RevNo	Revision note	Date	By	Checked
–	–	–	–	–

NIXIE[1:15] [12]
Z-COUNTER [5,6,7,8,9,10]
CONTROL [1,2,3,4,5,6,7,8,9,10]
ENCODED-FUNCTION [7,8,9]

0 = Key pressed (= 0V)
1 / x = No key (–12V)

Action \ Signal	SELREG1	SELREG2	KY(ADD/SUB)	KY(SUB)	KY(MUL)	KY(DIV)	KY(+–)	KY(EQU)	ANYREGX	FNCTKEY
Any key Reg 1	0	1	1	1	1	1	1	1	1	0
Any key Reg 2	1	0	1	1	1	1	1	1	1	0
Any key Reg 3	0	0	1	1	1	1	1	1	1	0
Any Reg + Key	x	x	0	1	1	1	1	1	1	0
Any Reg – Key	x	x	1	0	1	1	1	1	1	0
Any Reg ✱Key	x	x	1	1	1	1	1	1	0	0
Any Reg ▽Key	x	x	1	1	1	1	1	1	1	0
Add	1	1	0	1	1	1	0	1	1	0
Subtract	1	1	0	0	1	1	0	1	1	0
Multiply	1	1	1	1	0	1	1	1	1	0
Divide	1	1	1	1	1	0	1	1	1	0
Raise	1	1	1	1	0	1	1	0	1	0
Negate	1	1	1	0	1	1	1	1	0	0
Equal	1	1	1	1	1	1	1	0	1	0

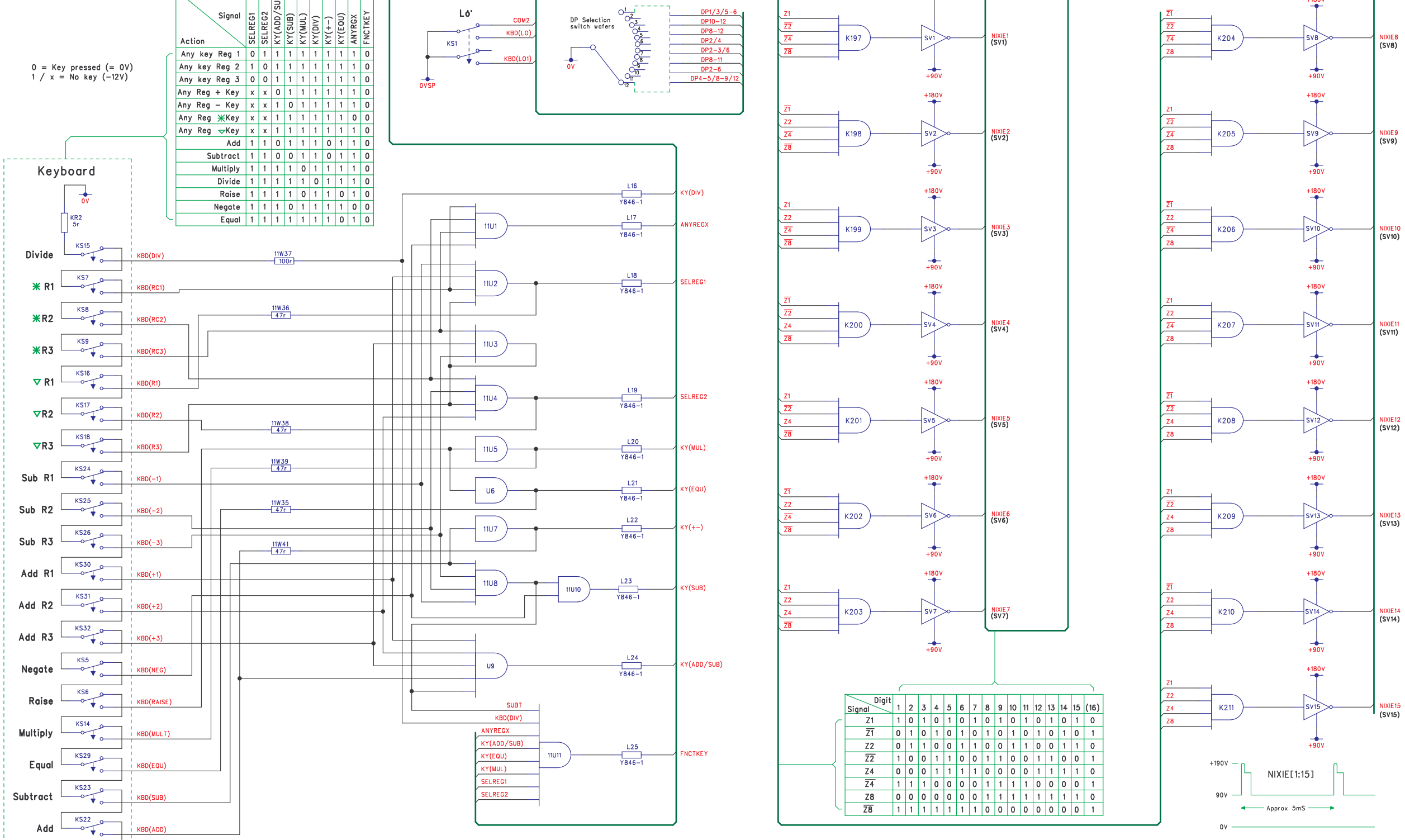

Signal \ Digit	1	2	3	4	5	6	7	8	9	10	11	12	13	14	15	(16)
Z1	1	0	1	0	1	0	1	0	1	0	1	0	1	0	1	0
$\overline{Z1}$	0	1	0	1	0	1	0	1	0	1	0	1	0	1	0	1
Z2	0	1	1	0	0	1	1	0	0	1	1	0	0	1	1	0
$\overline{Z2}$	1	0	0	1	1	0	0	1	1	0	0	1	1	0	0	1
Z4	0	0	0	1	1	1	1	0	0	0	0	1	1	1	1	0
$\overline{Z4}$	1	1	1	0	0	0	0	1	1	1	1	0	0	0	0	1
Z8	0	0	0	0	0	0	0	1	1	1	1	1	1	1	1	0
$\overline{Z8}$	1	1	1	1	1	1	1	0	0	0	0	0	0	0	0	1

Keys are ordered for this diagram, not as they are wired, see circuit.

Negative logic referenced to 0V – Logical 1 = –12v, logical 0 = 0v

© 2008 Mike Hatch. (www.soemtron.org)

DM Associates
33, Northbrook Road
Aldershot, Hampshire. GU11 3HE
Email: mike@soemtron.org
www.soemtron.org

	Name	Date
Drawn	MD Hatch	4/7/2008
Checked	–	–

Pcb Dwg # =

Scale	Nts	Title	Soemtron ETR 220 Calculator #11 – Digit Decode & Anode Drive Logic Diagram
Sheet	11		
Next Sheet	12		
Drawing Number	Soemtron 220 Logic	A2	Issue A