RevNo	Revision note	Date	By	Checked
–	–	–	–	–

DIGIT-BUSS [1,3,4,9]

NIXIE[1:15] [11]

ENCODED-NUMBER [8,9]

0 = Key pressed (= 0V)
1 = no key (–12V)

X	0	1	2	3	4	5	6	7	8	9	Comma	Clear	Key / Code
1	1	0	1	0	1	0	1	0	1	0	1	1	NUM1
1	1	1	0	0	1	1	0	0	1	1	1	1	NUM2
1	1	1	1	1	0	0	0	0	1	1	0	1	NUM4
1	1	1	1	1	1	1	1	1	0	0	0	1	NUM8
1	0	0	0	0	0	0	0	0	0	0	0	0	NUMKEYS
1	1	1	1	1	1	1	1	1	1	1	1	0	KYCLER

Keys are ordered for this diagram, not as they are wired, see circuit.

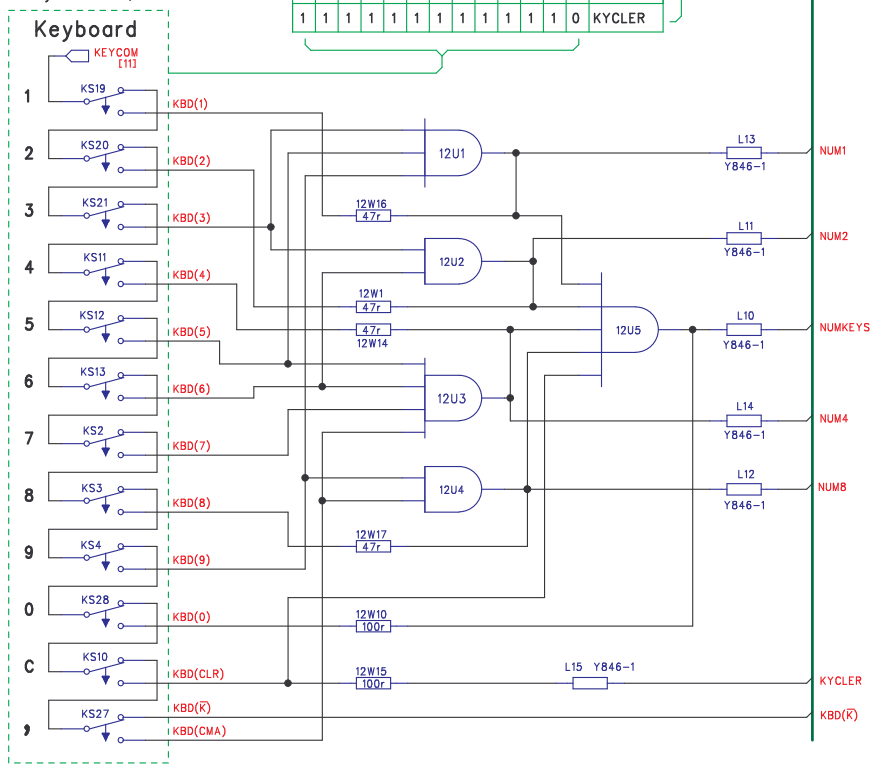

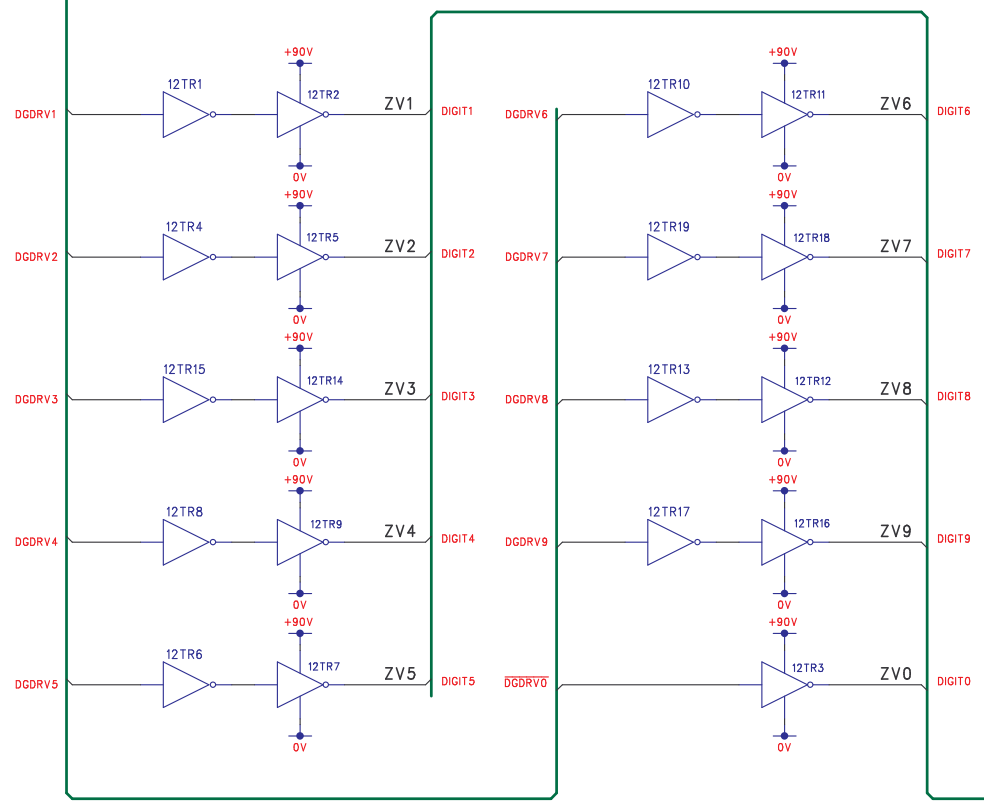

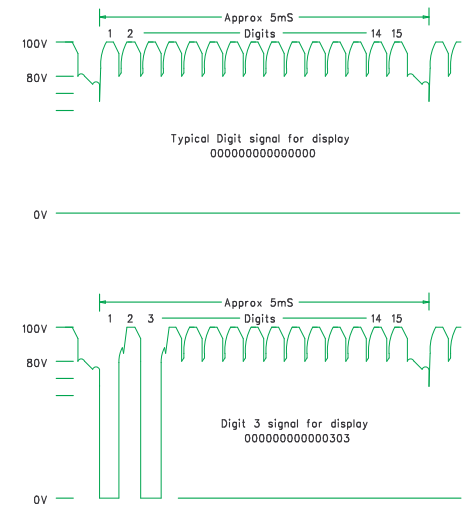

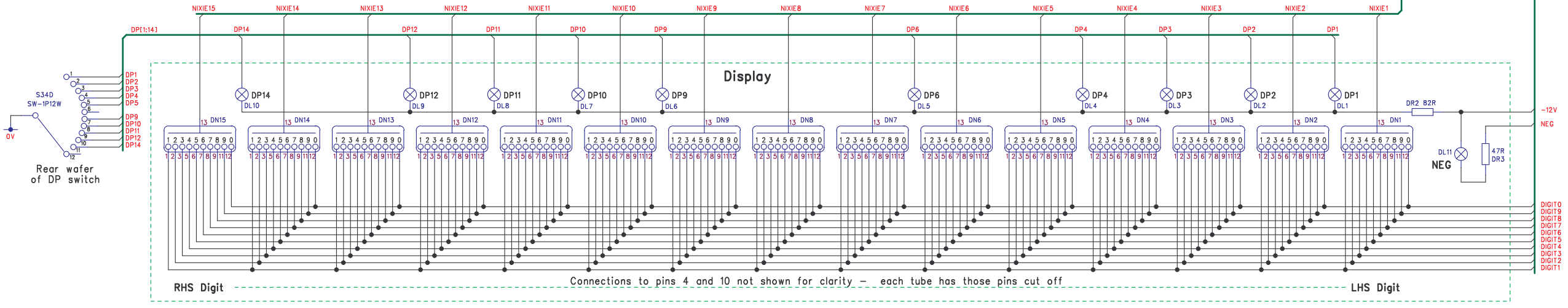

Negative logic referenced to 0V – Logical 1 = –12v, logical 0 = 0v

© 2008 Mike Hatch. (www.soemtron.org)

DM Associates
33, Northbrook Road
Aldershot, Hampshire. GU11 3HE
Email: mike@soemtron.org
www.soemtron.org

	Name	Date
Drawn	MD Hatch	10/7/2008
Checked	–	–

Pcb Dwg # =

Scale	Nts
Sheet	12
Next Sheet	13
Drawing Number	Soemtron 220 Logic

Title: Soemtron ETR 220 Calculator
#12 – Cathode Drive & Kbd # Encode
Logic Diagram

A2 | Issue | A