Comp side
Solder side - 4636 05-224-7002-5 c
Date coded - 22/73

RevNo	Revision note	Date	By	Checked
-	-	-	-	-

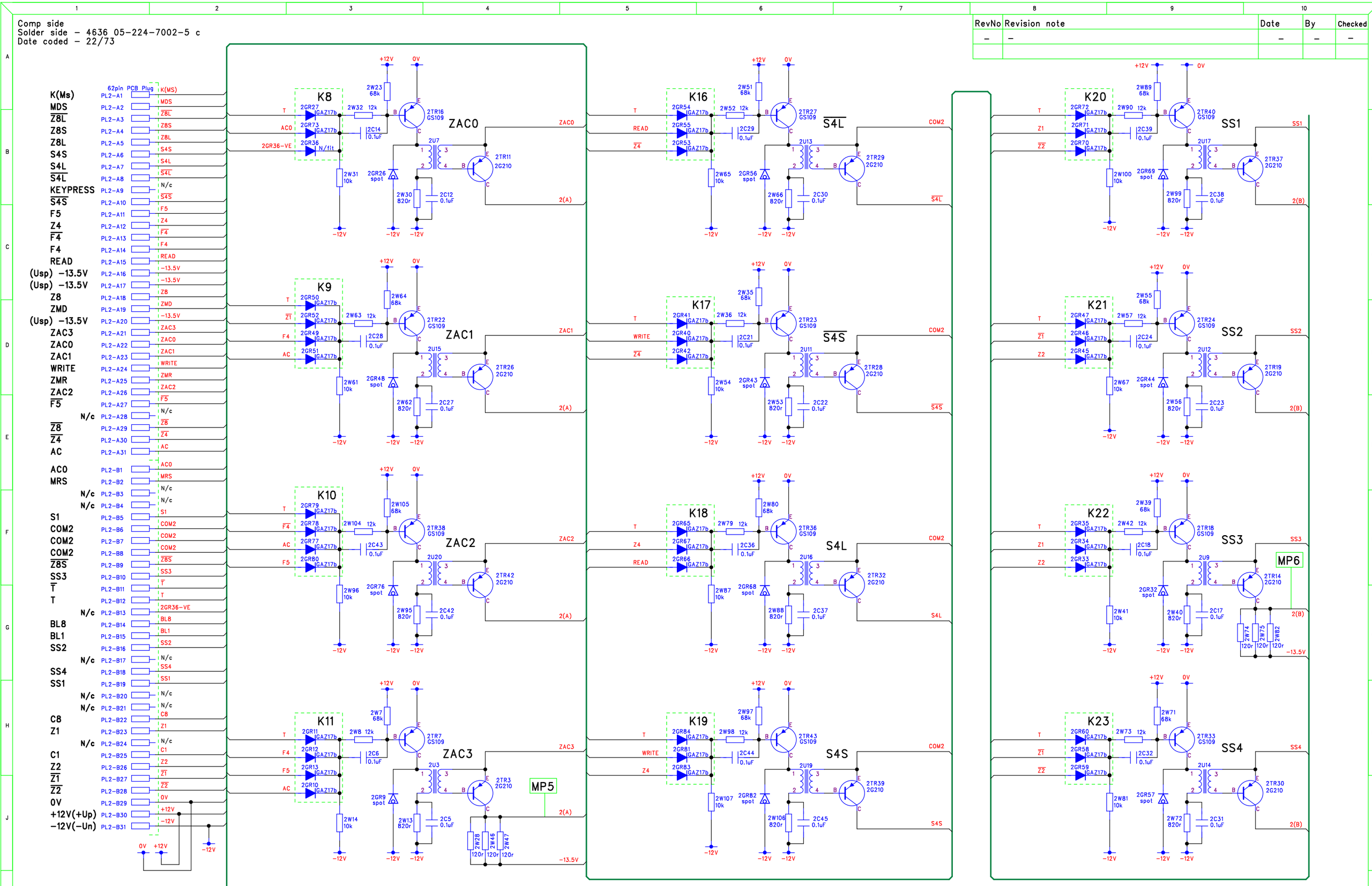

These diagrams are referenced to 0V - Logical 1 = +12v, logical 0 = 0v
Signal names are from German logic diagrams which reference +12V - Logical 1 = 0V, 0 = +12V

© 2008 Mike Hatch. (www.soemtron.org)

DM Associates
33, Northbrook Road
Aldershot, Hampshire. GU11 3HE
Email: mike@soemtron.org
www.soemtron.org

Pcb Dwg # =			Scale	Nts
	Name	Date	Sheet	5
Drawn	MD Hatch	12/5/2008	Next Sheet	6
Checked	-	-	Drawing Number	Soemtron 220

Title: Soemtron ETR 220 Calculator
Core Drivers
BOARD 2

A2 Issue A

Solder side – 05-224-7002-5c

RevNo	Revision note	Date	By	Checked
–	–	–	–	–

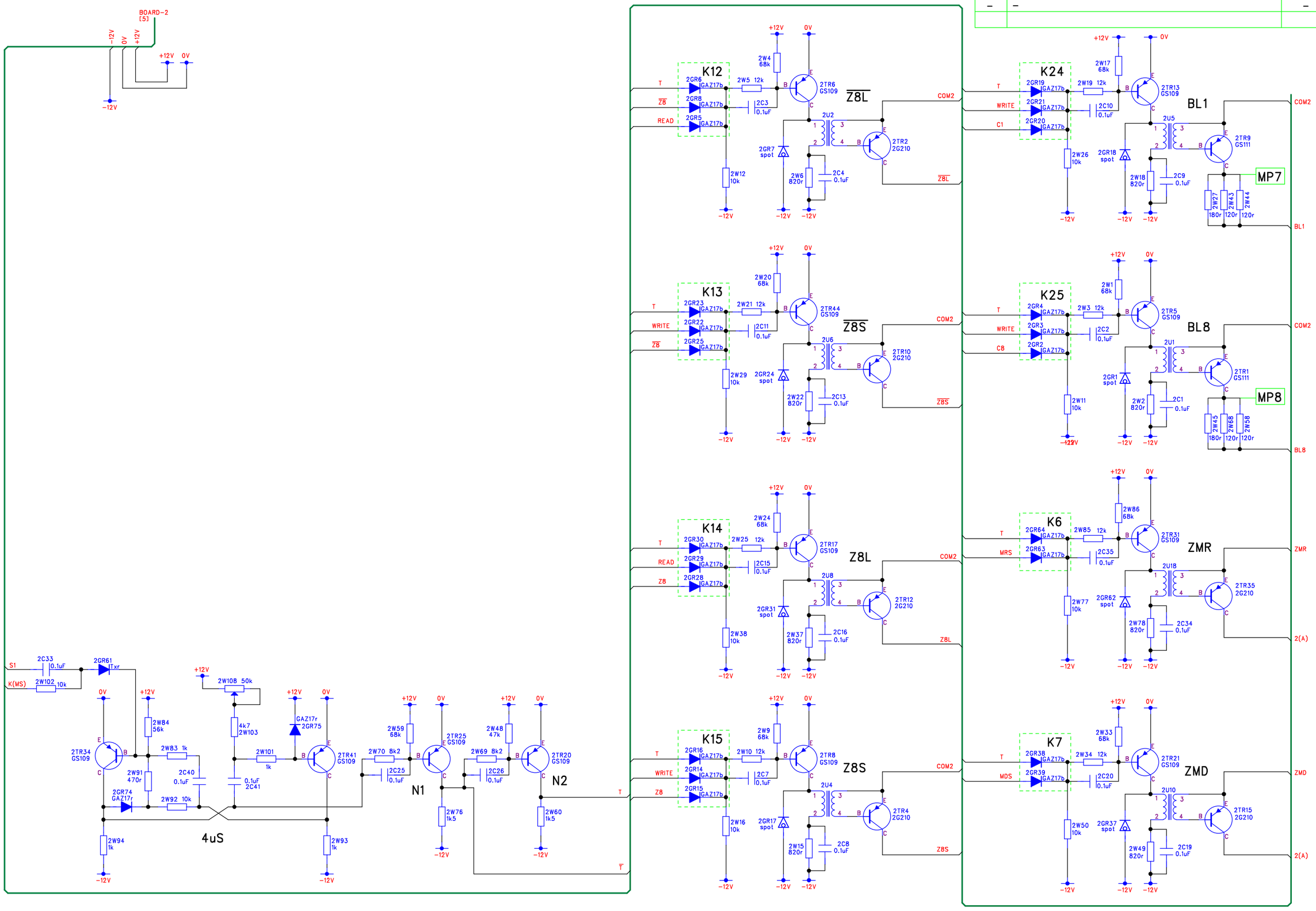

These diagrams are referenced to 0V – Logical 1 = –12v, logical 0 = 0V

© 2008 Mike Hatch. (www.soemtron.org)

DM Associates
33, Northbrook Road
Aldershot, Hampshire. GU11 3HE
Email: mike@soemtron.org
www.soemtron.org

Pcb Dwg # =			Scale	Nts
	Name	Date	Sheet	6
Drawn	MD Hatch	12/5/2008	Next Sheet	7
Checked	–	–	Drawing Number	Soemtron 220

Title: Soemtron ETR 220 Calculator
Core Drivers
BOARD 2 Sheet 2

A2 | Issue | A