Comp side – 05-220-7004-3 0h
Solder side – 3036 05-220-7004-3 0i
Date coded – 17/73

RevNo	Revision note	Date	By	Checked
–	–	–	–	–

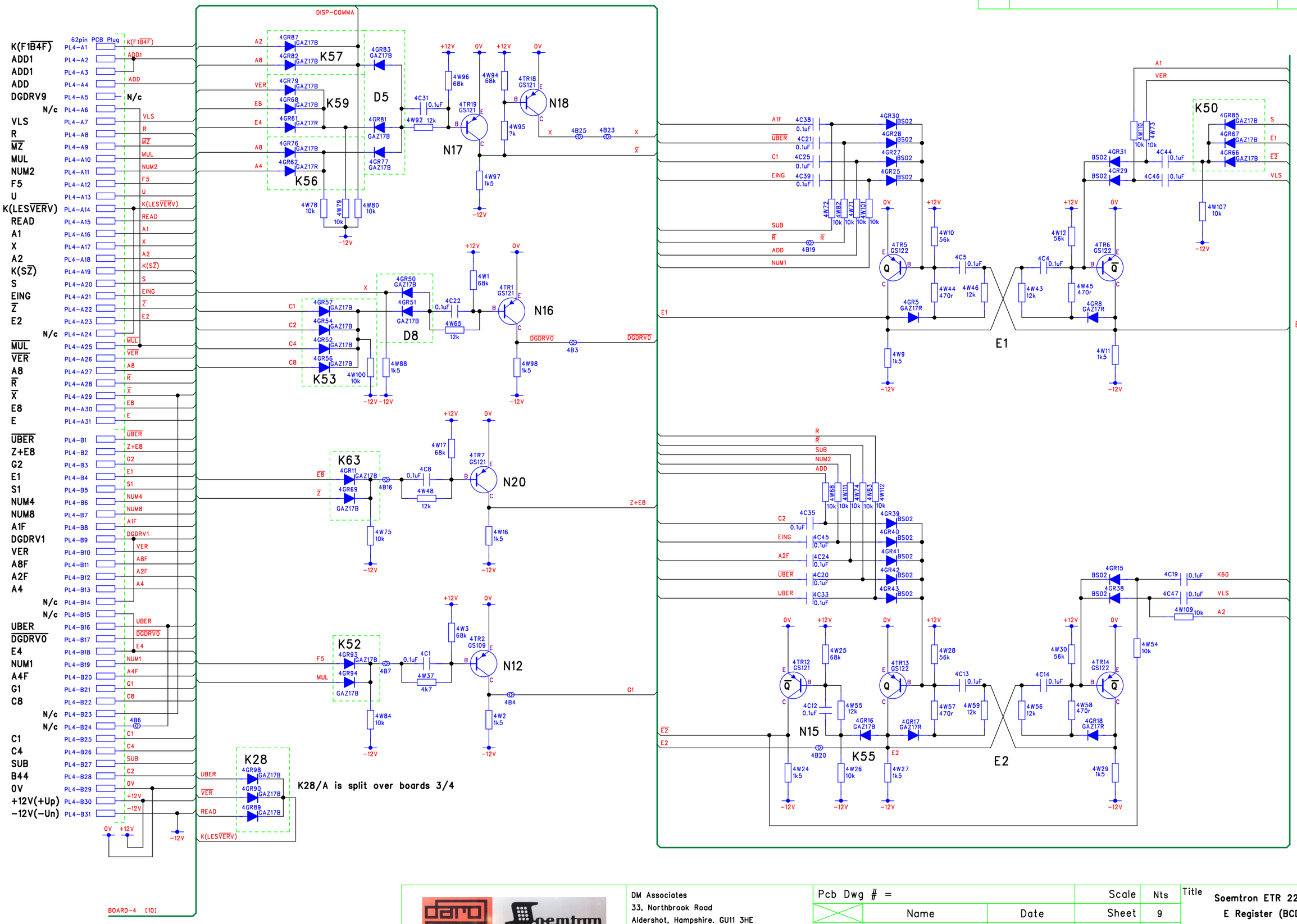

These diagrams are referenced to 0V – Logical 1 = –12v, logical 0 = 0V

DM Associates
33, Northbrook Road
Aldershot, Hampshire. GU11 3HE
Email: mike@soemtron.org
www.soemtron.org

© 2008 Mike Hatch. (www.soemtron.org)

Pcb Dwg # =			Scale	Nts	Title	Soemtron ETR 220 Calculator E Register (BCD) + UBER BOARD 4
	Name	Date	Sheet	9		
Drawn	MD Hatch	–	Next Sheet	10		
Checked	–	–	Drawing Number	Soemtron 220	A2	Issue A

RevNo	Revision note	Date	By	Checked
–	–	–	–	–

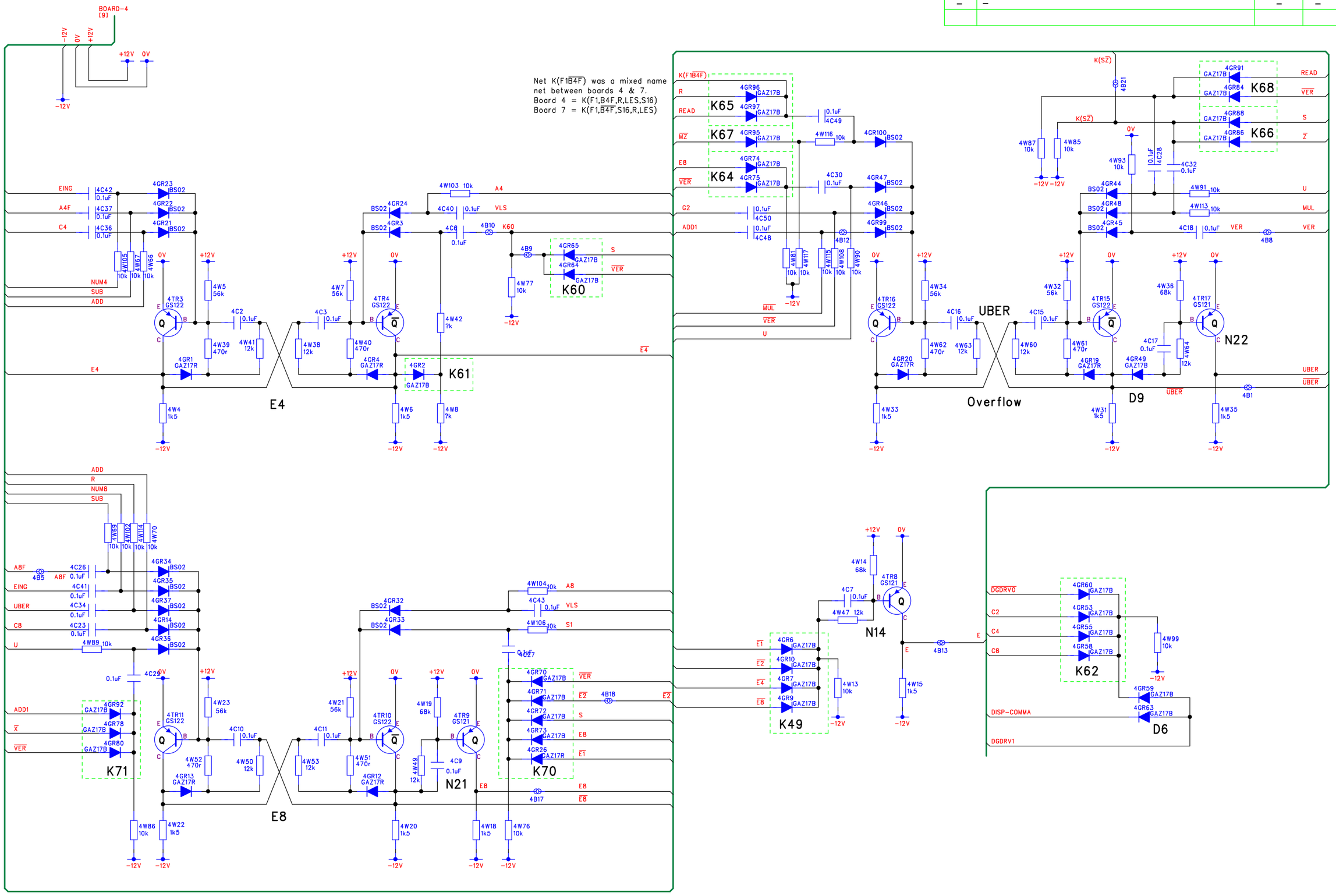

These diagrams are referenced to 0V – Logical 1 = –12v, logical 0 = 0V

© 2008 Mike Hatch. (www.soemtron.org)

DM Associates
33, Northbrook Road
Aldershot, Hampshire. GU11 3HE
Email: mike@soemtron.org
www.soemtron.org

Pcb Dwg # =			Scale	Nts
	Name	Date	Sheet	10
Drawn	MD Hatch	–	Next Sheet	11
Checked	–	–	Drawing Number	Soemtron 220

Title: Soemtron ETR 220 Calculator
E Register (BCD) + UBER
BOARD 4 Sheet 2

A2 | Issue | A