RevNo	Revision note	Date	By	Checked
–	–	–	–	–

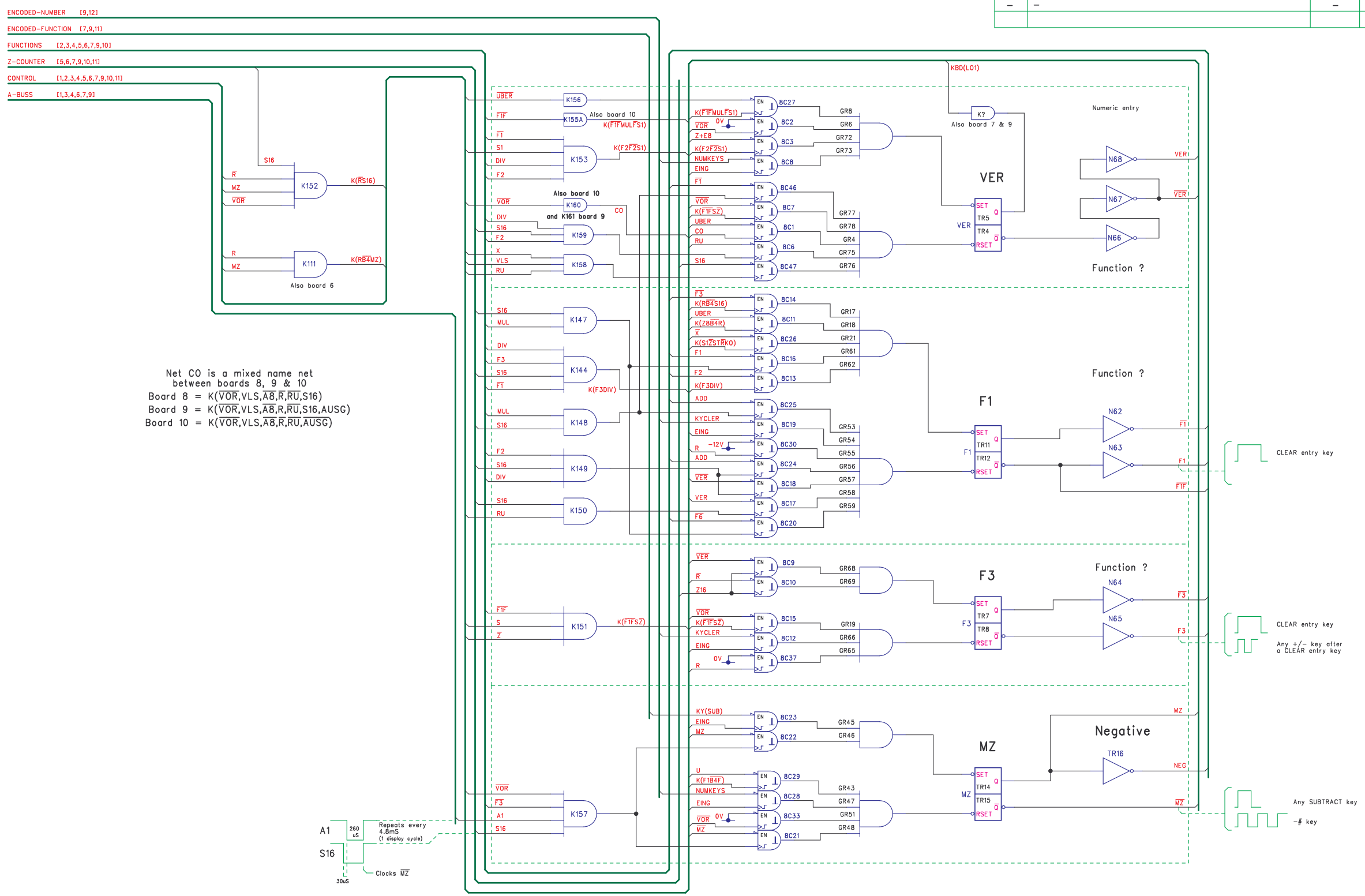

Negative logic referenced to 0V – Logical 1 = –12v, logical 0 = 0v

© 2009 Mike Hatch. (www.soemtron.org)

DM Associates
33, Northbrook Road
Aldershot, Hampshire. GU11 3HE
Email: mike@soemtron.org
www.soemtron.org

Pcb Dwg # =			Scale	Nts
	Name	Date	Sheet	8
Drawn	MD Hatch	10/9/2009	Next Sheet	9
Checked	–	–	Drawing Number	Soemtron 220 Logic A2 Issue A

Title: Soemtron ETR 220 Calculator
#8 – Function Latches F2, F3 + others
Logic Diagram