BULLETIN 280B
VOL. 2

TECHNICAL MANUAL
MODEL 35
AUTOMATIC SEND-RECEIVE
TELETYPEWRITER SET
(ASR)

TELETYPE®
CORPORATION
5555 TOUHY AVENUE, SKOKIE, ILLINOIS

INTRODUCTION

Bulletin 280B is a technical manual that provides general and specific technical information about the Model 35 Automatic Send-Receive Teletypewriter Set (ASR) and its component units.

The bulletin is made up of two volumes. Volume 1 contains descriptions and principles of operation, lubrication, and disassembly and reassembly. Volume 2 contains adjustments.

Each volume is made up of a group of appropriate independent sections. The sections are complete within themselves; they are separately identified by title and section number and the pages of each section are numbered consecutively, independent of other sections.

The identifying number of a section, a 9-digit number, appears at the top of each page of the section, in the left corner of the left-hand pages and the right corner of the right-hand pages. The sections are placed in the manual in ascending numerical order.

To locate specific information refer to the table of contents on the following page. Find the name of the involved component in column one and the title of the section in column two. The correct 9-digit section number will then be found in column three. Turn to page one of the section indicated, where the contents of that section will be found (except where a section is small and does not require a listing of contents).

The sections comprising this bulletin are now stocked separately and may be individually ordered if the entire bulletin is not needed.

TABLE OF CONTENTS

FILING INSTRUCTIONS

1. The following filing instructions apply to changes sent to the field.
2. Asterisks (*) in the table of contents indicate changes.
3. When the issue of a section changes, replace the old issue with the attached new one.
4. In the case of addendums, turn to the affected section and follow the instructions on the first page of the attached addendum.
5. Replace the old table of contents with this new one.

Note: For information on motor units, see Bulletin 295B.

35 TYPING UNIT (LP)

ADJUSTMENTS

CONTENTS PAGE

CONTENTS PAGE

CONTENTS PAGE

CONTENTS PAGE

CONTENTS PAGE

1. GENERAL

1.01 This section contains the specific requirements and adjustments for the 35 typing unit.

1.02 This section has been revised to include recent engineering changes and additions, and to rearrange the text, so as to bring the section generally up-to-date. Since this is a general revision, marginal arrows used to indicate changes have been included.

CAUTION: REMOVE POWER FROM SET OR UNIT BEFORE MAKING ADJUSTMENTS.

1.03 The adjustments in this section are arranged in a sequence that should be followed if a complete readjustment of the unit is undertaken. A complete adjusting procedure should be read before attempting to make the adjustment. After an adjustment is completed, be sure to tighten any nuts or screws that may have been loosened, unless otherwise instructed.

1.04 The adjusting illustrations indicate tolerances, positions of moving parts, spring tensions, and the angle at which scales should be applied. The tools required to make adjustments and check spring tensions are not supplied with the equipment, but are listed in Section 570-005-800TC. Springs which do not meet the requirements, and for which there are no adjusting procedures, should be discarded and replaced by new springs.

1.05 References made to left, right, up, down, front, rear, etc, apply to the unit in its normal operating position as viewed from the front.

1.06 When a requirement calls for a clutch to be disengaged, the clutch shoe lever must be fully latched between its trip lever and latch-lever so that the clutch shoes release their tension on the clutch drum. When engaged, the clutch shoe lever is unlatched and the clutch shoes are wedged firmly against the clutch drum.

Note: When the main shaft is rotated by hand, the clutch does not fully disengage upon reaching its stop position. In order to relieve drag and permit the main shaft to rotate freely, apply pressure on the lug of the clutch disc with a screwdriver to cause it to engage its latch lever and fully disengage the clutch.

1.07 To manually operate the typing unit proceed as follows.

(a) Attach the TP312709 armature clip to the selector magnet armature by carefully placing the spring loop over the magnet terminal insulator. Press down to engage the hook of the clip on the underside of the armature and release. The spring tension of the armature clip will hold the selector armature in the marking (attracted) position.

(b) While holding the selector magnet armature operated by means of the armature clip, use the handwheel, included with the special tools for servicing 28 teletypewriter apparatus, to manually rotate the main shaft in a counterclockwise direction until all the clutches are brought to their disengaged position.

(c) Fully disengage all clutches in accordance with 1.06, Note.

(d) Release the selector magnet armature momentarily to permit the selector clutch to engage.

(e) Rotate the main shaft slowly until all the pushlevers have fallen to the left of their selecting levers.

(f) Strip the pushlevers from their selector levers, which are spacing in the code combination of the character function that is being selected, and allow the pushlevers to move to the right.

(g) The pushlevers and the selector levers move in succession starting with the no. 1 to the no. 7; the no. 8 is always marking and is not equipped with a selector lever.

(h) Continue to rotate the main shaft until all operations initiated by the selector action clear through the unit.

1.08 Where adjustment instructions call for removal of components, assemblies, subassemblies or parts, all adjustments which the removal of these parts might facilitate should be made before the parts are replaced or as the equipment is reassembled. When a part mounted on shims is removed, the number of shims and their location should be noted so that the identical pile-up can be made when the part is replaced.

1.09 All electrical contact points should meet squarely. Contacts with the same diameter should not be out of alignment more than 25 percent of the contact diameter. Check contacts for pitting and corrosion and clean or burnish them before making specified adjustment or tolerance measurement. Avoid sharp kinks or bends in the contact springs.

CAUTION: KEEP ALL ELECTRICAL CONTACTS FREE OF OIL AND GREASE.

1.10 When making a complete adjustment of the unit, the following conditioning operations should be performed to prevent damage.

(a) Loosen the shift lever drive arm clamp screw (2.13).

(b) Move the right and left vertical positioning lever eccentric studs (2.32 and 2.33) in rocker shaft brackets to their lowest position.

(c) Loosen the two bearing stud mounting screws and the two connecting strip clamp screws in the horizontal positioning drive linkage (2.38).

(d) Loosen the clamp screws and move the reversing slide brackets to their uppermost position (2.37).

(e) Loosen the function reset bail blade mounting screws (2.36).

(f) Loosen the carriage return lever clamp screw (2.49).

(g) Loosen the clamp screws in the oscillating rail slide (2.44).

(h) Loosen the reversing slide adjusting stud (2.37).

(i) Loosen clamp and pivot screws on shift arm bearing bracket and move to extreme downward position (2.39).

(j) Loosen the clamp screw on the shift drive pawl operating bail (2.41).

(k) Check the following adjustments during each lubricating period.

(1) Printing carriage position (2.51).

(2) Printing hammer bearing stud (2.51).

(3) Printing hammer stop bracket. Also see Note in 2.54.

(4) Lower draw wire rope (2.45).

(5) Dashpot vent screw adjustment and check transfer slide for binds (2.50).

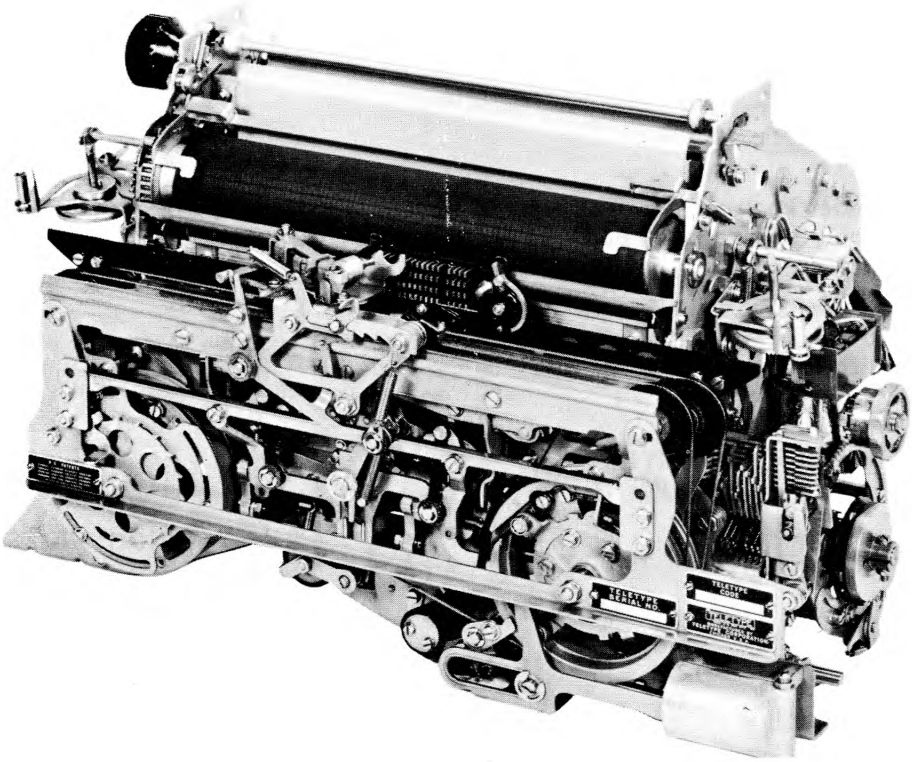

Figure 1 - 35 Typing Unit (Friction Feed)

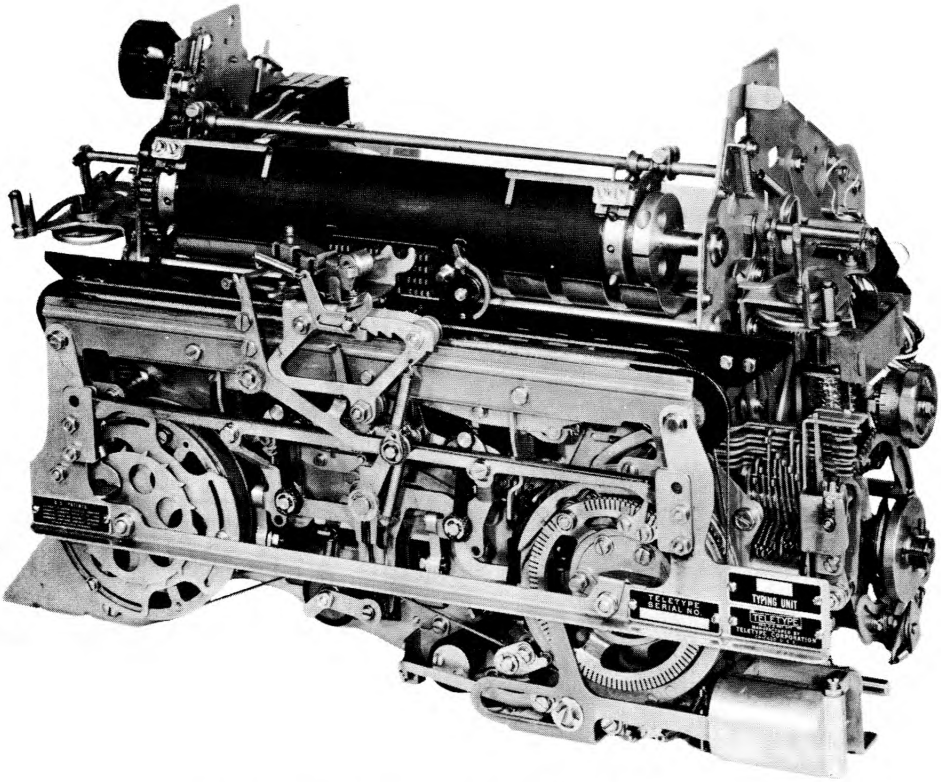

Figure 2 - 35 Typing Unit (Sprocket Feed)

2. BASIC UNITS

2.01 Selector Mechanism

(A) RANGEFINDER KNOB

Requirement

With rangefinder knob turned to either end of rack, and inner teeth of knob and teeth of sector assembly engaged, ℄ mark on scale should be within ±3 divisions of scribed line on rangefinder plate.

To Adjust

Loosen knob mounting nut and engage teeth of sector in position that most closely aligns the mark on the plate with the ℄ mark on the knob.

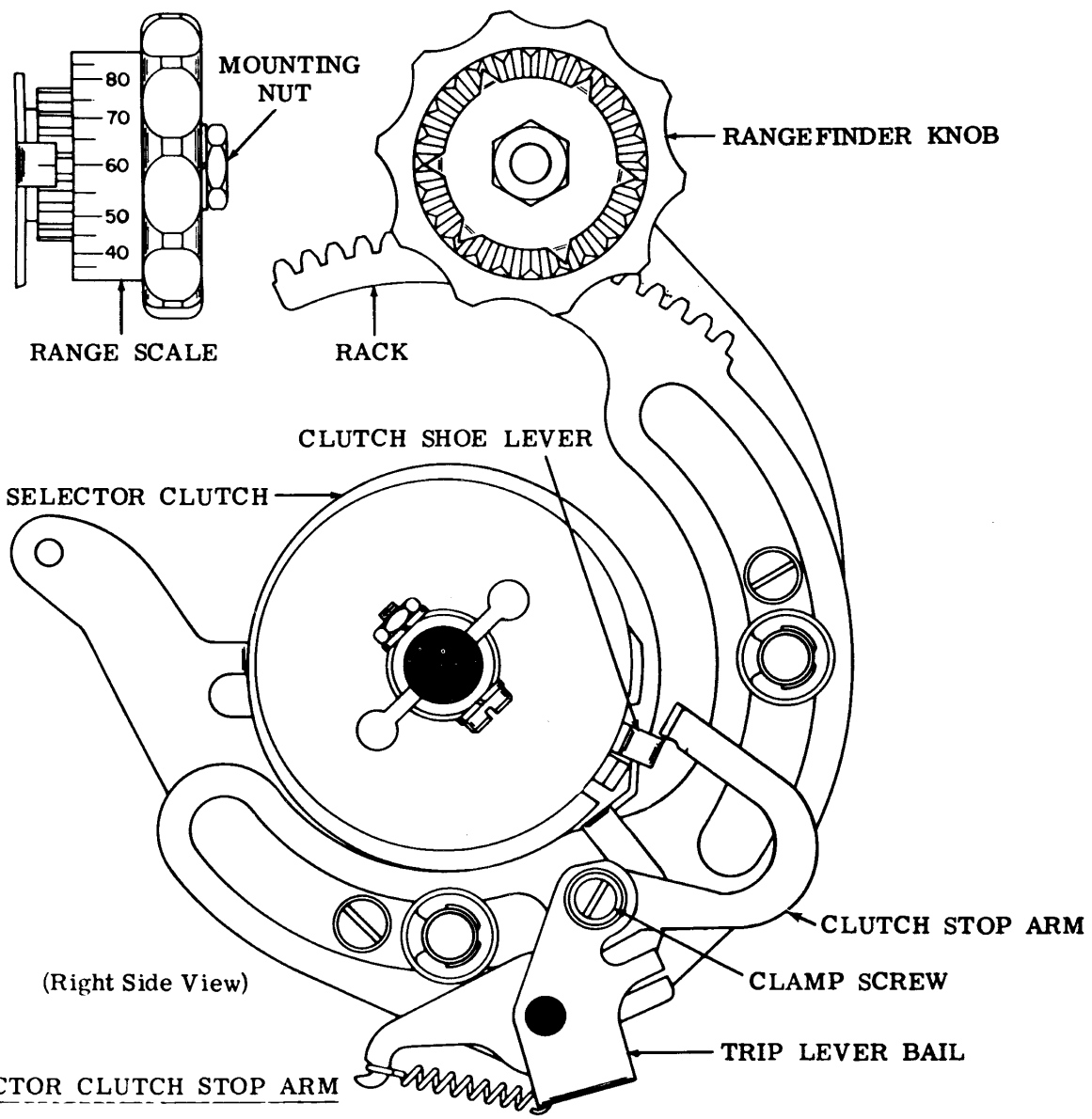

(Right Side View)

(B) SELECTOR CLUTCH STOP ARM

Requirement

Range scale set at 60. Selector clutch disengaged. Armature in marking position. Clutch stop arm should engage clutch shoe lever by approximately full thickness of clutch stop arm.

To Adjust

Position stop arm on trip lever bail with clamp screw loosened.

2.02 Selector Mechanism (continued)

Note: To facilitate making the following adjustments, remove the rangefinder and selector magnet assemblies. To insure better operation, pull a piece of bond paper between the armature and the pole pieces to remove any oil or foreign matter that may be present. Make certain that no lint or pieces of paper remain between the pole pieces and armature.

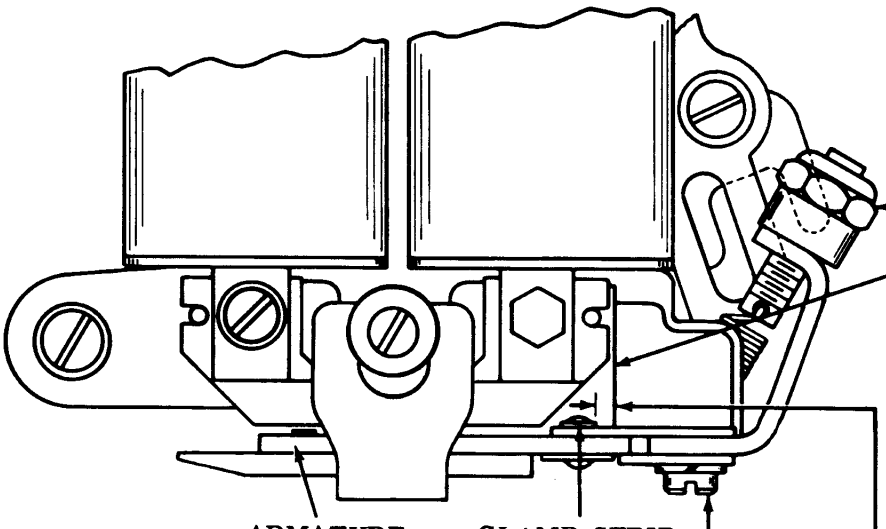

(Right Side View)

SELECTOR ARMATURE

Note: This requirement need not be made nor checked if the selector magnet bracket and receiving margin requirements are met.

(1) Requirement (Armature Clamp Strip)
Clearance between armature clamp strip and casting
Min 0.010 inch

To Adjust
Position armature spring adjusting nut to hold armature firmly against pivot edge of casting.

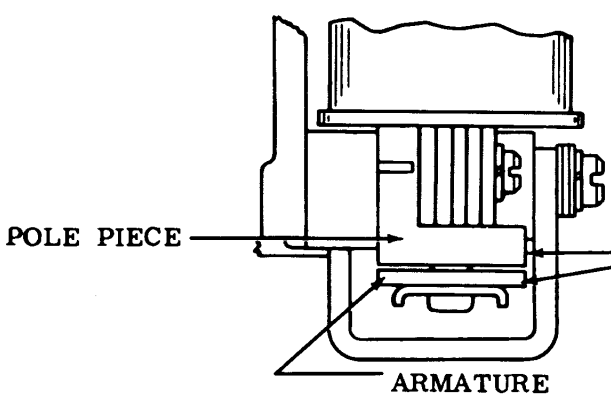

(Front View)

(2) Requirement (Armature Alignment)
Outer edge of armature should be flush within
Max 0.015 inch
with outer edge of pole pieces.

To Adjust
Position armature and backstop with mounting screws loosened.

2.03 Selector Mechanism (continued)

Note: Replace rangefinder and selector magnet assembly.

SELECTOR ARMATURE DOWNSTOP (PRELIMINARY)

Requirement
Magnet de-energized. Locklevers on high part of cam. With armature resting against downstop Min 0.030 inch---Max 0.035 inch clearance between end of armature and left edge of left pole piece.

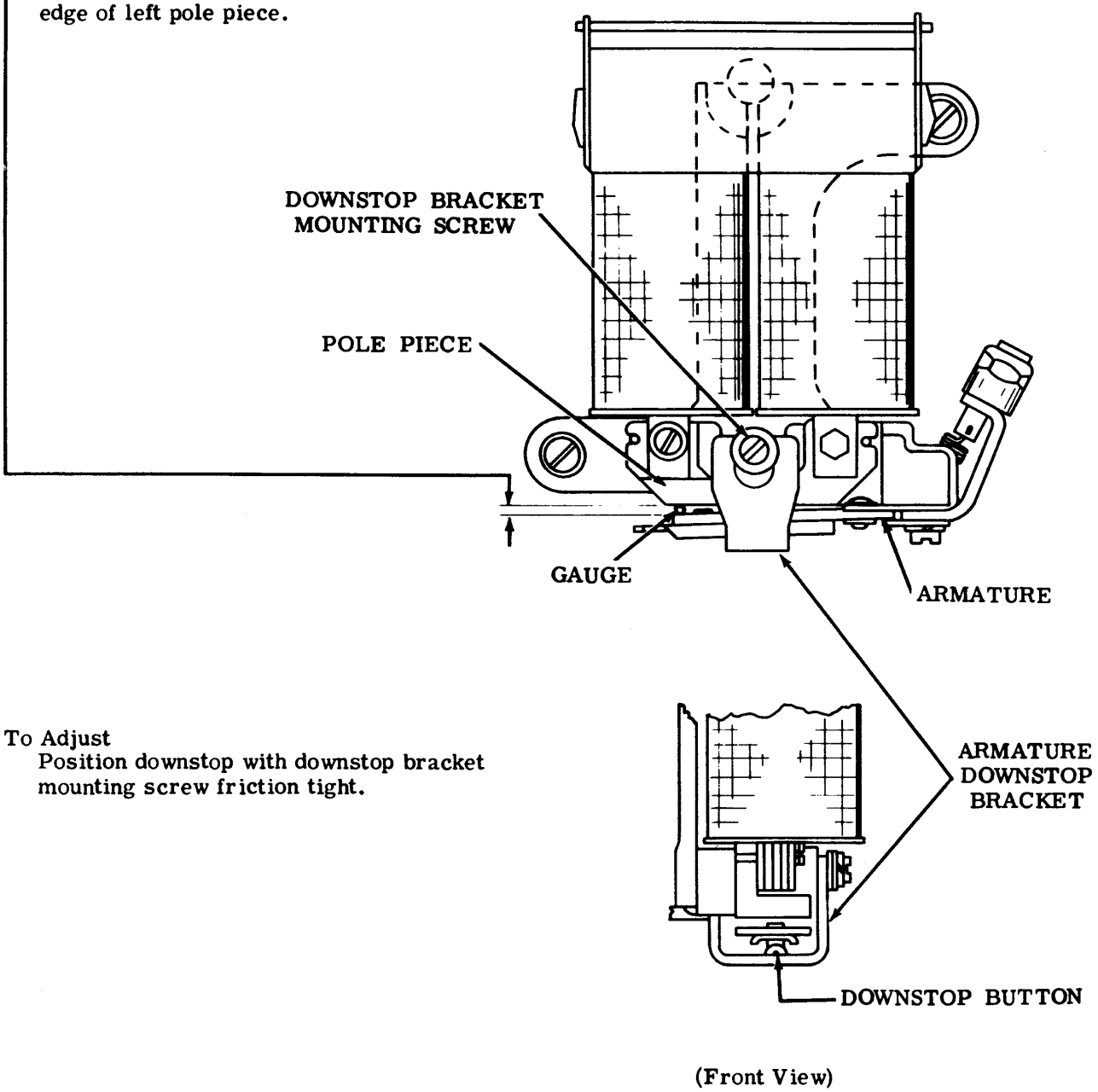

To Adjust
Position downstop with downstop bracket mounting screw friction tight.

2.04 Selector Mechanism (continued)

SELECTOR ARMATURE SPRING
(For Units Employing Selector Armature With Single Antifreeze Button Only)

Requirement (Preliminary)
With locklevers and start lever on high part of their cams, scale applied as nearly vertical as possible under end of armature extension. It should require the following tensions to move armature to marking position:

0.060 ampere – Min 2-1/2 oz---Max 3 oz
0.030 ampere – Min 1-1/2 oz---Max 2 oz
0.500 ampere – Min 4-1/2 oz---Max 5-1/2 oz

Note: This spring can be adjusted for maximum selector performance only when printer is connected to the specific circuit over which it is to operate under service conditions. Since there are several operating speeds and since circuits vary widely, it is impossible to adjust spring for maximum performance at the factory. The foregoing spring tension requirement is given to permit operation prior to measurement of receiving margins. Readjustment made to obtain satisfactory receiving margin should not be disturbed in order to meet requirements of this adjustment.

To Adjust
Position adjusting nut.

Requirement (Final)
See SELECTOR RECEIVING MARGIN adjustment (2.10).

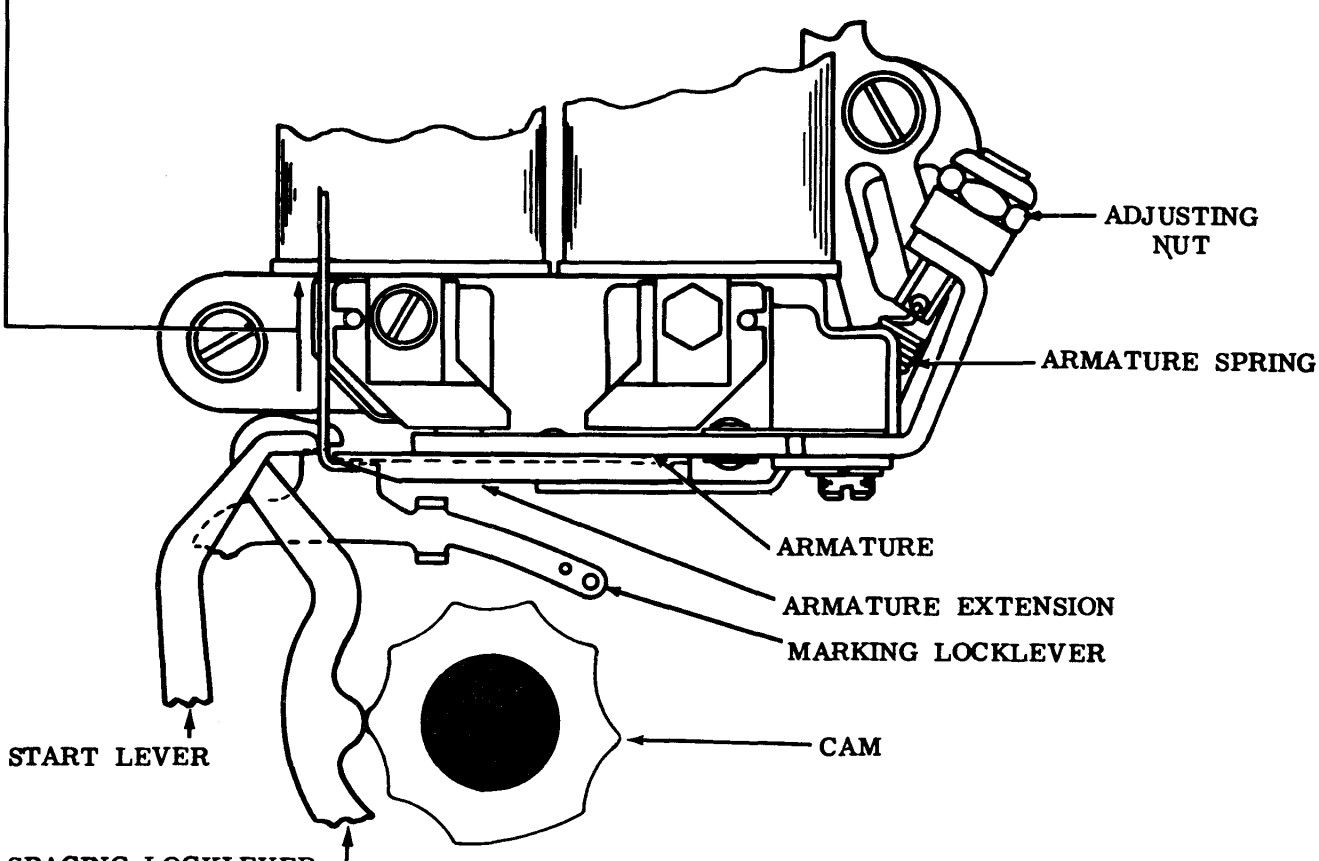

(Right Side View)

2.05 Selector Mechanism (continued)

SELECTOR ARMATURE SPRING (PRELIMINARY)
(For Units Employing Selector Armature With Two Antifreeze Buttons Only)

Requirement
With locklevers and start lever on high part of their cams, gram scale applied under end of armature extension, it should require approximately the following tensions to move the rear antifreeze button against the magnet core:

0.020 ampere — 14 grams
0.030 ampere — 18 grams
0.060 ampere — 21 grams
0.500 ampere — 28 grams

To Adjust
Position adjusting nut.

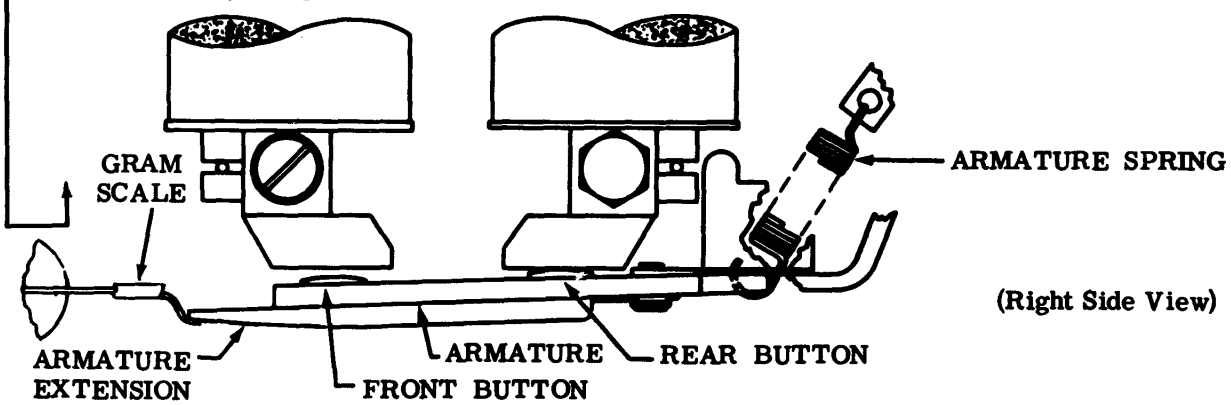

SELECTOR ARMATURE SPRING (FINAL)

Requirement
When a Distortion Test Set is available, the selector armature spring tension should be refined, if necessary, to obtain satisfactory receiving margins. The front antifreeze button must contact the magnet core when the magnet coils are energized.

(See SELECTOR RECEIVING MARGIN adjustment, 2.10.)

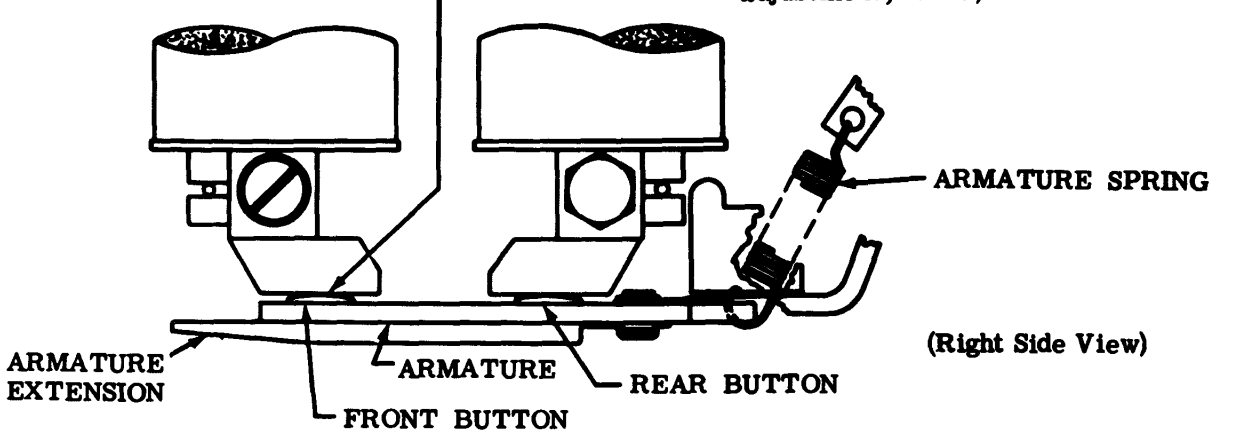

2.06 Selector Mechanism (continued)

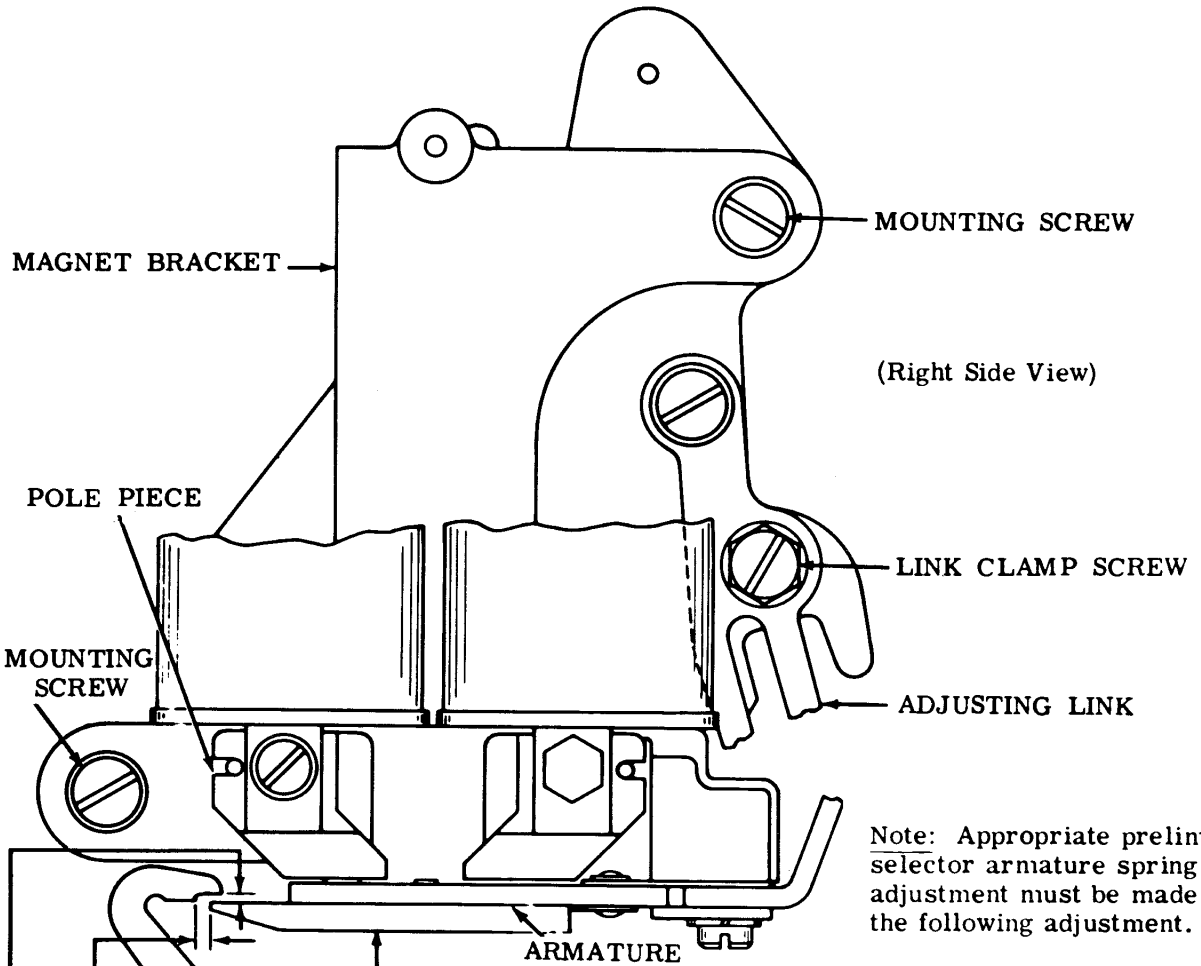

Note: Appropriate preliminary selector armature spring tension adjustment must be made before the following adjustment.

SELECTOR MAGNET BRACKET

(1) Requirement (For Units Employing Either One or Two Antifreeze Buttons)

Spacing locklever on each peak of cam. Armature in contact with front pole piece (magnet energized). Clearance between end of armature extension and shoulder on spacing locklever.

Min 0.020 inch---Max 0.035 inch

To Adjust

Loosen two magnet bracket mounting screws and adjusting link clamp screw. Position magnet bracket by means of adjusting link and tighten link clamp screw only.

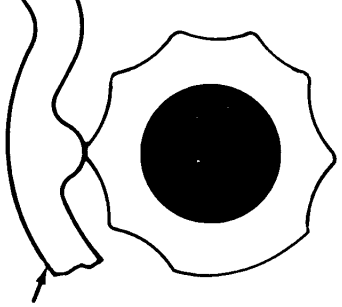

(2) Requirement

Armature in contact with front pole piece (magnet energized). Clearance between upper surface of armature extension and lower surface of spacing locklever when locklever is held downward.

Min some---Max 0.003 inch

To Adjust

Position upper end of magnet bracket. Tighten two magnet bracket mounting screws. Recheck Requirement (1).

2.07 Selector Mechanism (continued)

SELECTOR MAGNET BRACKET (VERTICAL ADJUSTMENT)

Requirement (For Units Employing Either One or Two Antifreeze Buttons)

Marking locklever on low of cam. Armature in contact with left pole piece (magnet energized). There should be some clearance between lower surface of armature extension and upper surface of marking locklever. Gauge by eye.

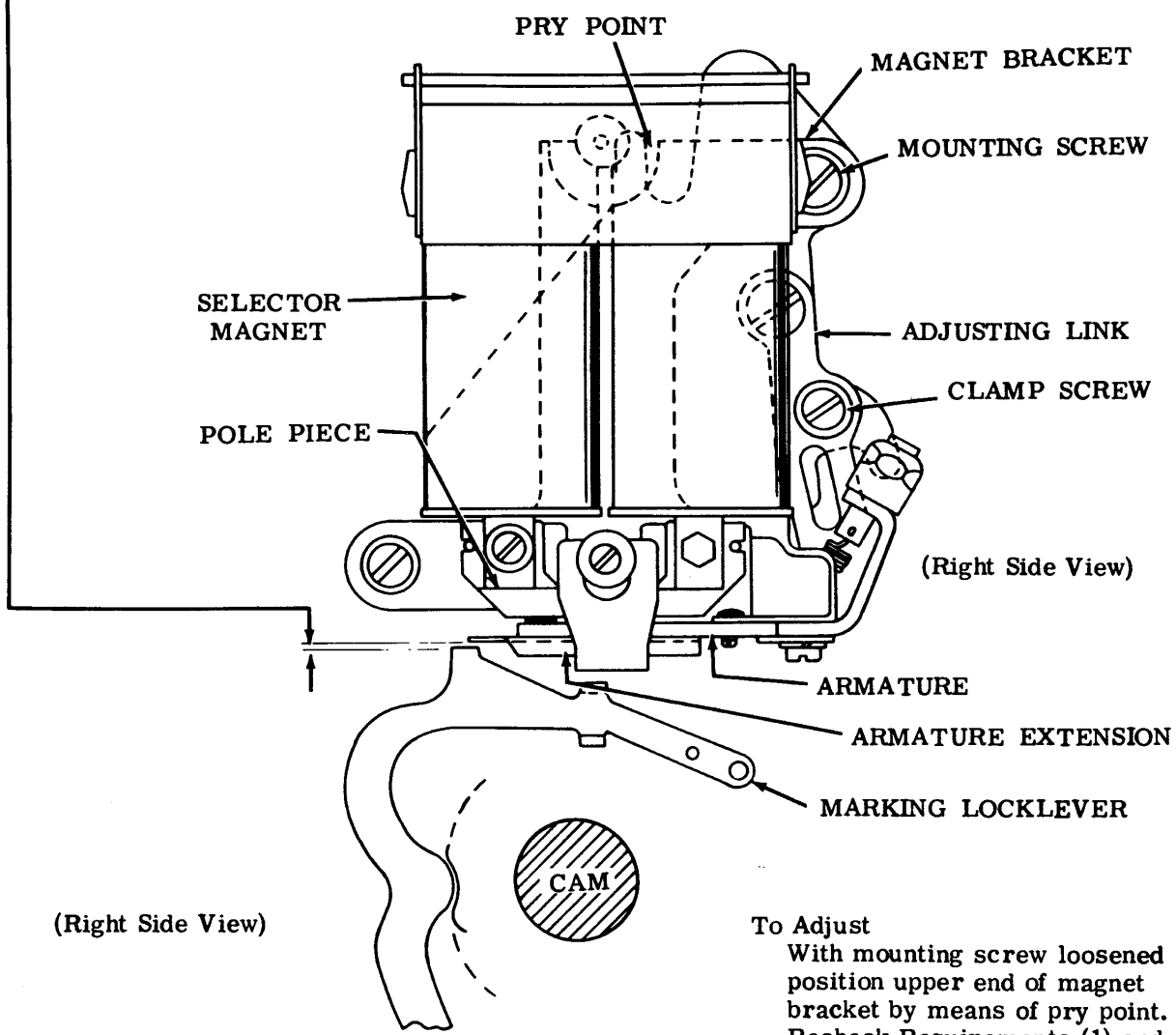

(Right Side View)

To Adjust
With mounting screw loosened position upper end of magnet bracket by means of pry point. Recheck Requirements (1) and (2) of SELECTOR MAGNET BRACKET (2.06).

2.08 Selector Mechanism (continued)

SELECTOR ARMATURE DOWNSTOP (FINAL)

Requirement

Magnet de-energized. Locklevers on low part of their cams

Min 0.005 inch---Max 0.015 inch clearance between top of armature extension and bottom of spacing locklever.

To Adjust

Refine SELECTOR ARMATURE DOWNSTOP (PRELIMINARY) (2.03).

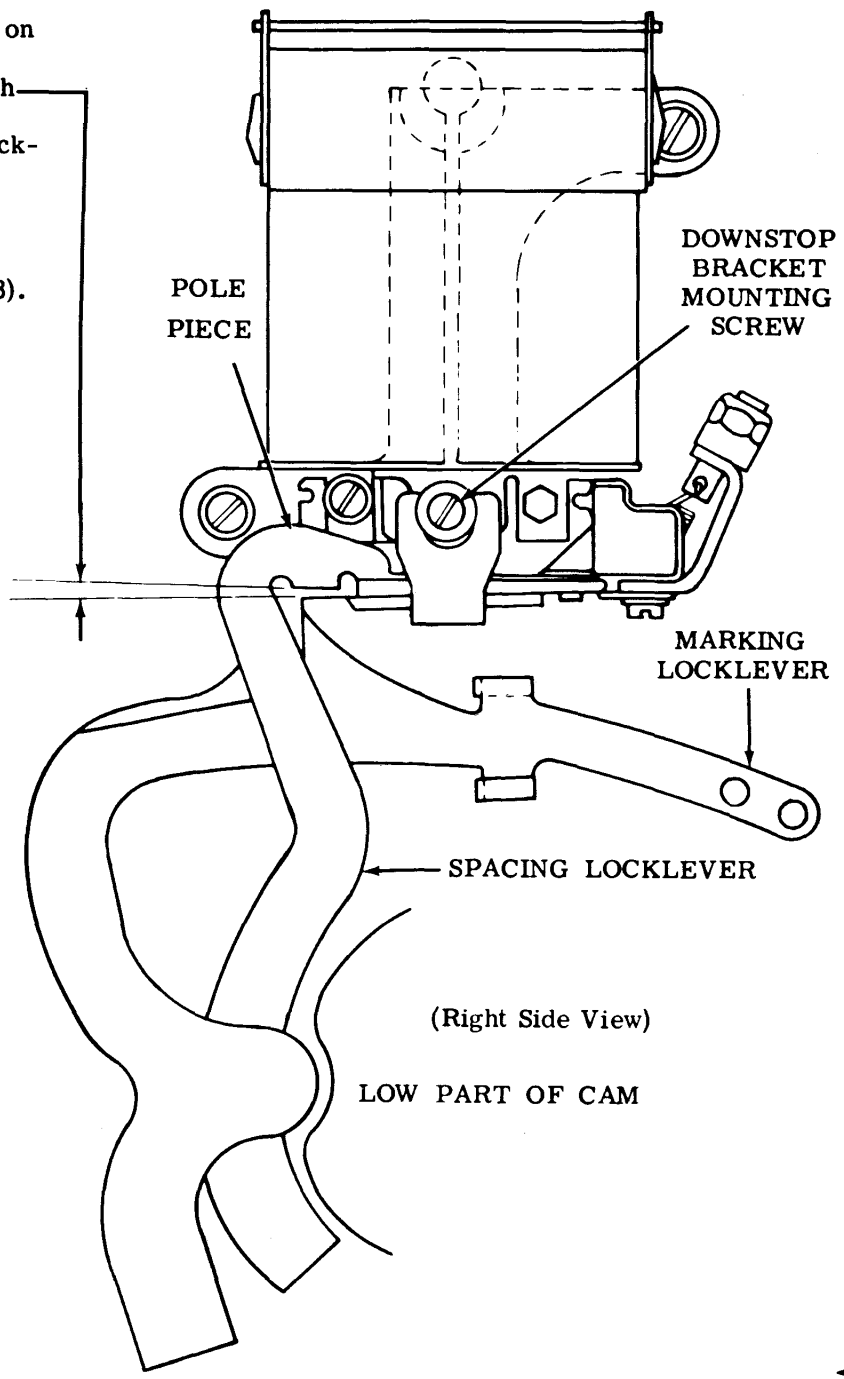

2.09 Selector Mechanism (continued)

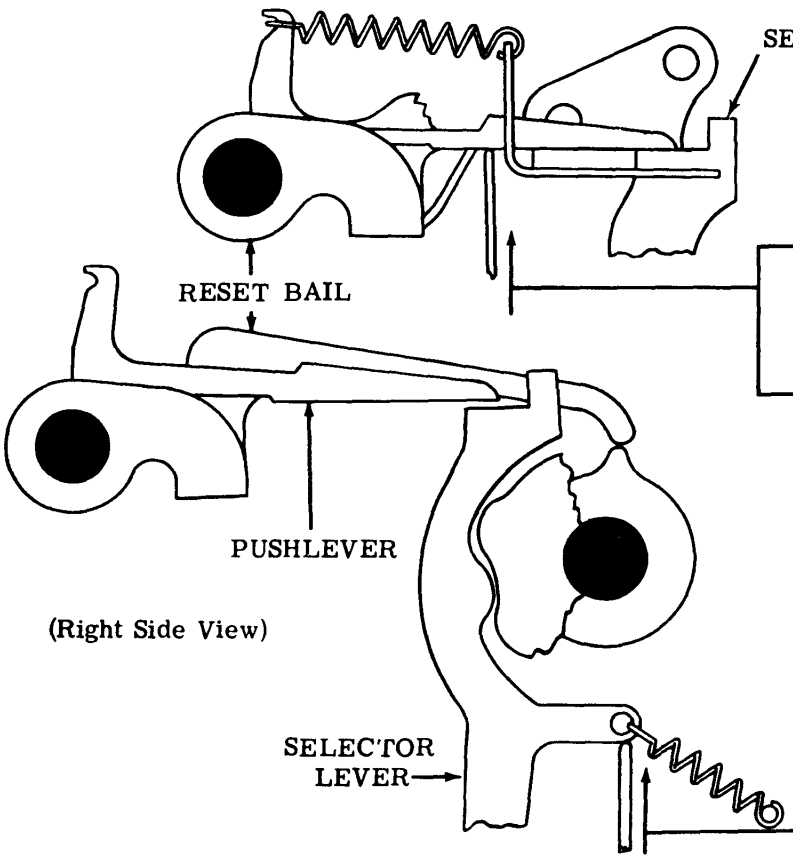

(Right Side View)

SELECTOR PUSHLEVER SPRING

Requirement
Pushlever in spacing position
Min 3/4 oz---Max 1-1/2 oz
to move pushlevers from selector levers on all except first pushlever in sequence of selection. It should require
Min 2 oz---Max 3 oz
to move this pushlever from its selector lever. This spring is copper color.

SELECTOR LEVER SPRING

Requirement
Typing unit upside down.
Reset bail on peak of its cam.
Min 1-1/2 oz---Max 3 oz
to start each lever moving.
If necessary, unhook start lever spring to check selector lever springs near the start lever spring.

SELECTOR CLUTCH DRUM

Requirement
Clutch latched in stop position. Cam-clutch assembly should have some endplay
Max 0.010 inch

To Adjust
Position the clutch drum on main shaft with mounting screw loosened. Tighten screw.

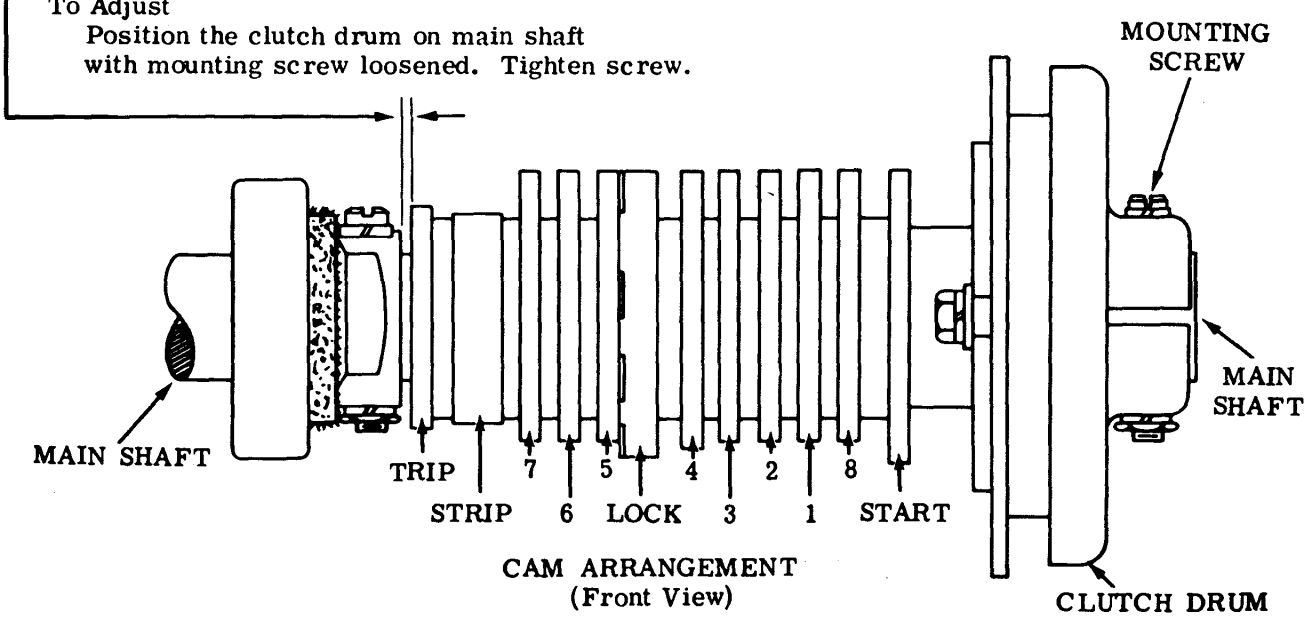

CAM ARRANGEMENT
(Front View)

2.10 Selector Mechanism (continued)

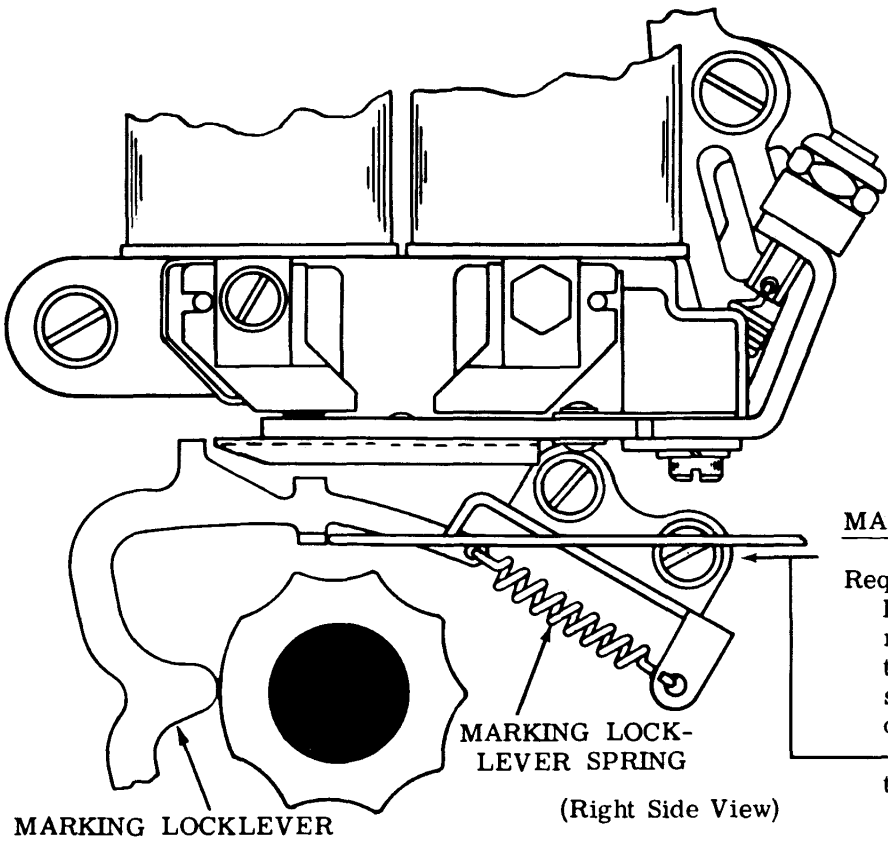

MARKING LOCKLEVER SPRING

Requirement
Rubout combination selected, main shaft rotated until selector clutch is disengaged. Push scale applied to lower extension of locklever.
Min 2 oz---Max 4 oz to start lever moving.

SELECTOR RECEIVING MARGIN

(1) Requirement (For Units Employing Armature With One Antifreeze Button)
When a signal Distortion Test Set is used for determining the receiving margins of the selector, and where the condition of the components is equivalent to that of new equipment, the range and distortion tolerances below should be met.

(2) Requirement (For Units Employing Armature With Two Antifreeze Buttons)
When a Distortion Test Set is available, the selector armature spring tension should be refined, if necessary, to obtain satisfactory receiving margins. The front antifreeze button must contact the magnet core when the magnet coils are energized.

To Adjust
Refine the SELECTOR ARMATURE SPRING adjustments (2.04, 2.05).

Selector Receiving Margin Minimum Requirements

Current	Speed in WPM	Points Range With Zero Distortion	Percentage of Marking and Spacing Bias	End Distortion Tolerated With Scale at Bias Optimum Setting
0.500 Amp (Windings Parallel)	100	72	38	35
0.060 Amp (Windings Parallel) (For LP821 Only)	100	72	35	33

2.11 Selector Mechanism (continued)

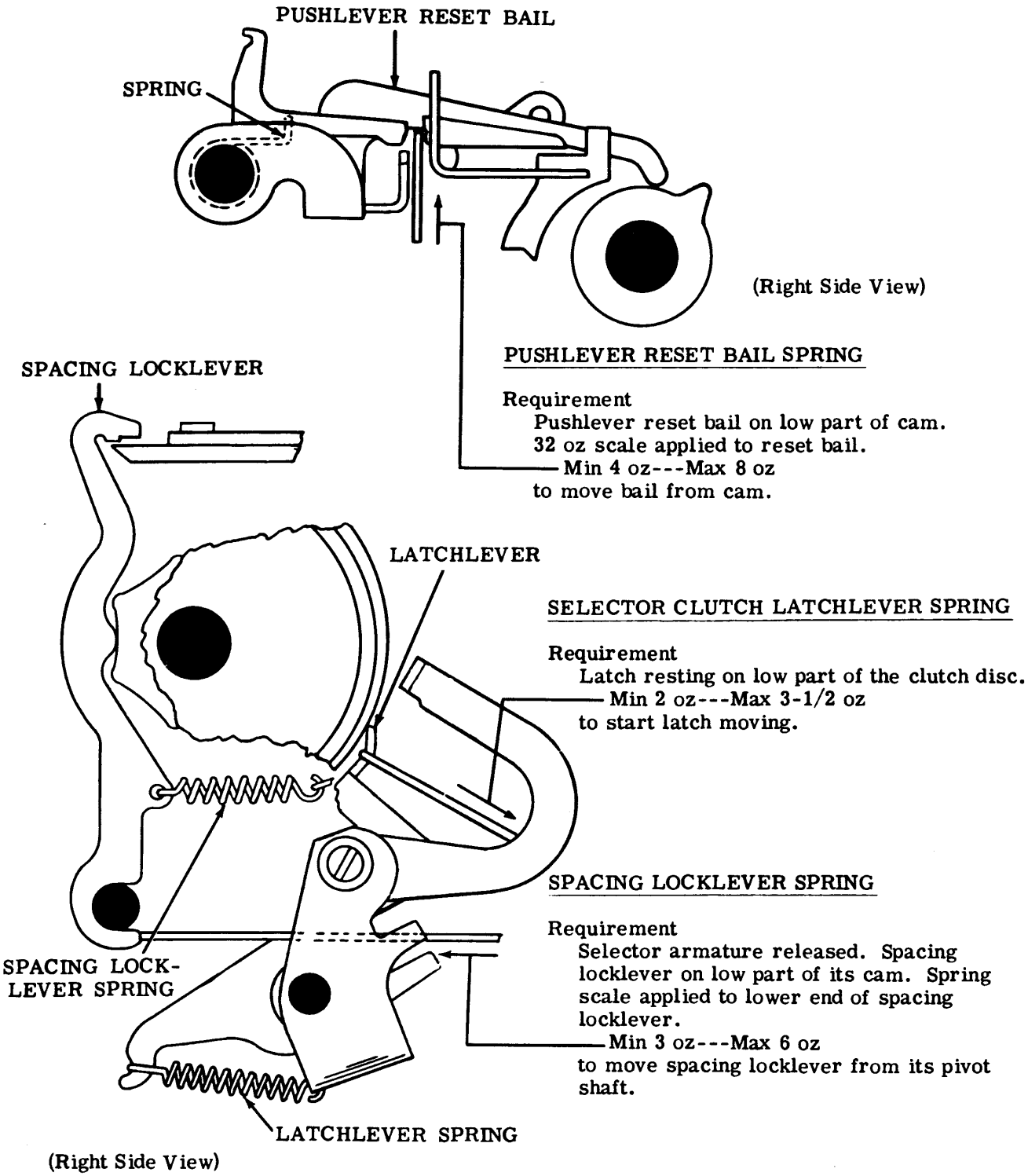

2.12 Selector Mechanism (continued)

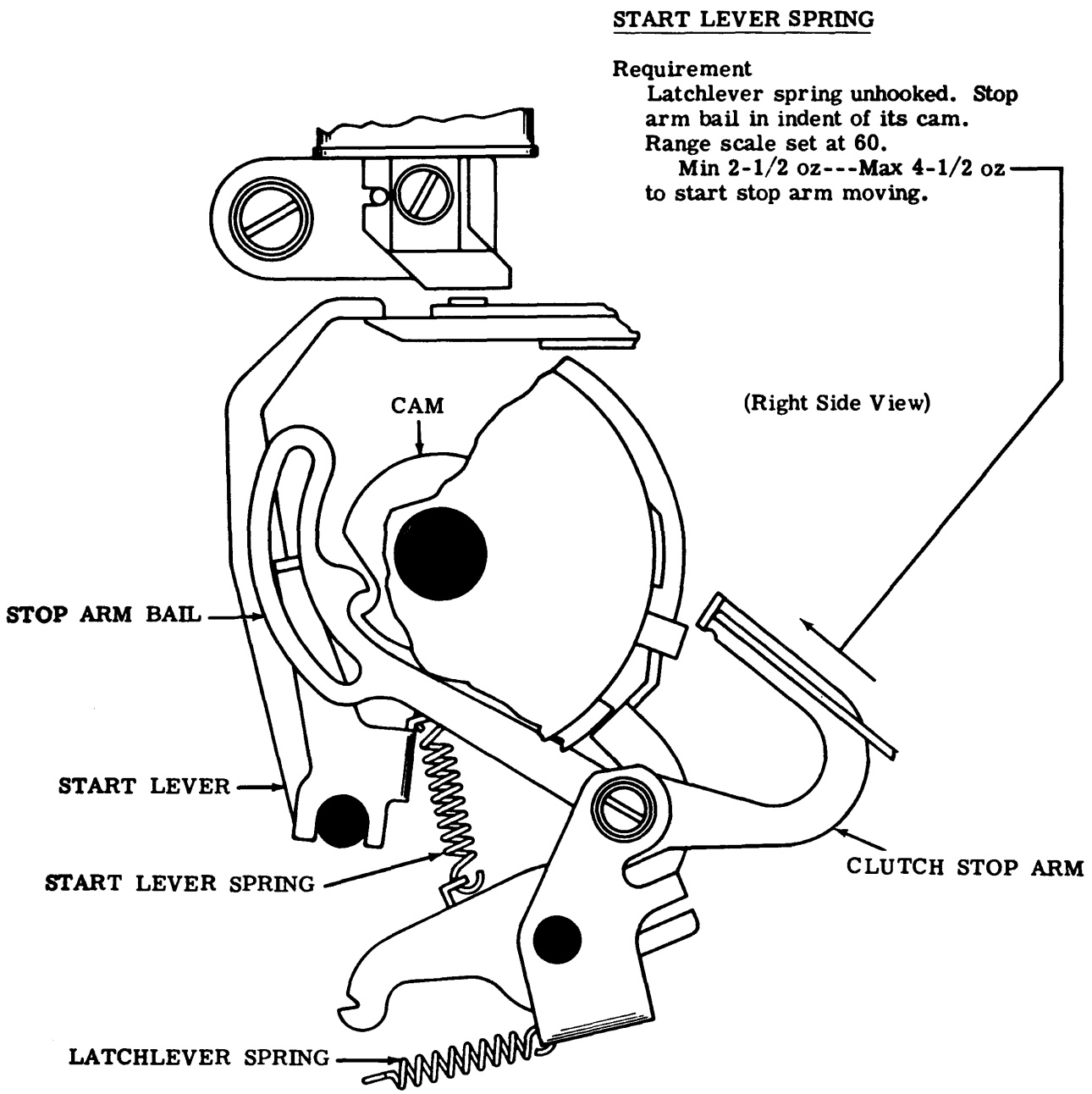

2.13 Codebar Mechanism

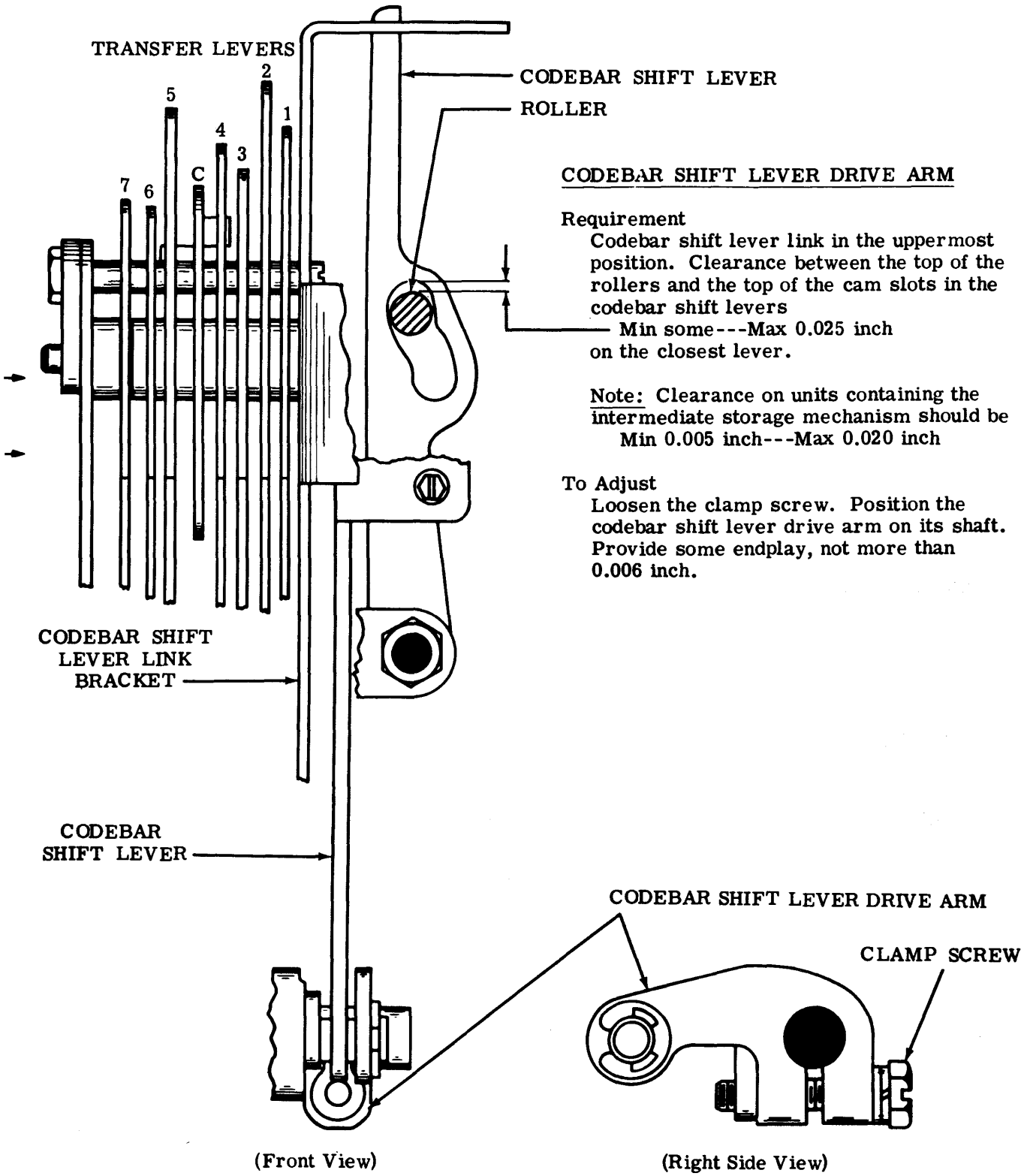

CODEBAR SHIFT LEVER DRIVE ARM

Requirement

Codebar shift lever link in the uppermost position. Clearance between the top of the rollers and the top of the cam slots in the codebar shift levers

Min some---Max 0.025 inch on the closest lever.

Note: Clearance on units containing the intermediate storage mechanism should be Min 0.005 inch---Max 0.020 inch

To Adjust

Loosen the clamp screw. Position the codebar shift lever drive arm on its shaft. Provide some endplay, not more than 0.006 inch.

2.14 Codebar Mechanism (continued)

COMMON TRANSFER LEVER SPRING

Requirement
Transfer lever in spacing position. Scale applied near upper end of common transfer lever.
Min 1/2 oz---Max 1-1/4 oz
to start lever moving.

TRANSFER LEVER ECCENTRIC

Requirement
Pushlevers positioned for rubout. Selector clutch disengaged. Codebar shift lever link in uppermost position, clearance between rear codebar shift lever and rear edge of shift bar farthest from rear codebar shift lever
Min 0.010 inch---Max 0.025 inch

Note 1: On units having the intermediate storage mechanism, the clearance between the rear shift lever and the rear edge of the shift bar should be
Min 0.010 inch---Max 0.025 inch
when play of shift bar is taken up for maximum clearance.

To Adjust
Rotate eccentric bushing with clamp screw loosened. High part of eccentric should be above horizontal center line.

Note 2: One or more codebar shift bars can touch codebar shift levers.

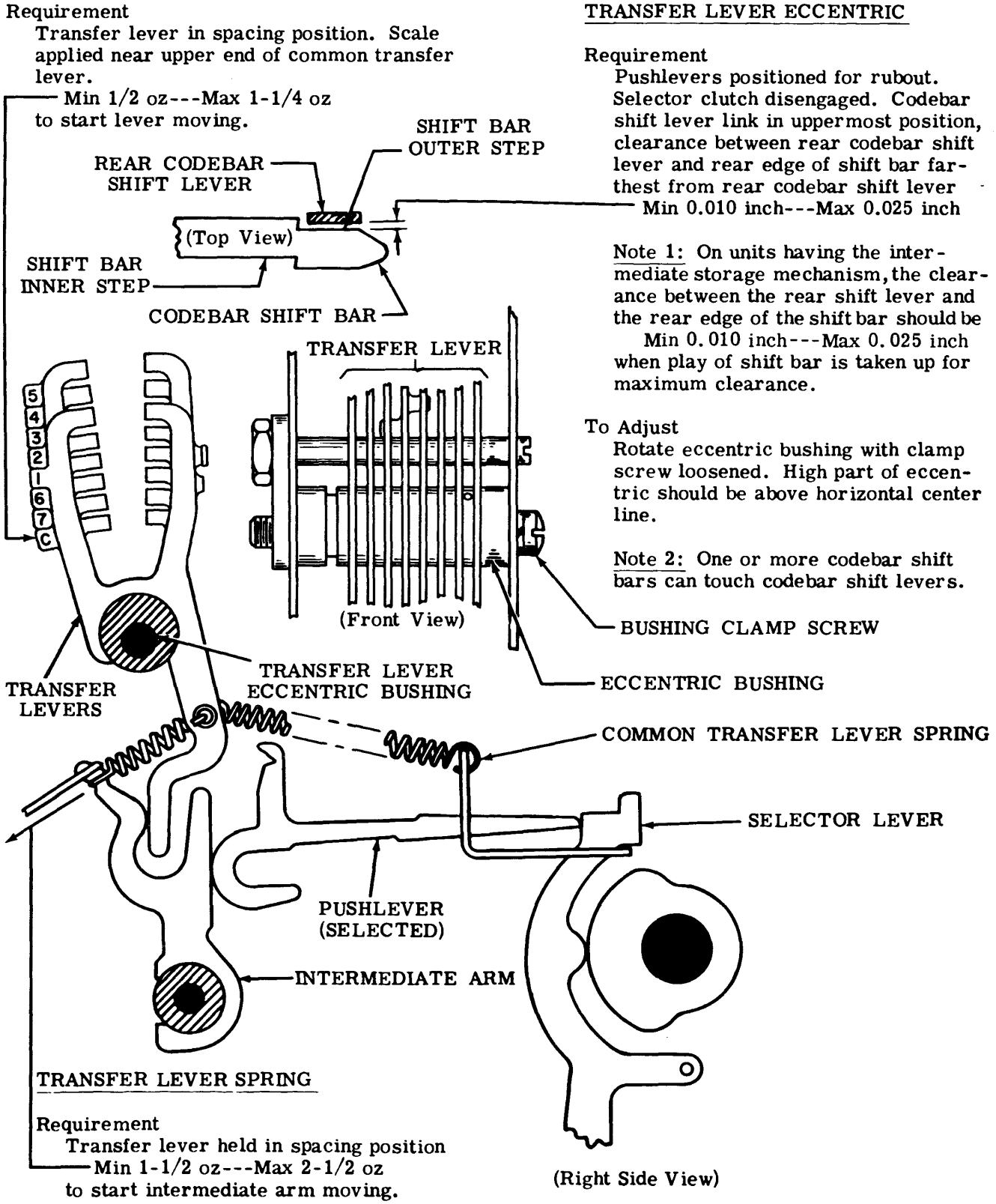

TRANSFER LEVER SPRING

Requirement
Transfer lever held in spacing position
Min 1-1/2 oz---Max 2-1/2 oz
to start intermediate arm moving.

2.15 Codebar and Selector Mechanisms (continued)

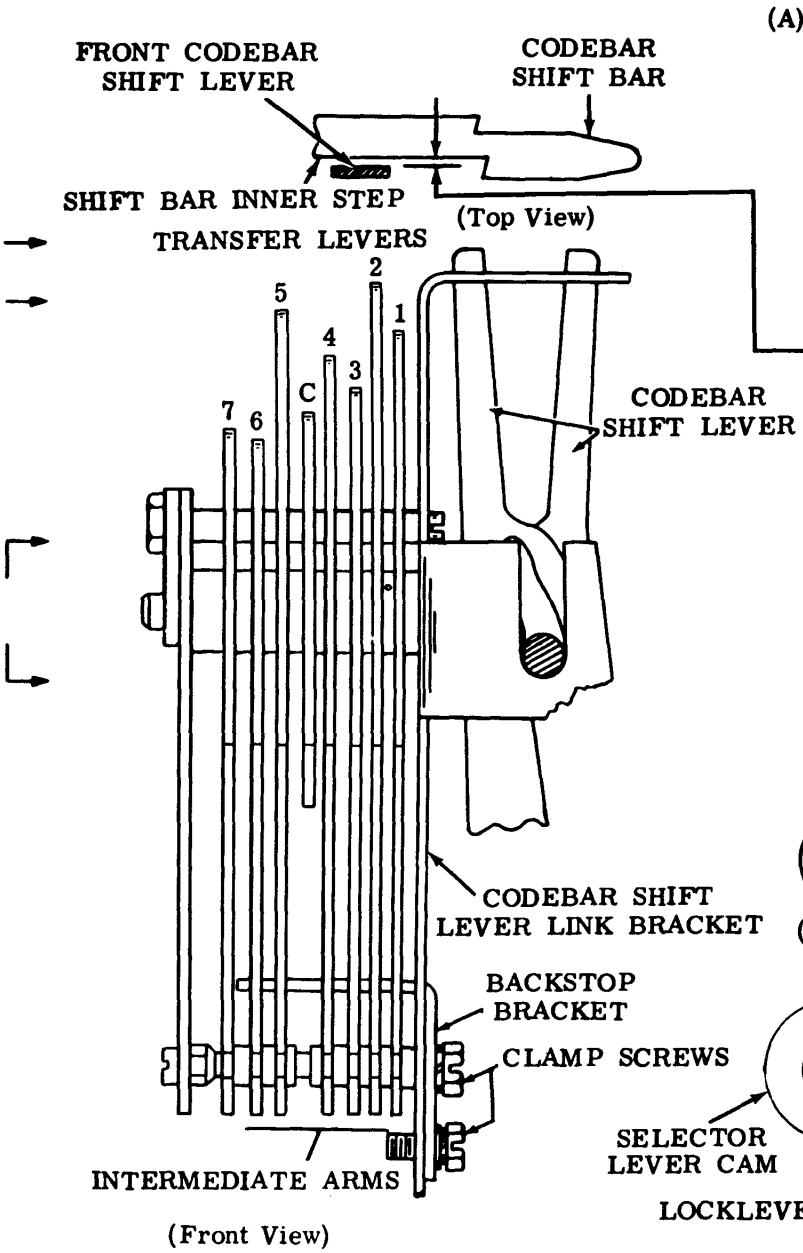

(A) INTERMEDIATE ARM BACKSTOP BRACKET

Requirement

Pushlevers not selected. All codebar shift bars to the right. Selector clutch disengaged. Codebar shift lever link in lowermost position. Clearance between front codebar shift lever and the front edge of the inner step of the codebar shift bar farthest from front codebar shift lever

Min 0.010 inch---Max 0.025 inch when play in parts is taken up for maximum clearance.

To Adjust

Position backstop bracket with its two clamp screws loosened.

Note: Number 7 codebar shift bar does not have to meet the maximum requirement until the SHIFT SELECTOR ARM BELLCRANK (2.43) adjustment has been made.

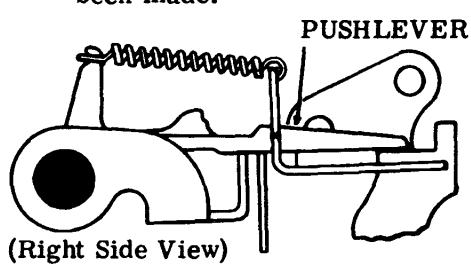

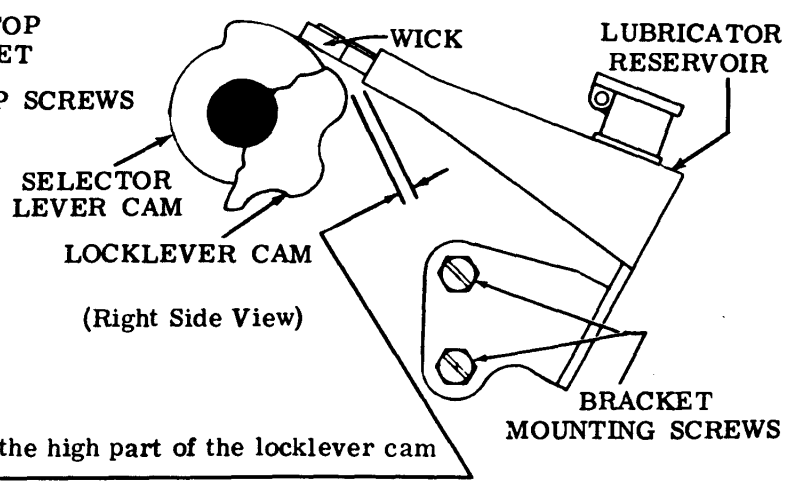

(B) SELECTOR CAM LUBRICATOR

Requirement

The lubricator tube should clear the high part of the locklever cam

Min 0.020 inch

The high part of the selector lever cams should touch the lubricator wick, but should not raise it more than 1/32 inch.

Note: There should be some clearance between the marking locklever spring and the reservoir.

To Adjust

Position the lubricator bracket with its mounting screws loosened.

2.16 Codebar Mechanism (continued)

CODEBAR SHIFT LEVER

Requirement

Motion of front and rear codebar shift levers should be equalized with respect to codebar travel.

(1) To Check (Front)

Select blank combination and rotate main shaft until codebar shift lever link reaches highest travel. Take up play for maximum clearance. Clearance between front codebar shift lever and shoulder on nearest codebar shift bar

Min 0.002 inch---Max 0.025 inch

(2) To Check (Rear)

Select rubout combination. Check clearance between rear codebar shift lever and shoulder on nearest codebar shift bar in same way.

Min 0.002 inch---Max 0.025 inch

Note: The clearance on units containing the intermediate storage mechanism should be Min 0.002 inch---Max 0.012 inch

To Adjust

Position adjusting plates (front and rear) with clamp screws loosened.

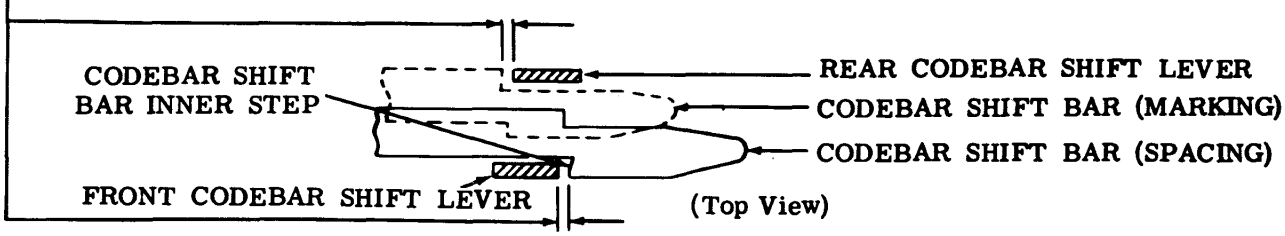

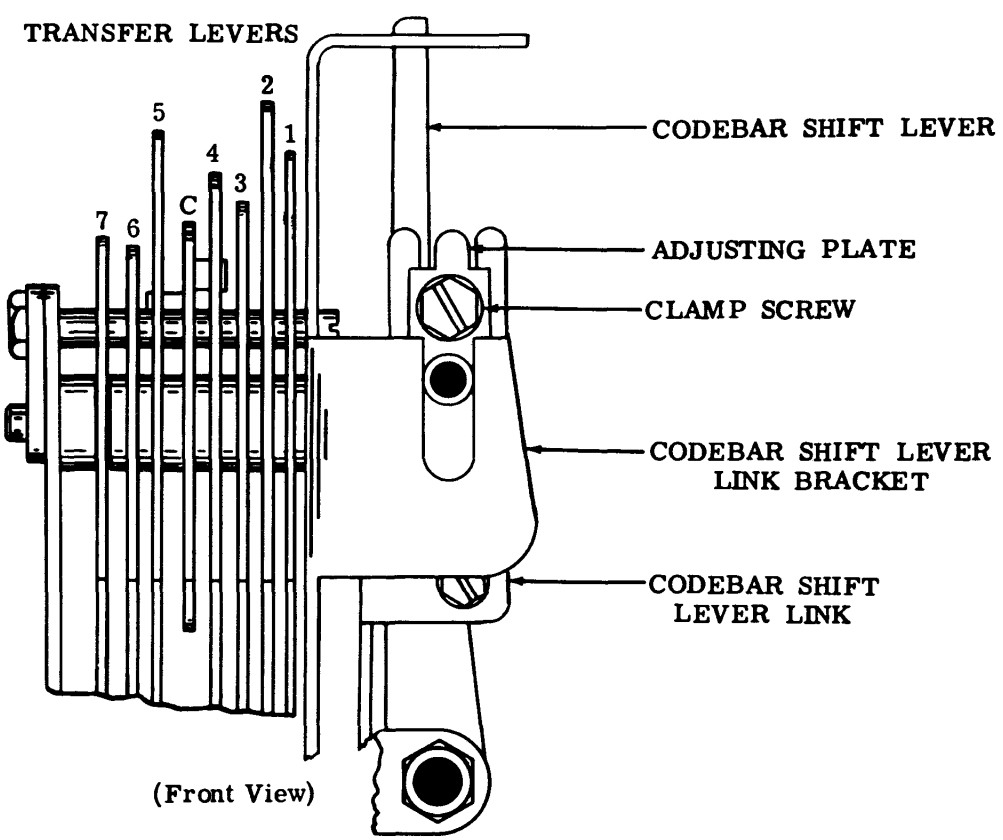

2.17 Codebar Mechanism (continued)

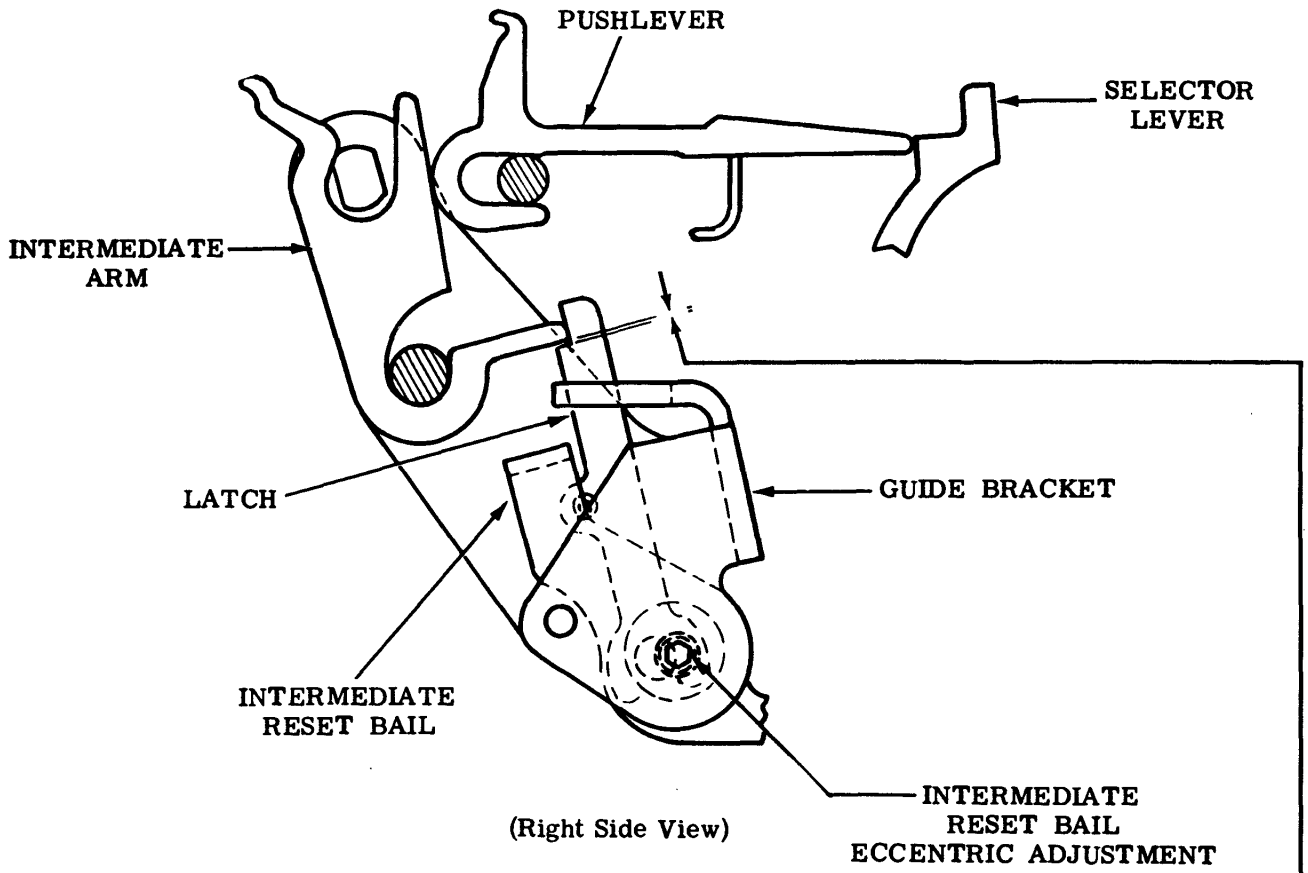

(Right Side View)

INTERMEDIATE LATCH ECCENTRIC

Note: This adjustment applies to units containing the intermediate storage mechanism.

Requirement

Pushlevers positioned for rubout. Selector clutch disengaged. Clearance between the top of latch surface on the latch and the bottom of the intermediate arm having the least clearance.

Min 0.002 inch---Max 0.006 inch

Check all latches.

To Adjust

Rotate the latch eccentric post to meet the requirement keeping the high part of the eccentric to the front.

2.18 Codebar Mechanism (continued)

(A) INTERMEDIATE RESET LEVER SPRING

Note: This adjustment applies to units containing the intermediate storage mechanism.

Requirement
With the intermediate reset lever in its unoperated position and the spring removed from the lever
Min 1 oz---Max 2 oz
to stretch the spring to its installed length. Replace the spring.

(B) INTERMEDIATE RESET BAIL SPRING

Note: This adjustment applies to units containing the intermediate storage mechanism.

Requirement
With all pushlevers in the marking condition and the latches in a latched position, push against the reset bail at the spring hole
Min 5 oz---Max 7 oz
to move the latches out of engagement of the intermediate arms.

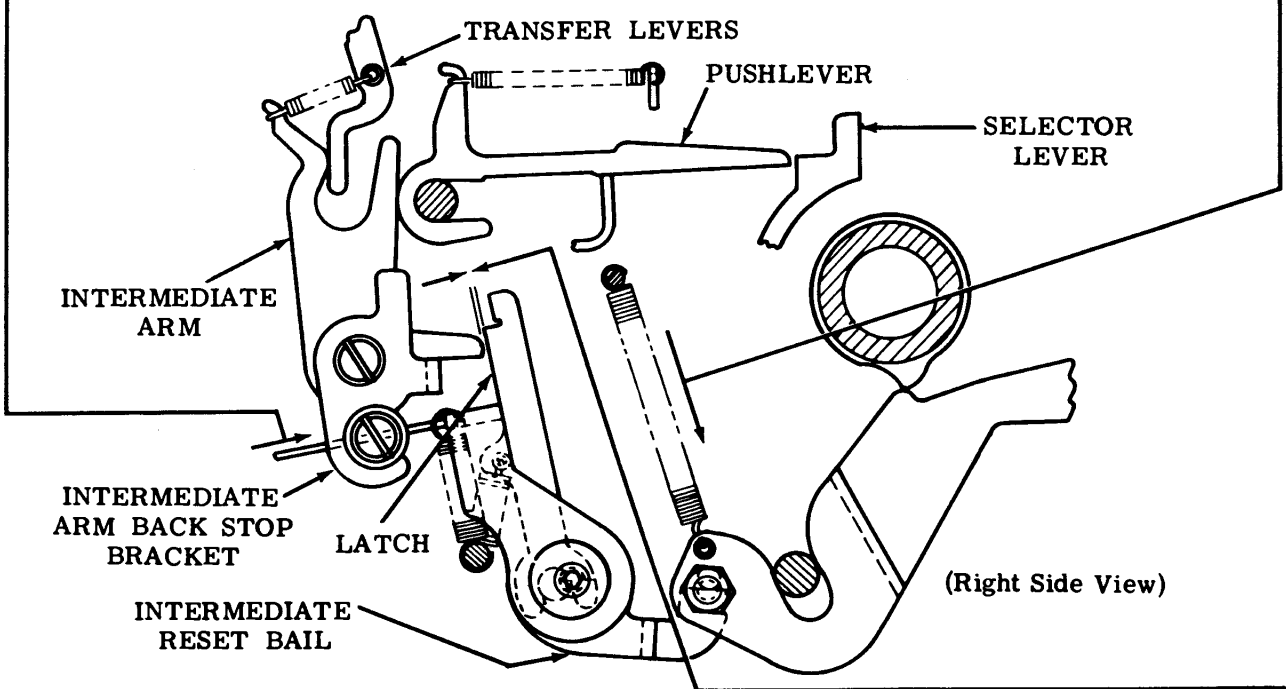

(C) INTERMEDIATE RESET BAIL ECCENTRIC

Note 1: This adjustment applies to units containing the intermediate storage mechanism (for applicable unit).

Requirement
With the intermediate reset lever on the high part of its cam. Clearance between the latch and the intermediate arm should be
Min 0.010 inch
with the high part of the eccentric to the rear.

To Adjust
Rotate eccentric to meet requirement.

Note 2: The codebar positioning mechanism is assembled at the factory and at this time the guide bracket is biased to the rear by means of the play in the body holes. If this assembly is removed from the printer, it will be necessary to bias the guide bracket to the rear during reassembly.

2.19 Main Shaft and Trip Shaft Mechanisms

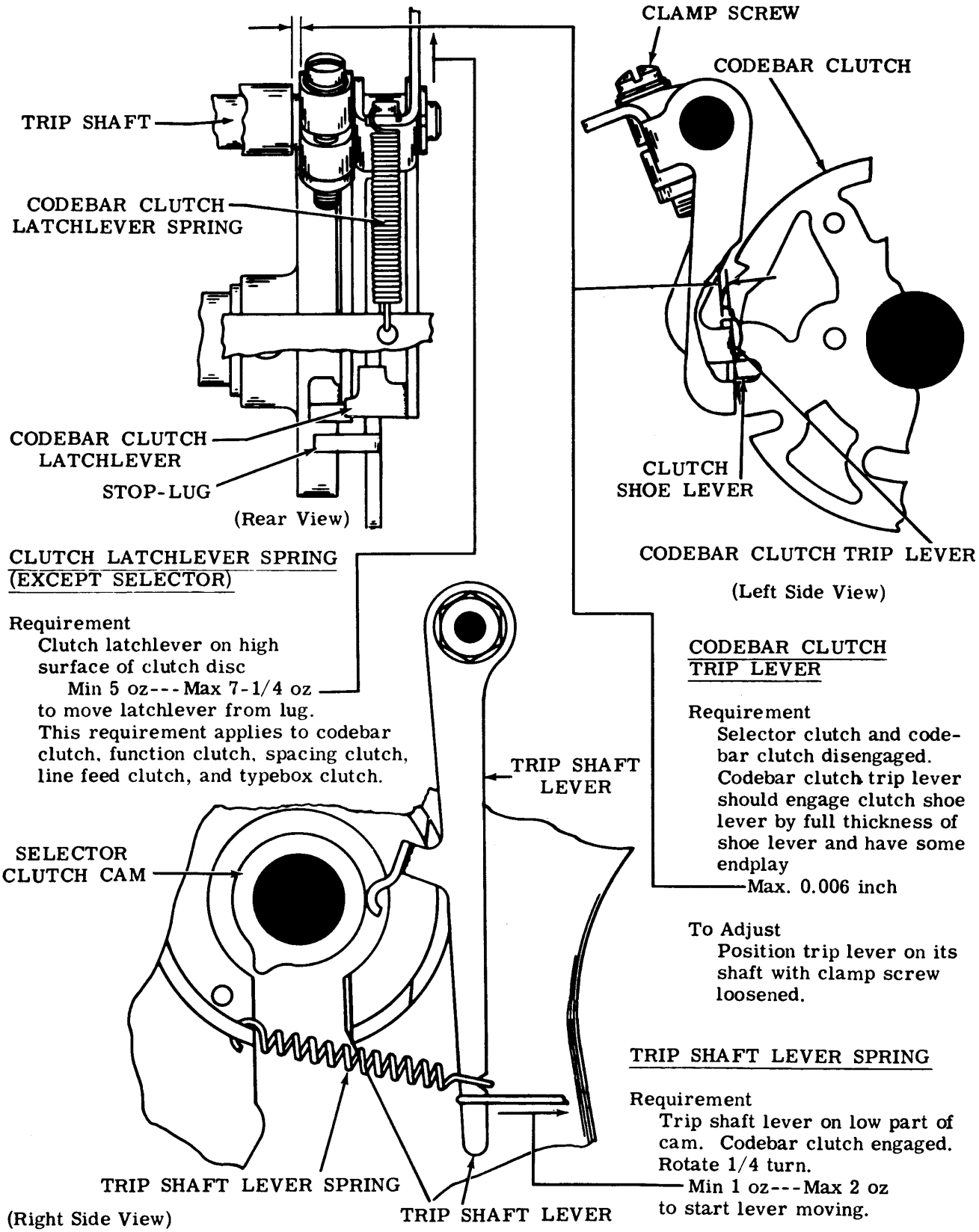

2.20 Main Shaft and Trip Shaft Mechanisms (continued)

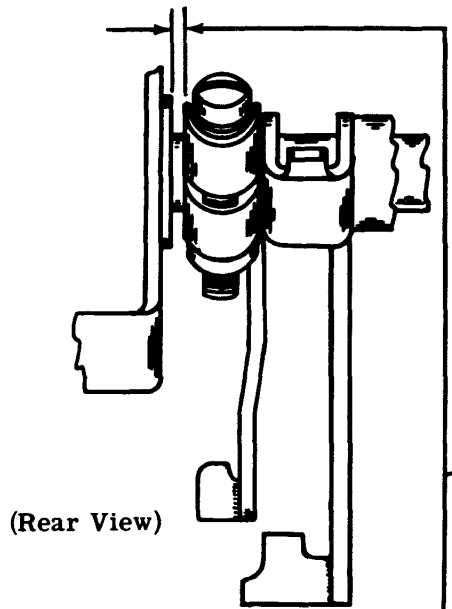

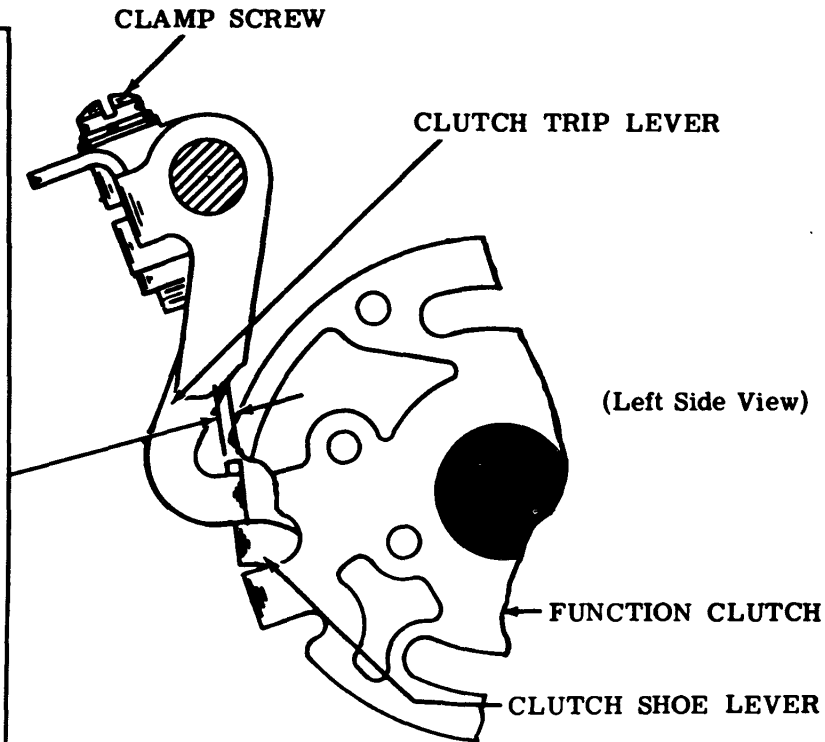

FUNCTION CLUTCH TRIP LEVER
(On Units Equipped With One Piece Trip Lever)

Requirement
Codebar clutch and function clutch disengaged. Function clutch trip lever should engage clutch shoe lever by full thickness of shoe lever. (Check at lug with least bite on two stop clutches.)

To Adjust
Position trip lever on its shaft with clamp screw loosened, letting shaft have endplay
Min some---Max 0.006 inch

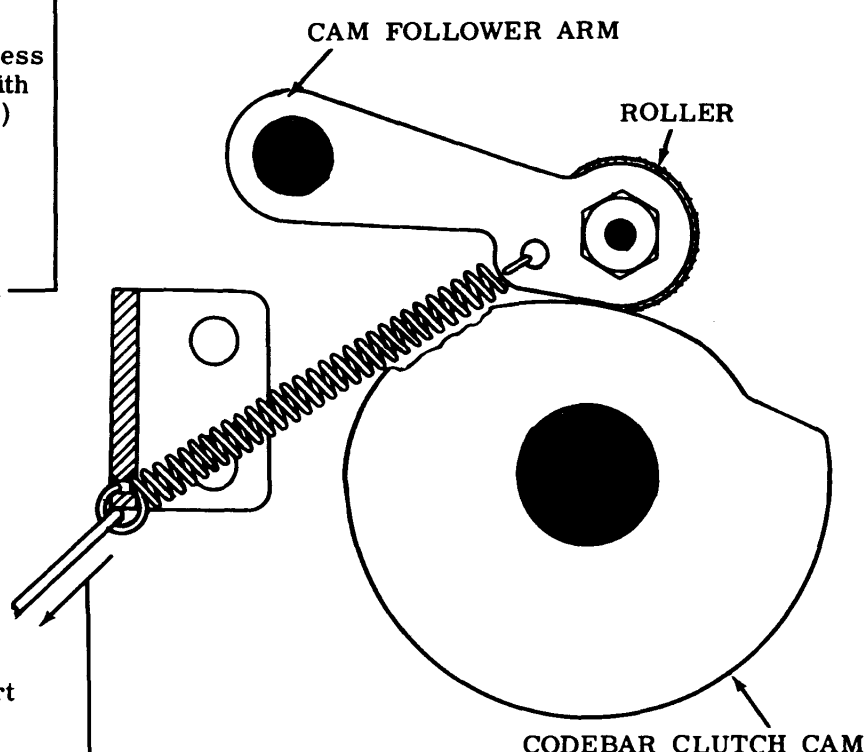

CODEBAR CLUTCH CAM FOLLOWER SPRING

Requirement
Cam follower roller on low part of cam. The spring unhooked from spring bracket.
Min 20 oz---Max 24 oz
to pull spring to installed length.

(Left Side View)

2.21 Main Shaft and Trip Shaft Mechanisms (continued)

(A) FUNCTION CLUTCH TRIP LEVER TRIP ARM
(On Units Equipped With Adjustable Backstop)

Requirement
Codebar clutch and function clutch disengaged. Clearance between edge of bail of function clutch trip lever and projection on trip lever trip arm.
Min 0.040 inch---Max 0.050 inch
When making this adjustment, position the trip lever trip arm so that the trip shaft has some endplay
Min some---Max 0.006 inch

To Adjust
Position trip arm on trip shaft with its clamp screw loosened.

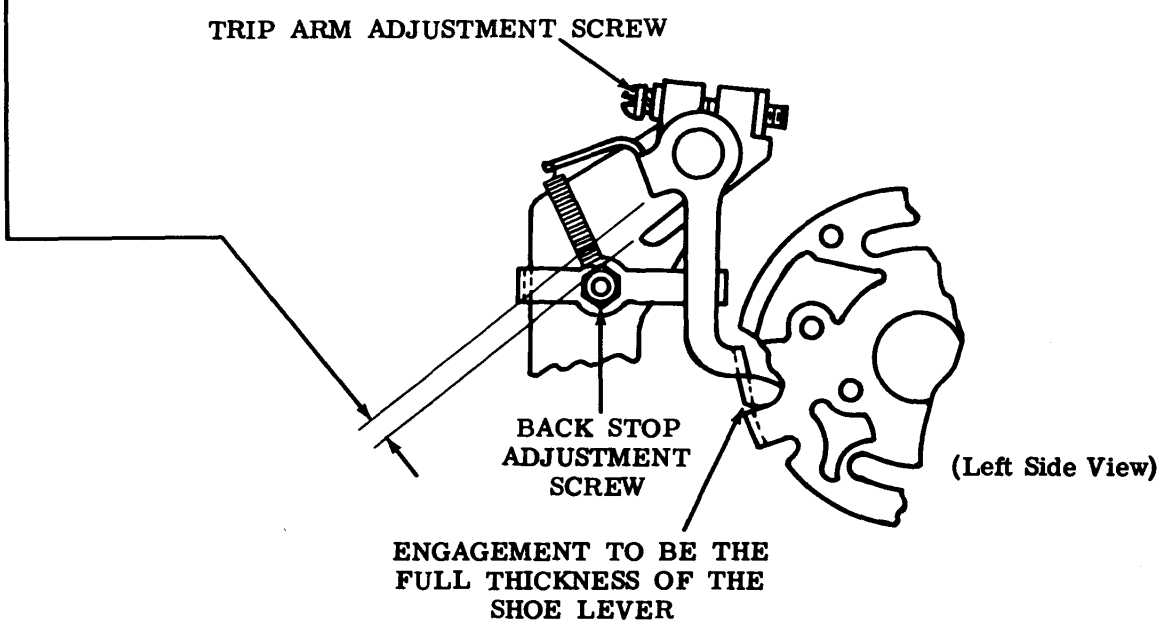

(Left Side View)

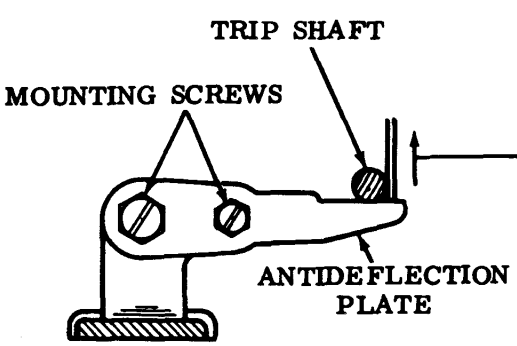

(Left Side View, Upside Down)

(B) ANTIDEFLECTION PLATE

Requirement
With typing unit upside down and function, spacing, line feed, and type-box clutches disengaged and latched
Min 1 lb---Max 5 lb
to pull trip shaft away from anti-deflection plate.

To Adjust
Position plate with mounting screws loosened.

2.22 Main Shaft and Trip Shaft Mechanisms (continued)

(A) CLUTCH TRIP SHAFT SET COLLARS

(1) Requirement
Spacing cutout lever should have side play
Min some---Max 0.008 inch

To Adjust
Position spacing cutout lever set collar.

(2) Requirement
Approximate alignment of right end of stop extensions on trip lever and shoe lever.

To Adjust
Position line feed clutch trip lever set collar.

(3) Requirement
Line feed clutch latchlever should have side play
Min some---Max 0.008 inch

To Adjust
Position line feed clutch latchlever set collar.

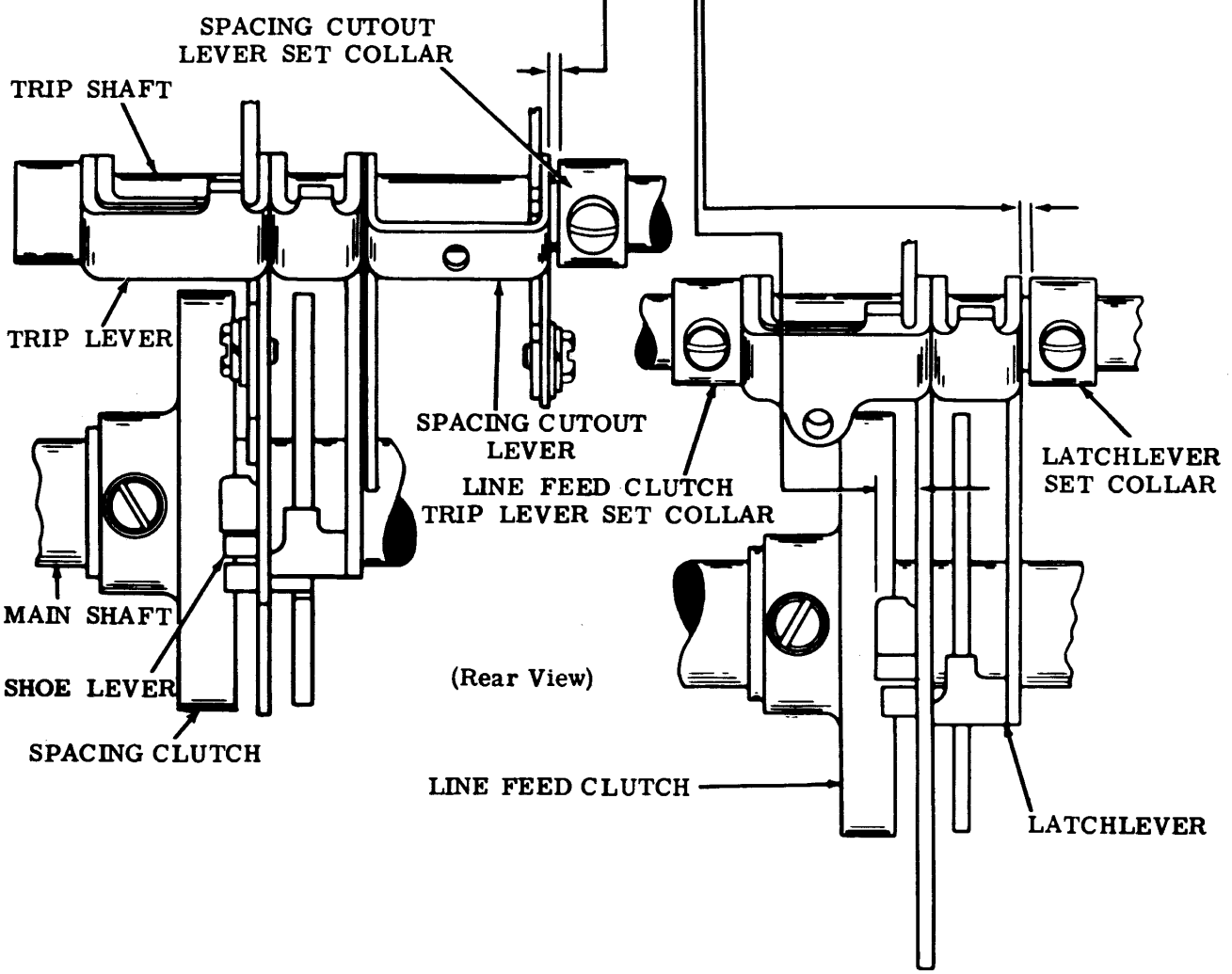

2.23 Main Shaft and Trip Shaft Mechanisms (continued)

SPACING CLUTCH TRIP LEVER

Requirement

Clearance between trip lever and clutch drum should be 0.018 to 0.035 inch less than clearance between shoe lever and drum at stop showing greatest clearance. There should be some overbite on all stop-lugs. Gauge by eye.

To Check

Disengage the clutch. Trip clutch trip lever and slowly rotate main shaft until trip lever is over the shoe lever. Take up play of shoe lever inward by snapping the trip lever over the shoe lever. Check clearance between shoe lever and drum at each stop position. With the trip lever at the stop position which yields greatest clearance, rotate main shaft slowly until the trip lever just falls off the stop-lug. Check clearance between trip lever and drum.

To Adjust

Position the trip lever by means of its clamp screw.

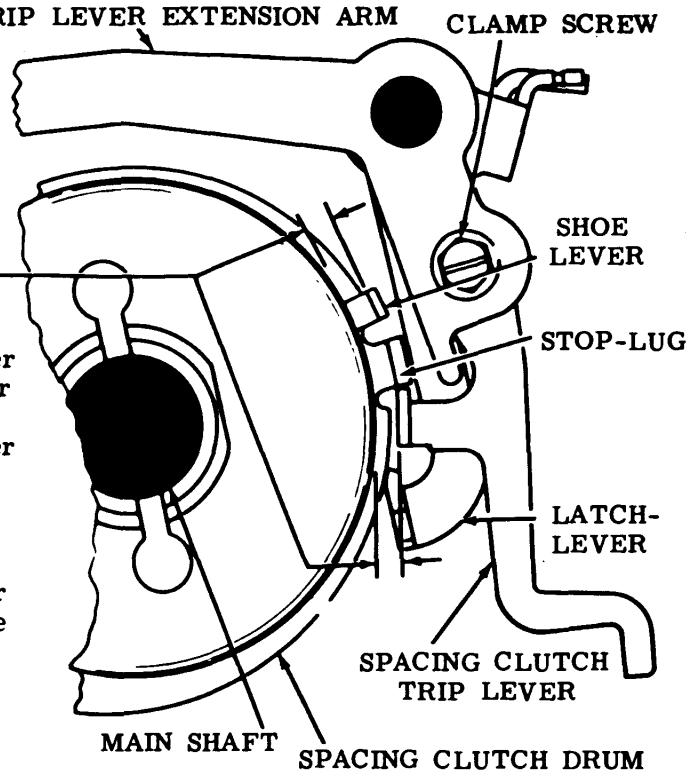

(Right Side View)

CLUTCH TRIP LEVER SPRING

Requirement

Clutch engaged and rotated until trip lever rests on stop-lug

Clutch	Min	Max
Function	1-1/2 oz	4 oz
Spacing	11 oz	16 oz
Line Feed	10 oz	13 oz
Typebox	5 oz	7-1/4 oz

to move lever away from stop-lug.

INTERMEDIATE LEVER SPRING (On Units Equipped With Three Piece Spacing Clutch Trip Lever Bail)

Requirement

Trip spacing clutch and turn the main shaft so that the spacing clutch stop lever arm is in its unoperated position. Unhook the spring from the intermediate lever bail and pull spring to installed length.

Min 1-1/2 oz---Max 3-1/2 oz

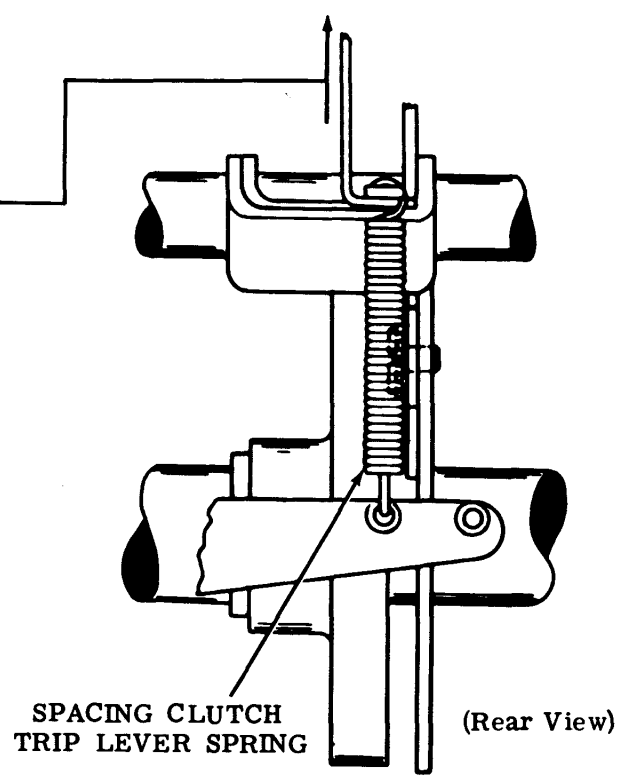

(Rear View)

2.24 Main Shaft and Trip Shaft Mechanisms (continued)

SPACING CLUTCH TRIP CAM FOLLOWER SPRING (If Used)

Requirement

With the function clutch in the stop position, unhook the spring from the spring ear. Hook a scale to the spring loop.

Min 2-1/2 oz---Max 3-1/2 oz

to pull the spring to its position length.

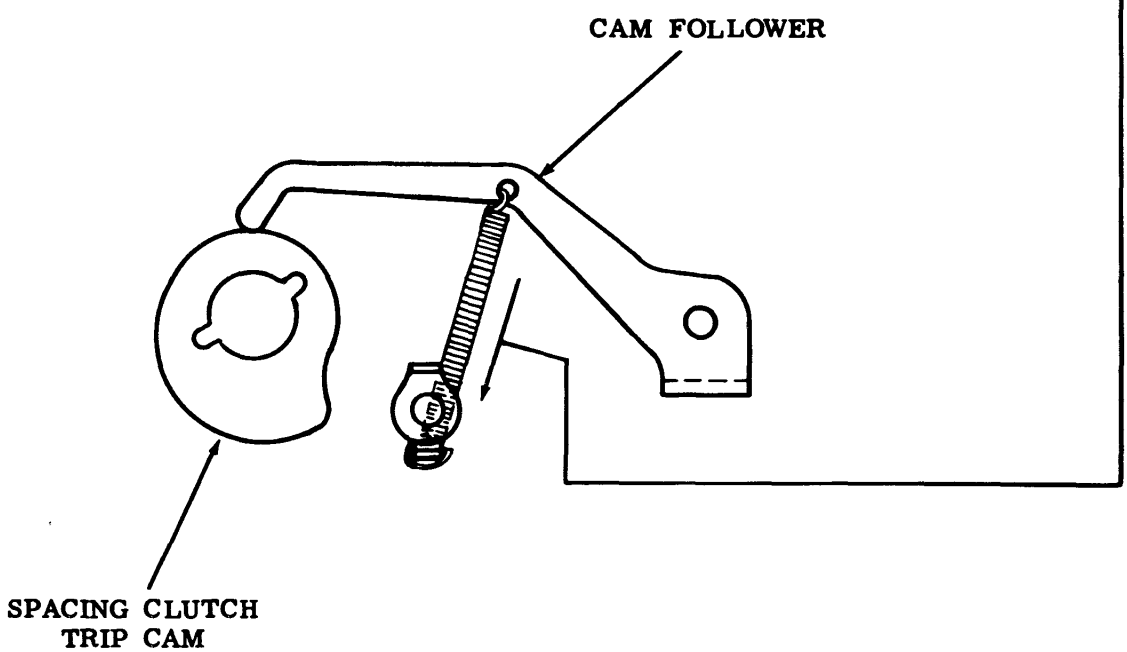

(Right Side View)

2.25 Main Shaft and Trip Shaft Mechanisms (continued)

LINE FEED CLUTCH TRIP LEVER ECCENTRIC POST

Requirement

Clearance between trip lever and clutch drum should be:

For 3-stop clutch — 0.018 inch to 0.035 inch

For 6-stop clutch — 0.012 inch to 0.025 inch

less than clearance between shoe lever and drum at stop which shows least clearance.

To Check

Disengage clutch. Trip clutch trip lever and slowly rotate main shaft until trip lever is over shoe lever. Take up play of shoe lever inward by snapping trip lever over shoe lever. Check clearance between shoe lever and drum at each stop position. With trip lever at stop position which yields least clearance, rotate main shaft slowly until trip lever just falls off stop-lug. Check clearance between trip lever and drum.

To Adjust

Back off trip lever adjusting screw and position trip lever eccentric stop post.

LINE FEED CLUTCH TRIP LEVER ADJUSTING SCREW

(1) Requirement

Clearance between end of trip lever adjusting screw and trip arm

Min some---Max 0.006 inch

To Check

Line feed function slide arm in rear position. Clutch trip lever against its eccentric post. Trip arm held against its function slide arm.

To Adjust

Position adjusting screw.

(2) Requirement

Clearance between line feed trip lever and all line feed clutch shoe levers should be Min 0.004 inch when form-out and vertical tab is selected.

To Adjust

Check and refine if necessary: Requirement (1), FUNCTION RESET BAIL BLADE (2.36), LINE FEED CLUTCH TRIP LEVER ECCENTRIC POST (2.25), MOUNTING BRACKET (3.01).

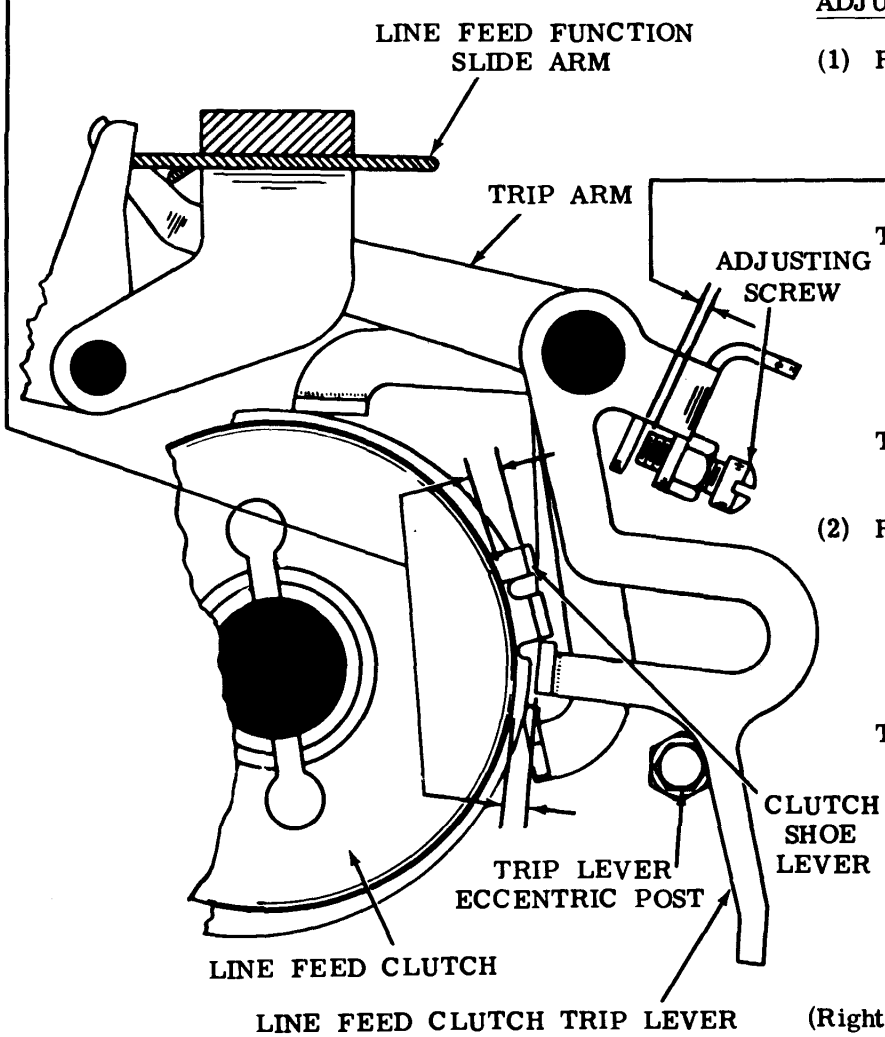

(Right Side View)

2.26 Main Shaft and Trip Shaft Mechanisms (continued)

TYPEBOX CLUTCH TRIP LEVER ECCENTRIC POST

Requirement
Typebox clutch disengaged. Trip lever should engage the clutch shoe lever by the full thickness of the shoe lever.

To Adjust
Position the trip lever eccentric post.

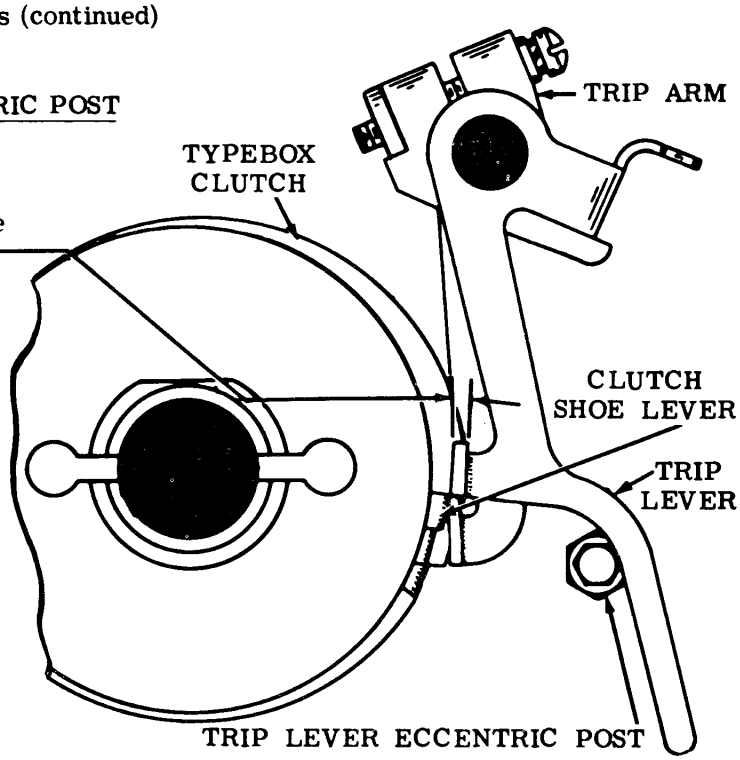

(Right Side View)

TYPEBOX CLUTCH TRIP LEVER TRIP ARM

(1) Requirement
Clutch trip shaft cam follower roller (see 2.20) on lowest surface of cam (located on codebar clutch). Clearance between inner face of typebox clutch trip lever and the clutch disc stop-lug.
Min 0.025 inch---Max 0.045 inch

To Adjust
Loosen clamp screw and position stop.

(2) Requirement
When positioning the trip arm determine that the latchlever has some side play
Max 0.008 inch

To Adjust
Position the clutch trip arm on its shaft with the clamp screw loosened.

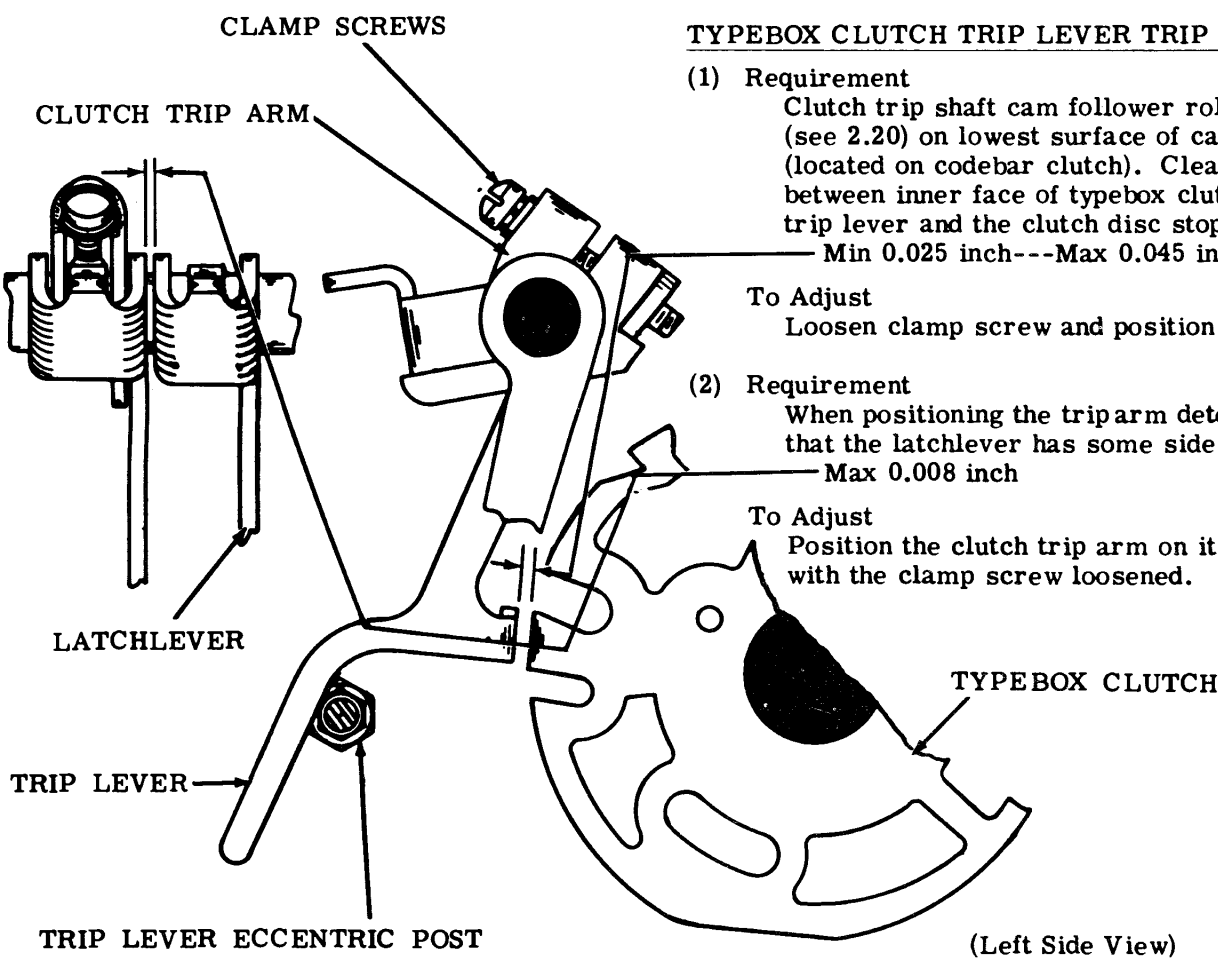

(Left Side View)

2.27 Main Shaft and Trip Shaft Mechanisms (continued)

CLUTCH SHOE LEVER

Requirement

Gap between clutch shoe lever and its stop-lug should be 0.055 inch to 0.085 inch greater when clutch is engaged than when the clutch is disengaged.

To Check

Disengage the clutch and measure the gap. Trip the clutch and rotate it until the clutch shoe lever is toward the bottom of the unit. Again measure the gap with the clutch thus engaged.

Note 1: On multiple stop clutches check the clearance at the stop-lug that is adjacent to the form in the clutch adjusting disc.

To Adjust

Loosen the two clamp screws on the clutch disc. Engage a wrench or screwdriver on the lug of the adjusting disc and rotate the disc.

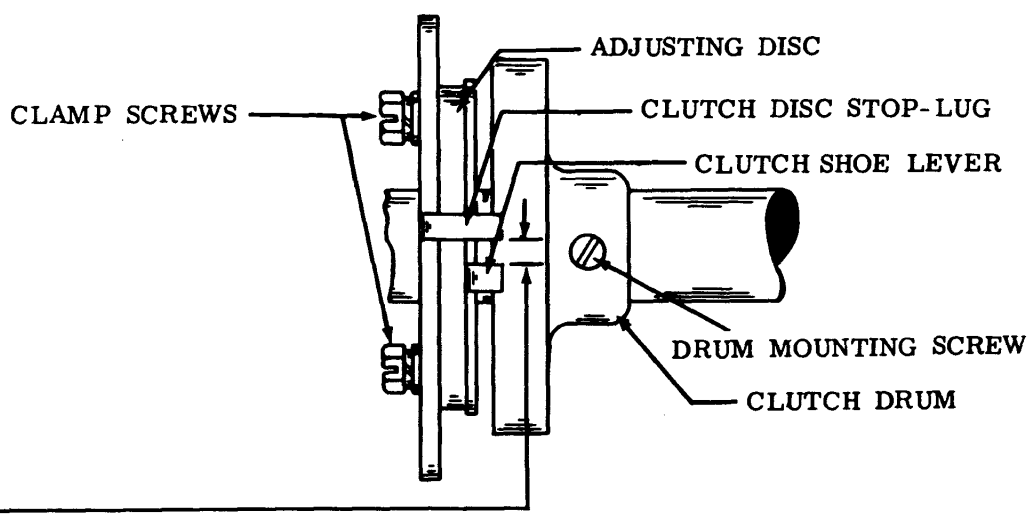

(Bottom View)

Note 2: After above adjustment is made, disengage clutch, remove drum mounting screw, and rotate drum in its normal direction of rotation to make certain that it does not drag on shoe. If drum drags, refine above adjustment towards maximum.

2.28 Main Shaft and Trip Shaft Mechanisms (continued)

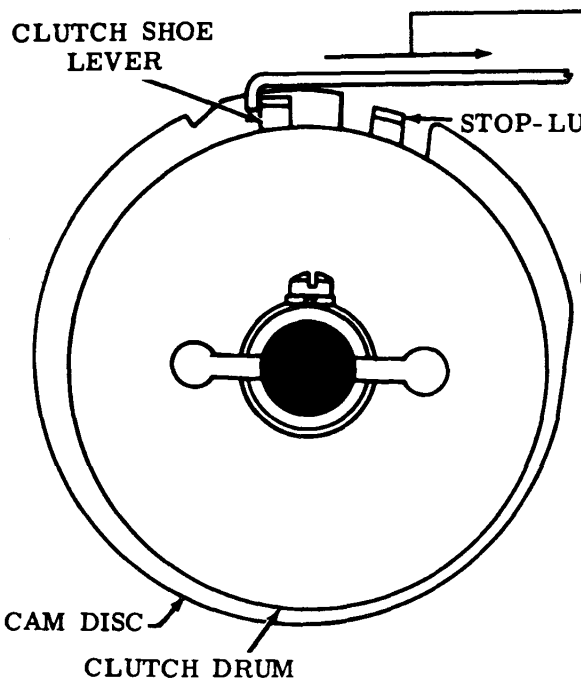

CLUTCH SHOE LEVER SPRING

Requirement
Clutch engaged. Hold cam disc to prevent turning. Spring scale pulled at tangent to clutch.
One-Stop Clutches:
Min 15 oz---Max 20 oz
Multiple-Stop Clutches:
Min 16 oz---Max 22 oz
to move the shoe lever in contact with the stop-lug.

CLUTCH DRUM POSITION (EXCEPT SELECTOR)

Requirement
Clutch shoe lever held disengaged. Clutch should have some endplay
Max 0.015 inch

To Adjust
Position each drum and spacing clutch set collar with mounting screws loosened.

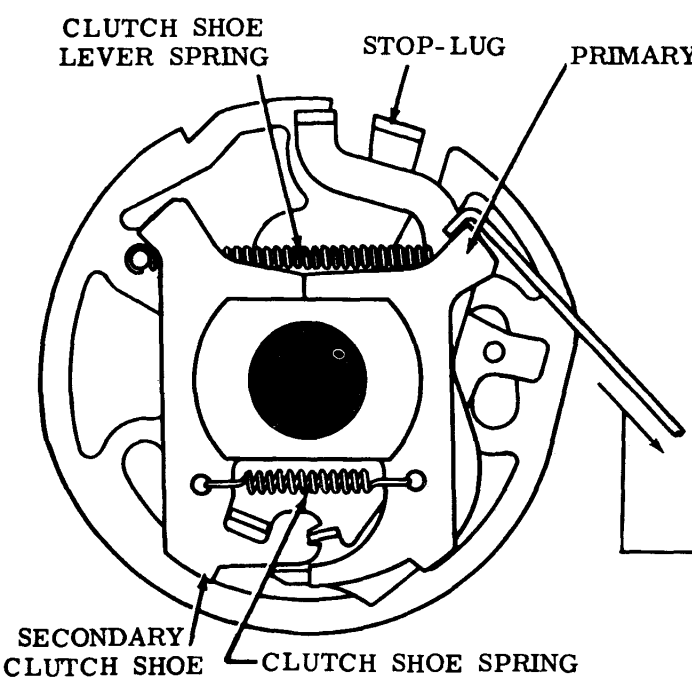

CLUTCH SHOE SPRING

Note: In order to check this spring, it is necessary to remove the clutch from the main shaft. Therefore, it should not be checked unless there is good reason to believe that it does not meet its requirement.

Requirement
Clutch drum removed. Spring scale applied to primary shoe at a tangent to the friction surface.
Min 3 oz---Max 5 oz
to start the primary shoe moving away from secondary shoe at point of contact.

2.29 Spacing Mechanism

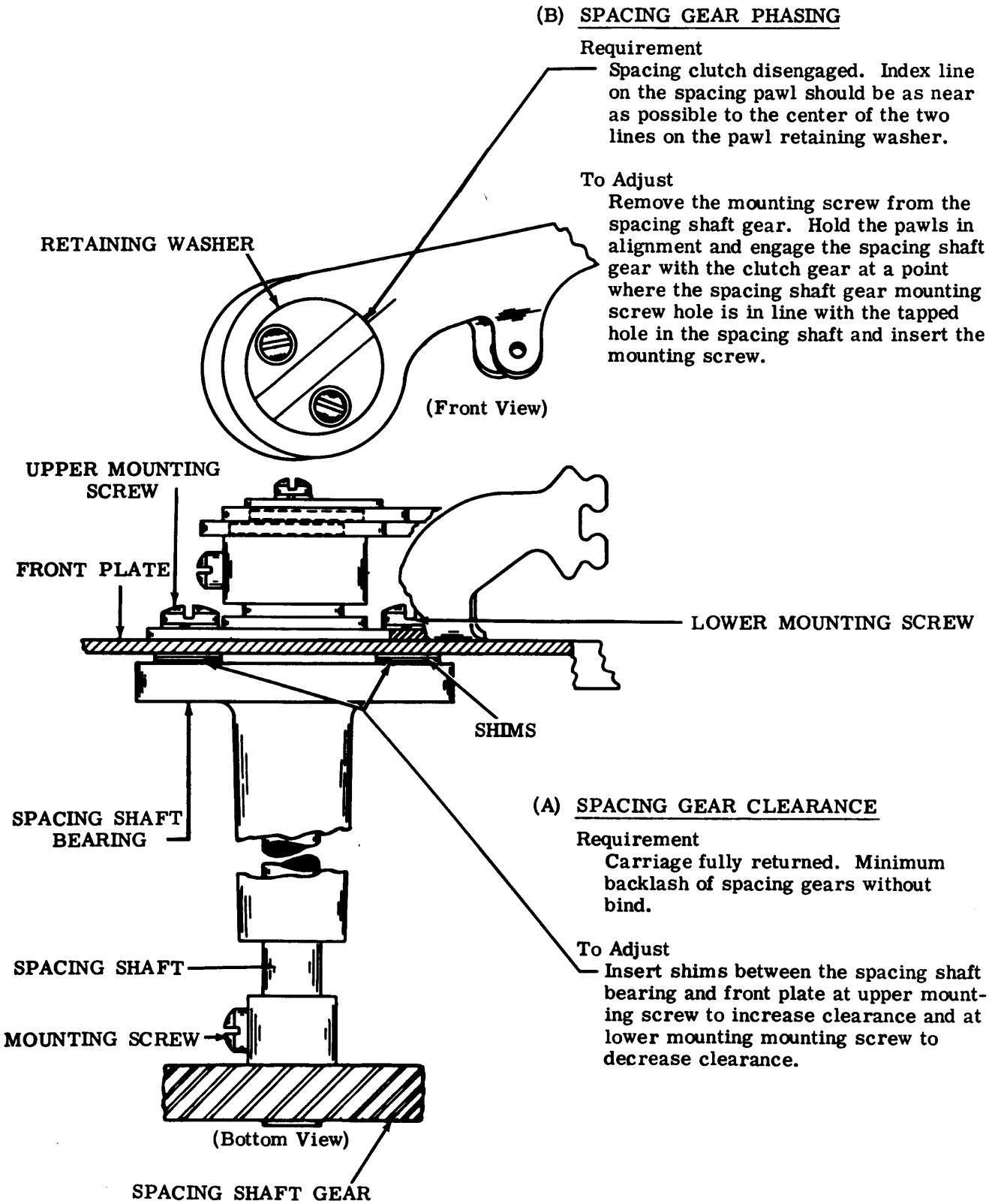

(B) SPACING GEAR PHASING

Requirement

Spacing clutch disengaged. Index line on the spacing pawl should be as near as possible to the center of the two lines on the pawl retaining washer.

To Adjust

Remove the mounting screw from the spacing shaft gear. Hold the pawls in alignment and engage the spacing shaft gear with the clutch gear at a point where the spacing shaft gear mounting screw hole is in line with the tapped hole in the spacing shaft and insert the mounting screw.

(A) SPACING GEAR CLEARANCE

Requirement

Carriage fully returned. Minimum backlash of spacing gears without bind.

To Adjust

Insert shims between the spacing shaft bearing and front plate at upper mounting screw to increase clearance and at lower mounting mounting screw to decrease clearance.

2.30 Line Feed, Platen Mechanism, and Positioning Mechanism

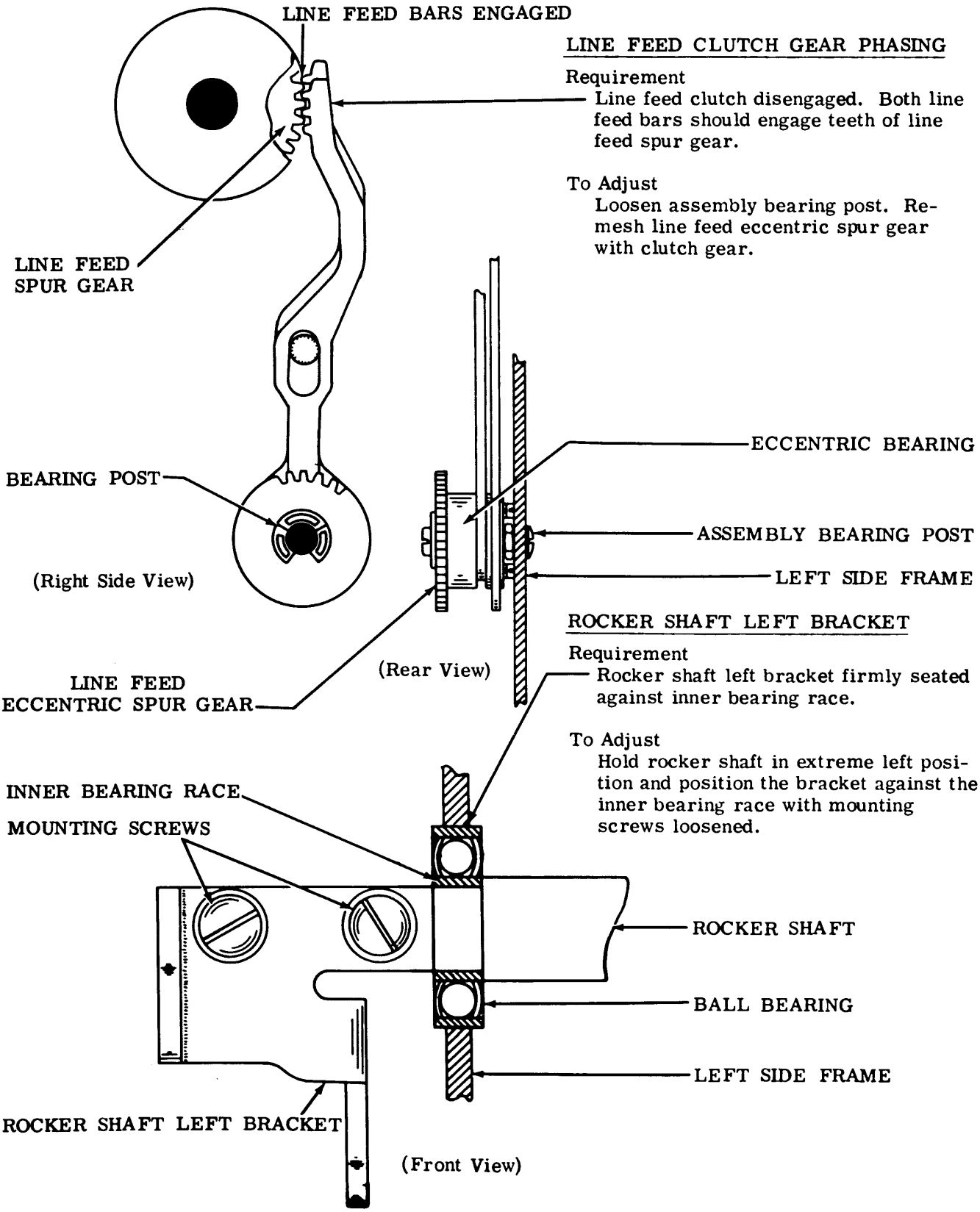

2.31 Positioning Mechanism

ROCKER SHAFT BRACKET ECCENTRIC STUD

(1) Requirement

Typebox clutch disengaged. Play in locking arm taken up towards front. Gap between lower side of locklever roller and top edge of shoulder on horizontal positioning locklever Min 0.055 inch---Max 0.090 inch

To Adjust

Position eccentric stud in lower end of rocker shaft left bracket. Keep high part of eccentric (marked with dot) below center line of drive link.

(2) Requirement

Rocker shaft drive link bearing stud should be free to move, parallel to the main shaft, in its typebox clutch bearing when the clutch is in stop position and 180 degree position.

To Adjust

Refine the above to adjust.

Note: Any change in this adjustment after making related adjustments will require a rechecking of the following adjustments: HORIZONTAL POSITIONING DRIVE LINKAGE (2.38), RIGHT VERTICAL POSITIONING LEVER ECCENTRIC STUD (2.32), LEFT VERTICAL POSITIONING LEVER ECCENTRIC STUD (2.33), VERTICAL POSITIONING LOCKLEVER (2.34), RIBBON FEED LEVER BRACKET (2.59), SPACING TRIP LEVER BAIL CAM PLATE (2.35), PRINTING TRACK (2.53), PRINTING ARM (2.54), REVERSING SLIDE BRACKETS (2.37), and RIBBON REVERSE SPUR GEAR (2.58).

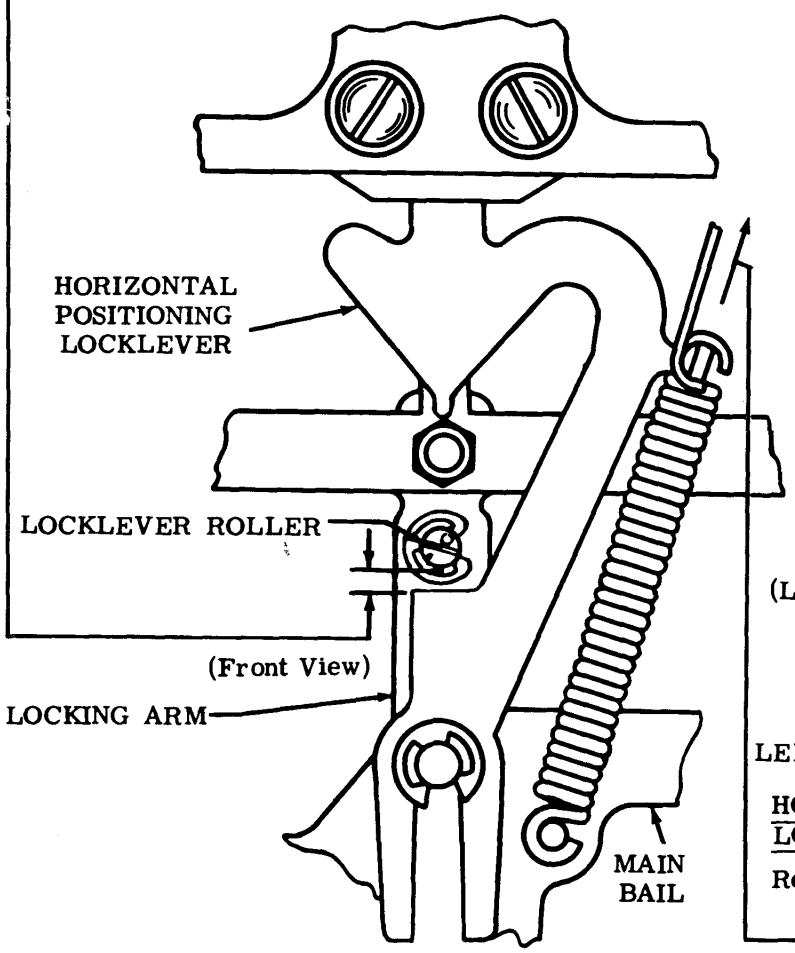

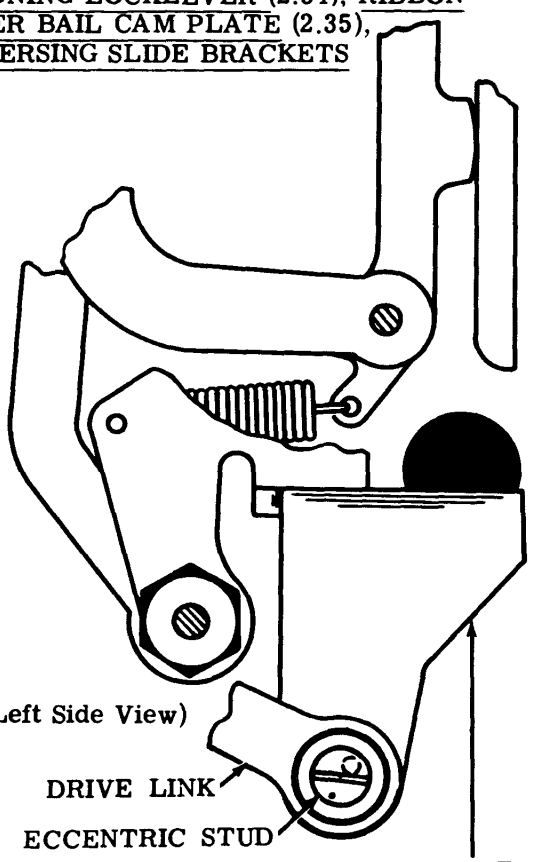

HORIZONTAL POSITIONING LOCKLEVER SPRING

Requirement

Locklever in upper position Min 28 oz---Max 43 oz to start lever moving upward.

2.32 Positioning Mechanism (continued)

RIGHT VERTICAL POSITIONING LEVER ECCENTRIC STUD

Requirement

Typebox clutch disengaged, common codebar in spacing position. Play taken up by pressing downward on common codebar at guide block.

Min 0.030 inch---Max 0.050 inch clearance between the toe of vertical positioning lever and the bottom of the common codebar when play is taken up to make clearance a minimum.

To Adjust

Position the eccentric stud in the right rocker shaft bracket. Position high part of eccentric (marked with dot) toward the rear. (The high part of the eccentric can also be identified by the exposed portion of the flat surface of the vertical positioning link.)

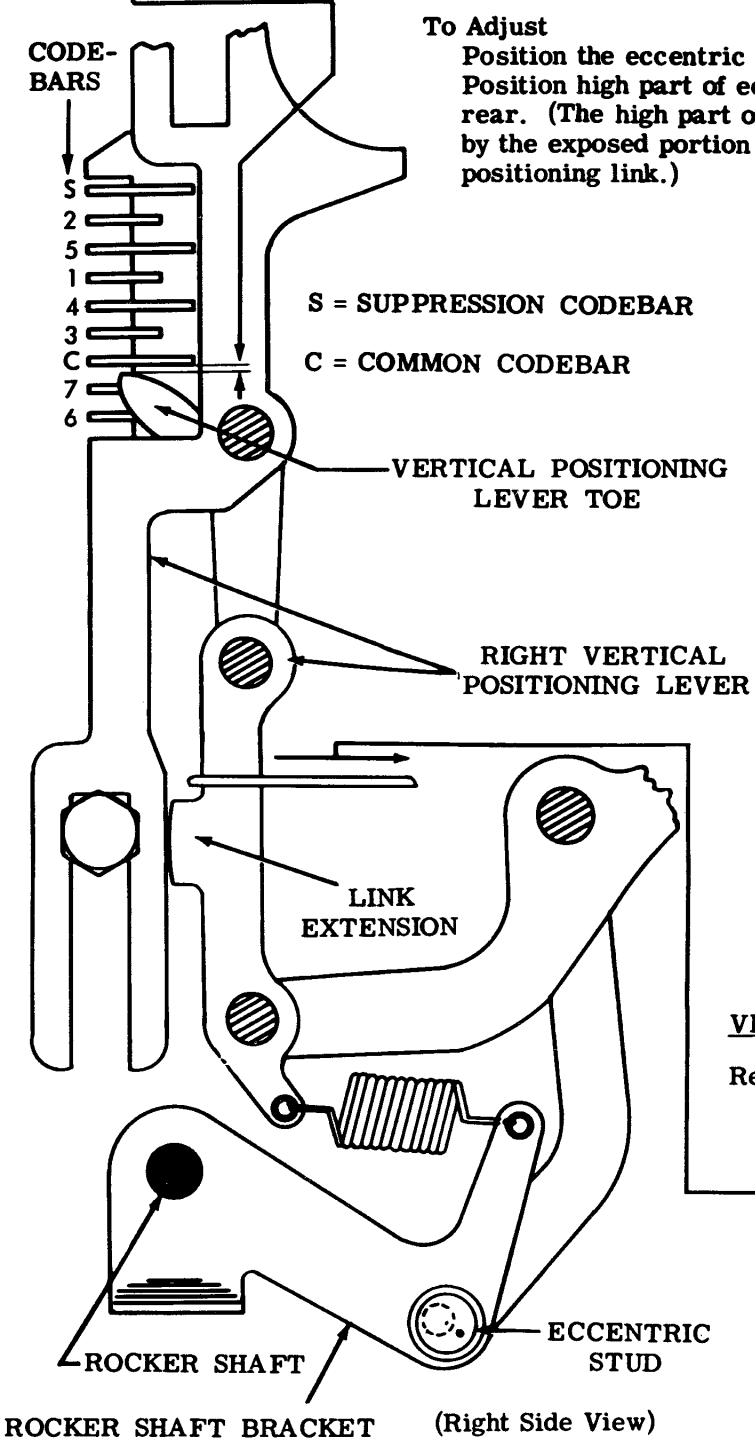

(Right Side View)

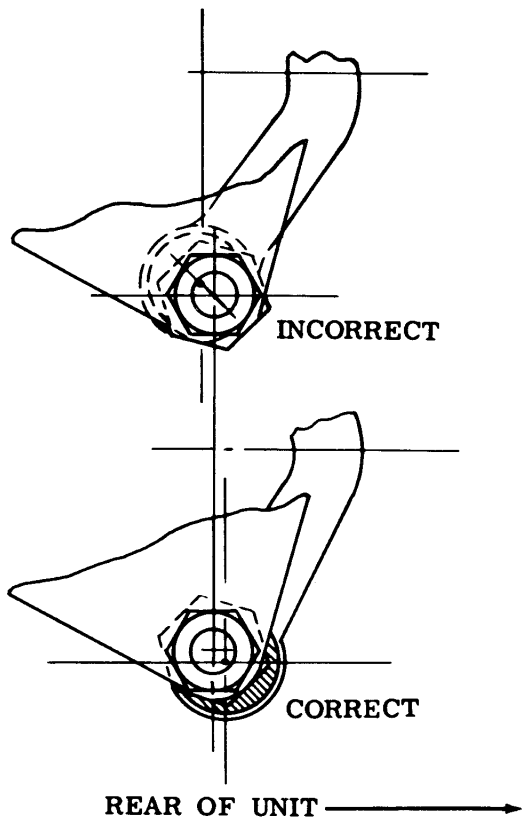

VERTICAL POSITIONING LEVER SPRING

Requirement

Vertical positioning lever toes (right and left) in contact with the suppression codebar, levers not buckled.

Min 4 oz---Max 12 oz to move the link extension away from the vertical positioning lever. Check both right and left springs.

2.33 Positioning Mechanism (continued)

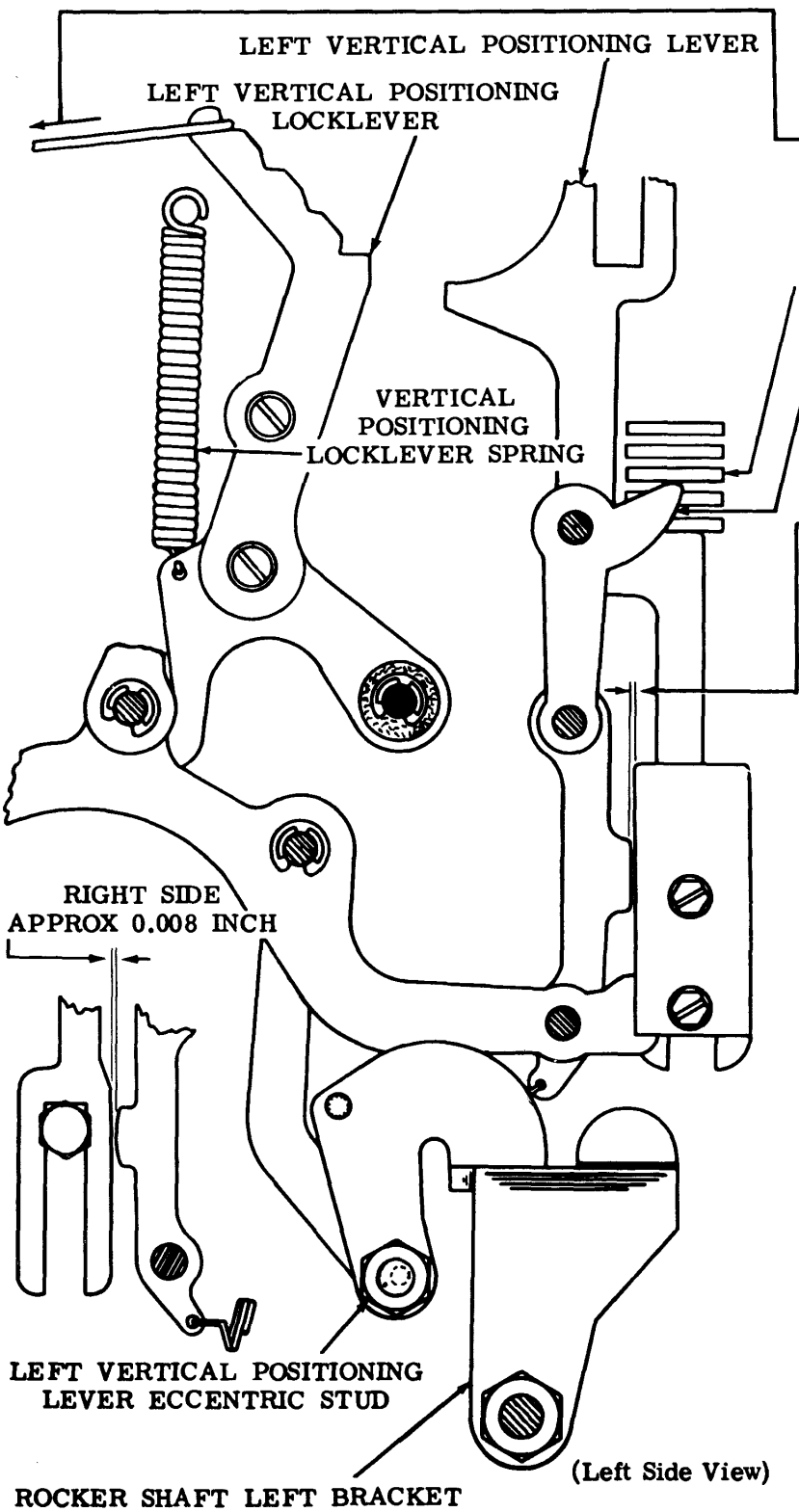

VERTICAL POSITIONING LOCK-LEVER SPRING

Requirement
Typebox clutch disengaged
Min 5 oz---Max 8 oz
to start locklever moving.
Check right and left springs.

COMMON CODEBAR

VERTICAL POSITIONING LEVER TOE

LEFT VERTICAL POSITIONING LEVER ECCENTRIC STUD

Requirement
Right and left vertical positioning levers should buckle equally within 0.006 inch.

To Check
Common codebar in spacing position. Trip typebox clutch. Rotate main shaft until right vertical positioning lever toe touches common codebar, buckling its lower link approximately 0.008 inch. Left vertical positioning lever toe should touch common codebar, buckling its lower link equally within 0.006 inch.

To Adjust
Position eccentric stud on rocker shaft left bracket inner arm. Position high part of cam (marked with dot) toward rear.

Note: On units containing intermediate storage mechanism, position the eccentric stud in the right rocker shaft bracket. (The high part of the eccentric can also be identified by the exposed portion of the flat surface of the vertical positioning link.)

2.34 Positioning Mechanism (continued)

VERTICAL POSITIONING LOCKLEVER

(1) Requirement
Rubout combination set up on codebars. Main side operating levers at upper end of travel. Upper notch of vertical positioning locklever fully engaged (manually if necessary) with vertical slide projection. Upper surface of follower arm rear extension should be Min in contact with---Max 0.004 inch away from inner extension of main side lever.

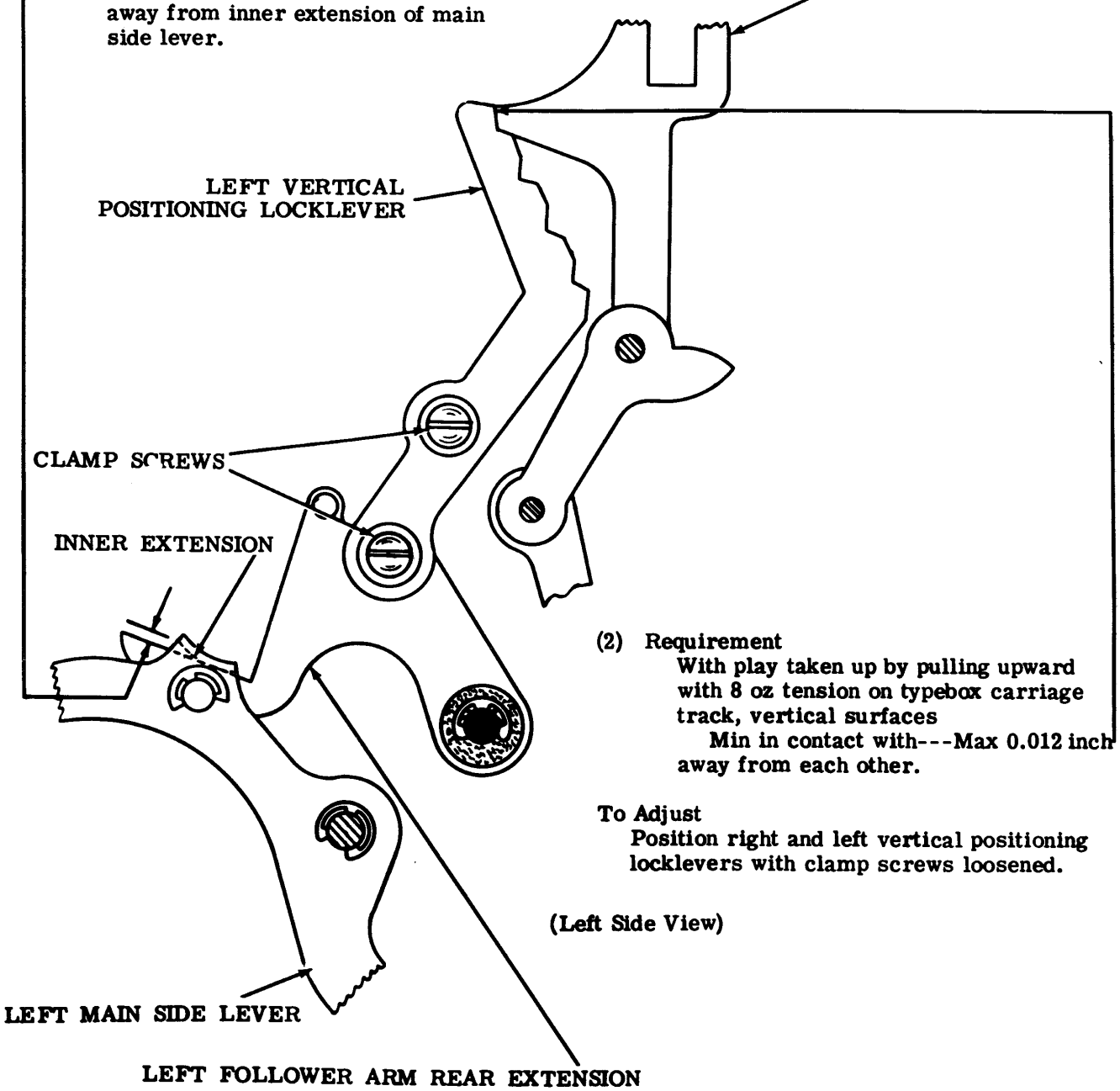

(2) Requirement
With play taken up by pulling upward with 8 oz tension on typebox carriage track, vertical surfaces
Min in contact with---Max 0.012 inch away from each other.

To Adjust
Position right and left vertical positioning locklevers with clamp screws loosened.

(Left Side View)

2.35 Spacing Mechanism (continued)

(A) SPACING TRIP LEVER BAIL CAM PLATE

Requirement
Spacing trip lever arm in upward position. Typebox clutch rotated through approximately one-half of its cycle. All function pawls disengaged from function bars. Clearance between top surface of trip lever arm extension and spacing trip lever shoulder
Min 0.010 inch---Max 0.040 inch

To Adjust
Position cam plate on rocker shaft with mounting screws loosened. Position forward edge of cam plate parallel to shaft.

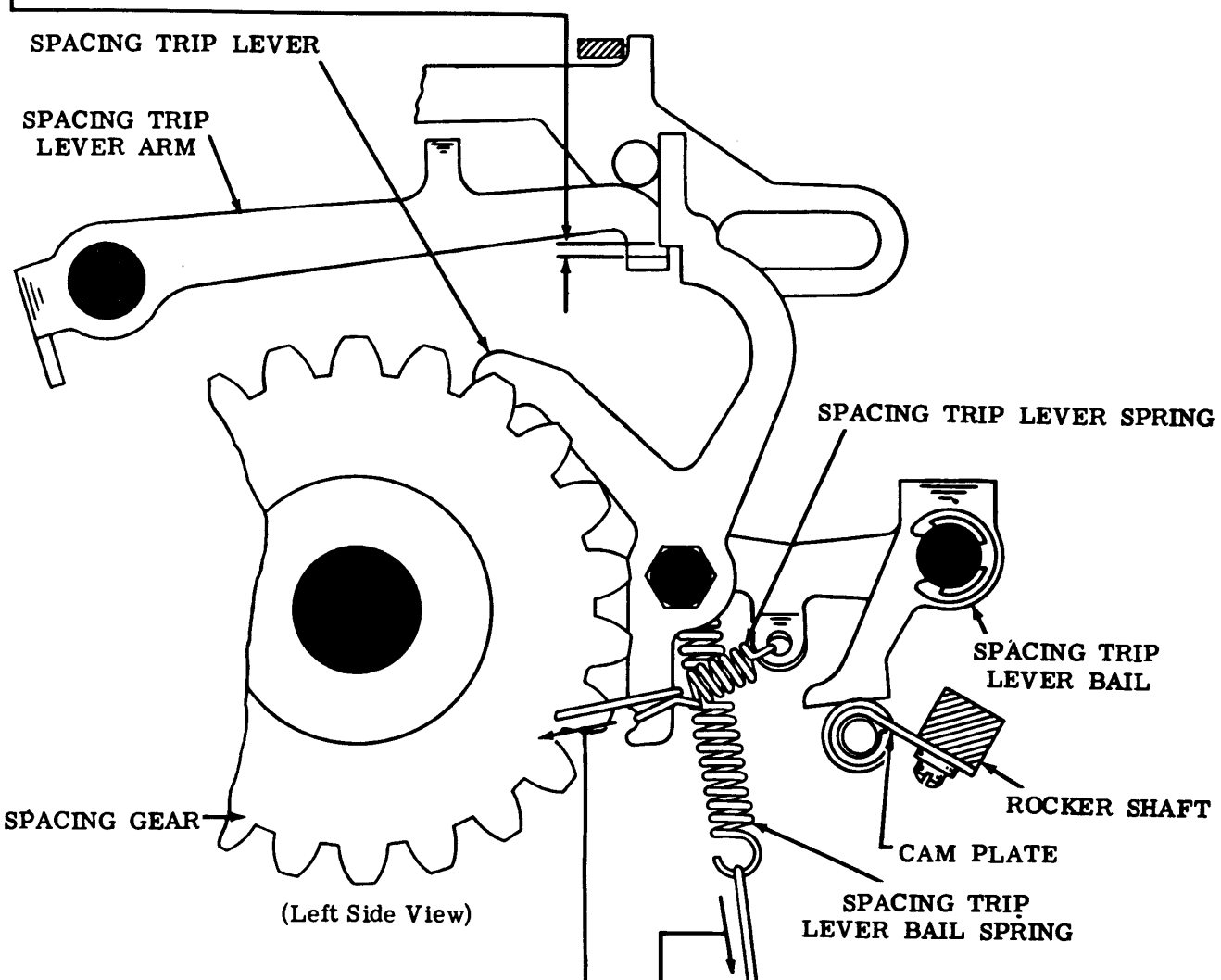

(Left Side View)

(B) SPACING TRIP LEVER SPRING

Requirement
Typebox clutch disengaged.
Min 2-1/2 oz---Max 5 oz
to start lever moving.

(C) SPACING TRIP LEVER BAIL SPRING

Requirement
Spacing trip lever bail against stop.
Spacing trip lever bail spring unhooked.
Min 8 oz---Max 12 oz
to pull spring to installed length.

2.36 Function Mechanism

(B) FUNCTION RESET BAIL SPRING

Requirement

With typing unit upside down, hold no. 1 codebar in its marking position so that no function bar is selected. Rotate the main shaft until the function reset bail springs are in their minimum length position. Place pull rod of 32 ounce scale between clutch trip shaft and space suppression bail, hook scale on front edge of reset bail (at middle of bail) and pull toward rear.

Min 10 oz---Max 22 oz to start bail moving.

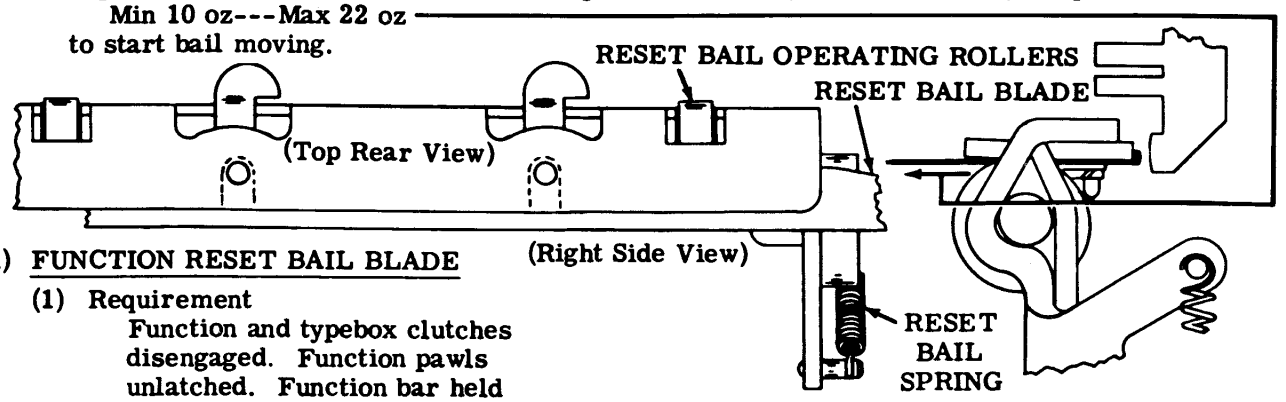

(A) FUNCTION RESET BAIL BLADE

(1) Requirement

Function and typebox clutches disengaged. Function pawls unlatched. Function bar held in maximum rearward position. Clearance between function bar and reset bail blade

Min 0.018 inch---Max 0.035 inch

To Check

Measure clearance at bars located in stunt box slots 1, 4, 11, 18, 23, 33, 38, and 41. If there is no bar in a designated slot, use nearest bar. If there is a bar on each side of a designated vacant slot, use bar in highest numbered slot. (Note: Facing rear of unit, slots are numbered from left to right.)

To Adjust

Position blade on reset bail with its mounting screws friction tight.

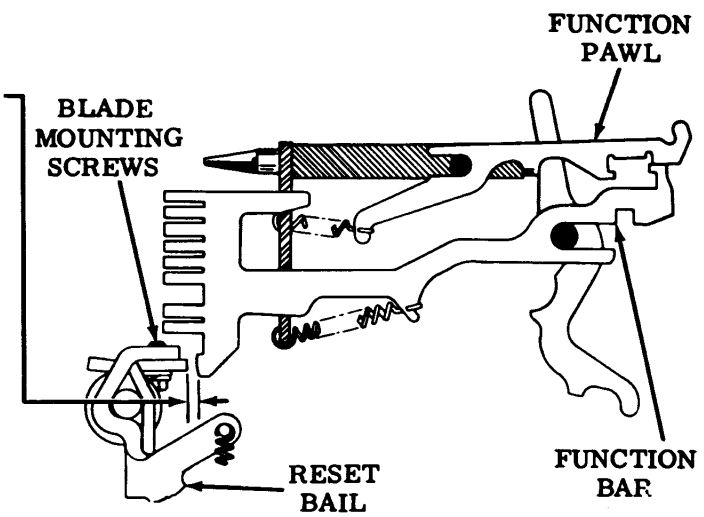

(2) Requirement

Function pawl should overtravel function bar by Min 0.002 inch

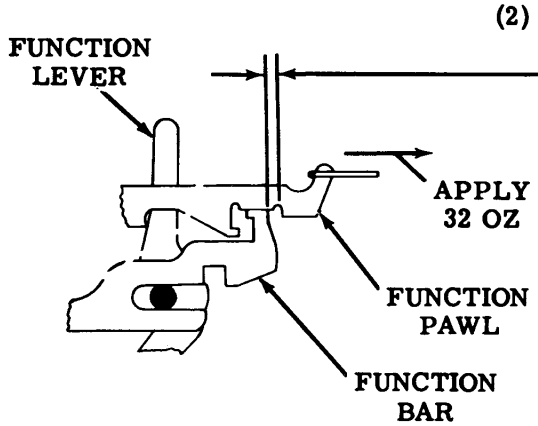

(Right Side View)

To Check

If carriage return lever adjustment has not been made, its clamp screw should be loosened. Position function clutch so that lug on clutch disc is toward bottom of unit. Strip off any selected function pawls. Hold function lever in maximum rearward position (do not put over 2 lb of tension on lever) and hold function pawl to rear with a tension of 32 oz. (As load on reset bail affects overtravel, do not latch more than one pawl at a time.) Measure clearance. Repeat for each function pawl on stunt box.

To Adjust

If necessary, refine Requirement (1) within the following limits

Min 0.018 inch---Max 0.035 inch

2.37 Positioning Mechanism (continued)

(A) REVERSING SLIDE DETENT SPRING

Requirement

Slide in left hand position. Scale hooked in upper right hand detent notch. Min 2 oz---Max 4-1/2 oz to start detent moving.

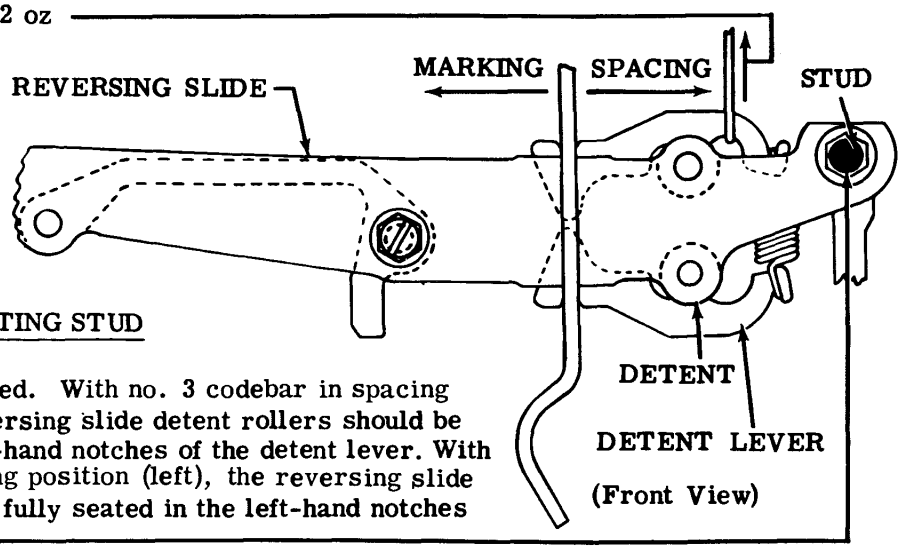

(B) REVERSING SLIDE ADJUSTING STUD

Requirement

Typebox clutch disengaged. With no. 3 codebar in spacing position (right), the reversing slide detent rollers should be fully seated in the right-hand notches of the detent lever. With no. 3 codebar in marking position (left), the reversing slide detent rollers should be fully seated in the left-hand notches of the detent lever.

To Adjust

Position the reversing slide stud in its elongated hole with its mounting nut loosened.

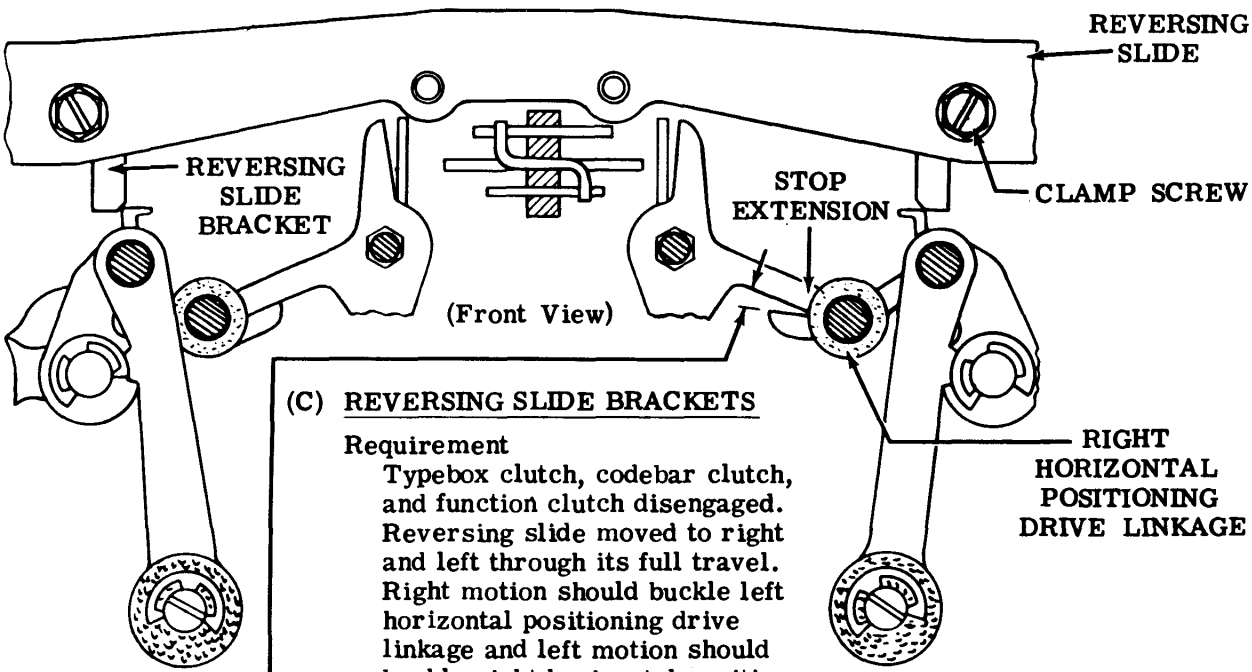

(C) REVERSING SLIDE BRACKETS

Requirement

Typebox clutch, codebar clutch, and function clutch disengaged. Reversing slide moved to right and left through its full travel. Right motion should buckle left horizontal positioning drive linkage and left motion should buckle right horizontal positioning drive linkage. The amount of buckling in each case should be Min 0.035 inch---Max 0.050 inch measured at point of maximum clearance.

To Adjust

Position each reversing slide bracket with its clamp screw loosened.

2.38 Positioning Mechanism (continued)

HORIZONTAL POSITIONING DRIVE LINKAGE

(1) Requirement

Typebox clutch disengaged. Codebars in spacing position. Clearance between longest horizontal stop and positioning linkage slides

Min 0.090 inch---Max 0.110 inch

clearance at two sides should be equal within 0.008 inch, with positioning linkage in straight position. Move reversing slide to right and left to check both sides.

To Adjust

Loosen two screws in drive linkage bearing posts and two screws in bearing posts tie bar. With reversing slide in right hand position, locate right hand bearing post so clearance between longest horizontal stop and right hand positioning lever slide

Min 0.095 inch---Max 0.105 inch

Tighten two screws in bearing posts tie bar. Do not tighten bearing posts mounting screws. Move reversing slide to left hand position, check clearance between longest horizontal stop and left hand positioning lever slide. Equalize clearance at right and left positioning slides within 0.008 inch by moving two bearing posts as a unit.

(2) Requirement

Horizontal positioning mechanism should be free of jams or binds.

To Check

Typebox clutch disc should have some movement in the normal direction of rotation in the stop position.

Note: Each positioning linkage should return freely to its straight position after buckling. Recheck REVERSING SLIDE BRACKETS (2.37).

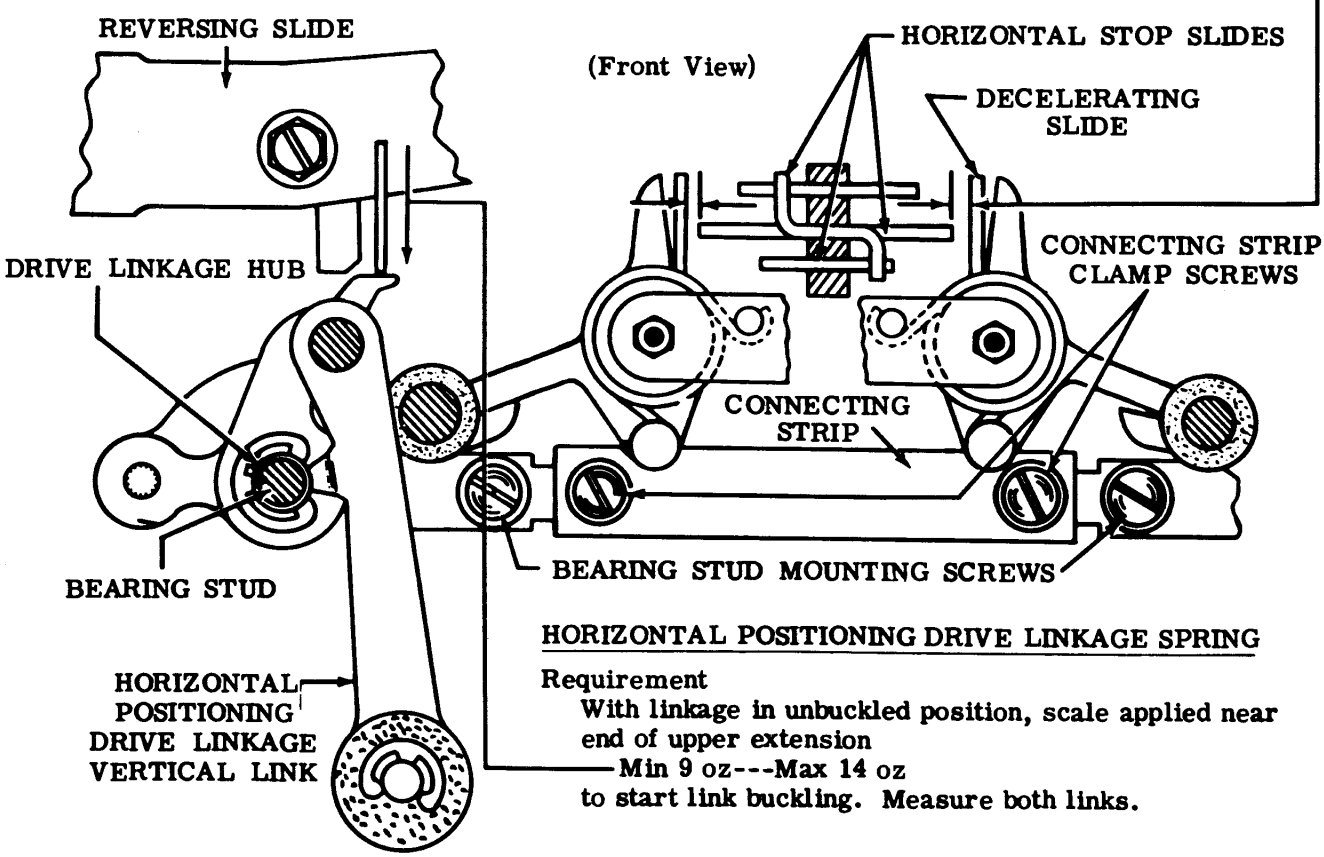

HORIZONTAL POSITIONING DRIVE LINKAGE SPRING

Requirement

With linkage in unbuckled position, scale applied near end of upper extension

Min 9 oz---Max 14 oz

to start link buckling. Measure both links.

2.39 Positioning Mechanism (continued)

SHIFT LINKAGE (PRELIMINARY)

Requirement

With codebar and typebox clutches disengaged Min 0.030 inch---Max. 0.050 inch between shift breaker slide and pad on shift link, with link buckled and shift breaker slide pushed upwards against stop. Clearance at two sides equal within 0.010 inch.

To Adjust

Position shift link mounting brackets up or down by means of play in mounting holes.

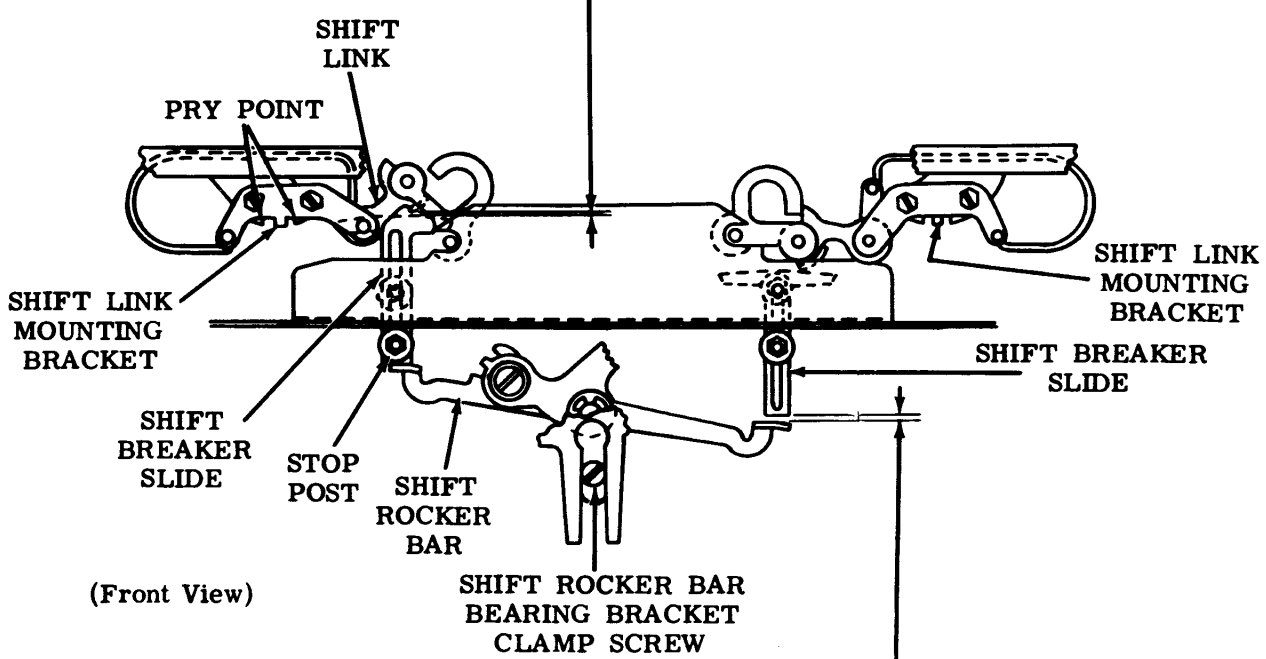

(Front View)

SHIFT ROCKER BAR BEARING BRACKET

Requirement

Note: Verify SHIFT ROCKER LEVER (2.41) before proceeding with this adjustment.

Codebar and typebox clutches disengaged. Clearance between shift rocker bar and lower end of right shift breaker slide Min 0.050 inch---Max 0.070 inch Check left side in similar manner.

To Check

Raise left end of shift rocker bar to uppermost position, holding left shift breaker slide against stop. Make sure right shift link is straight, and hold right shift breaker slide against shift link pad.

To Adjust

Position shift rocker bar bearing bracket with clamp screw friction tight.

2.40 Positioning Mechanism (continued)

HORIZONTAL SHIFT LINK SHOCK ABSORBER SPRING

Requirement

Typebox carriage at left side of typing unit. Right hand shift link in straight or unbuckled position.

Min 10 lb---Max 12 lb to start shock absorber slide moving.

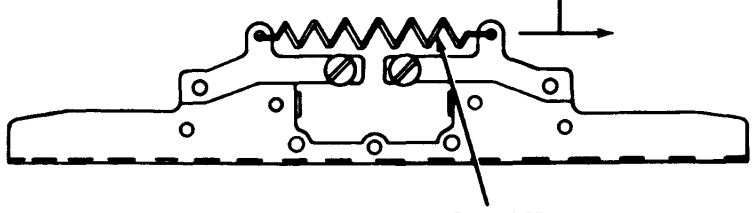

(Front View)

DECELERATING SLIDE SPRING

Requirement

Printing bail in downward position. Printing carriage and decelerating slide assembly in right hand position.

Min 1/2 oz---Max 1-1/2 oz to start the slide moving. With the printing carriage and decelerating slide in their left hand position, check the left hand decelerating slide spring.

(Front View)

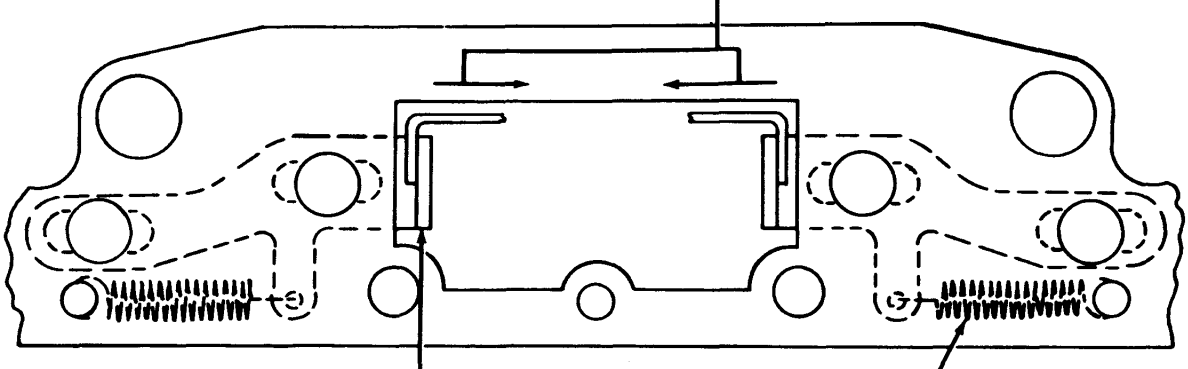

2.41 Positioning Mechanism (continued)

SHIFT ROCKER LEVER

Requirement

With the codebar bail arm assembly roller on the high part of the cam, make a left and right shift selection. On each shift selection measure the clearance between the raised end of the shift rocker bar and the lower end of the associated shift breaker slide. On the shift selection which yields the smaller clearance, take up the play in an upward direction at the lower end of the shift rocker lever with a force of 2 ounces. The resulting clearance should be equal within 0.010 inch to the clearance between the raised end of the shift rocker bar and the lower end of the associated shift breaker slide when the opposite shift selection is made.

To Adjust

Loosen shift rocker lever clamp screw friction tight and position shift rocker lever. Tighten clamp screw.

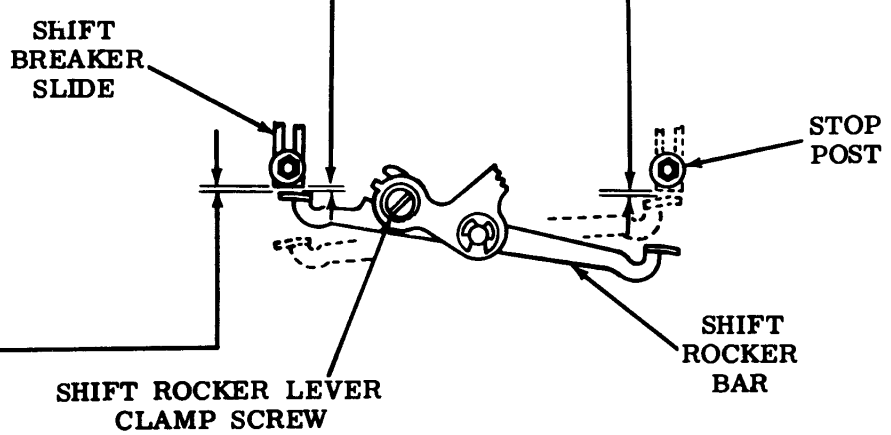

(Front View)

SHIFT DRIVE PAWL OPERATING BAIL

Requirement

With shift drive pawl operating bail cam follower on high dwell of cam, clearance between shift rocker bar and lower end of raised shift breaker slide

Min 0.005 inch---Max 0.025 inch

when slide is held against stop. To be held within

Min 0.005 inch---Max 0.035 inch

when the 0.010 inch parallel requirement is held in the SHIFT ROCKER LEVER adjustment.

To Adjust

Position operating bail cam follower arm by means of its clamp screw. Recheck SHIFT ROCKER LEVER adjustment.

SHIFT ROCKER BAIL SPRING (For Applicable Units)

Requirement

Position the shift rocker bail alternately in the letters or figures position.

While spring is extended it should require

Min 2 oz---Max 6 oz

to pull spring to its installed length.

2.42 Positioning Mechanism (continued)

SHIFT DRIVE PAWL GUIDE BRACKET

Requirement
Codebar clutch disengaged. Bail arm assembly spring removed. Movement of its bail arm assembly should cause shift drive pawl to move freely in its guide bracket throughout its entire travel. Clearance between shift drive pawl and bottom of slot in guide bracket
Min Some---Max 0.010 inch

To Adjust
Position shift drive pawl guide bracket with clamp screw and clamp nut loosened friction tight. Recheck requirement after guide bracket is tightened.

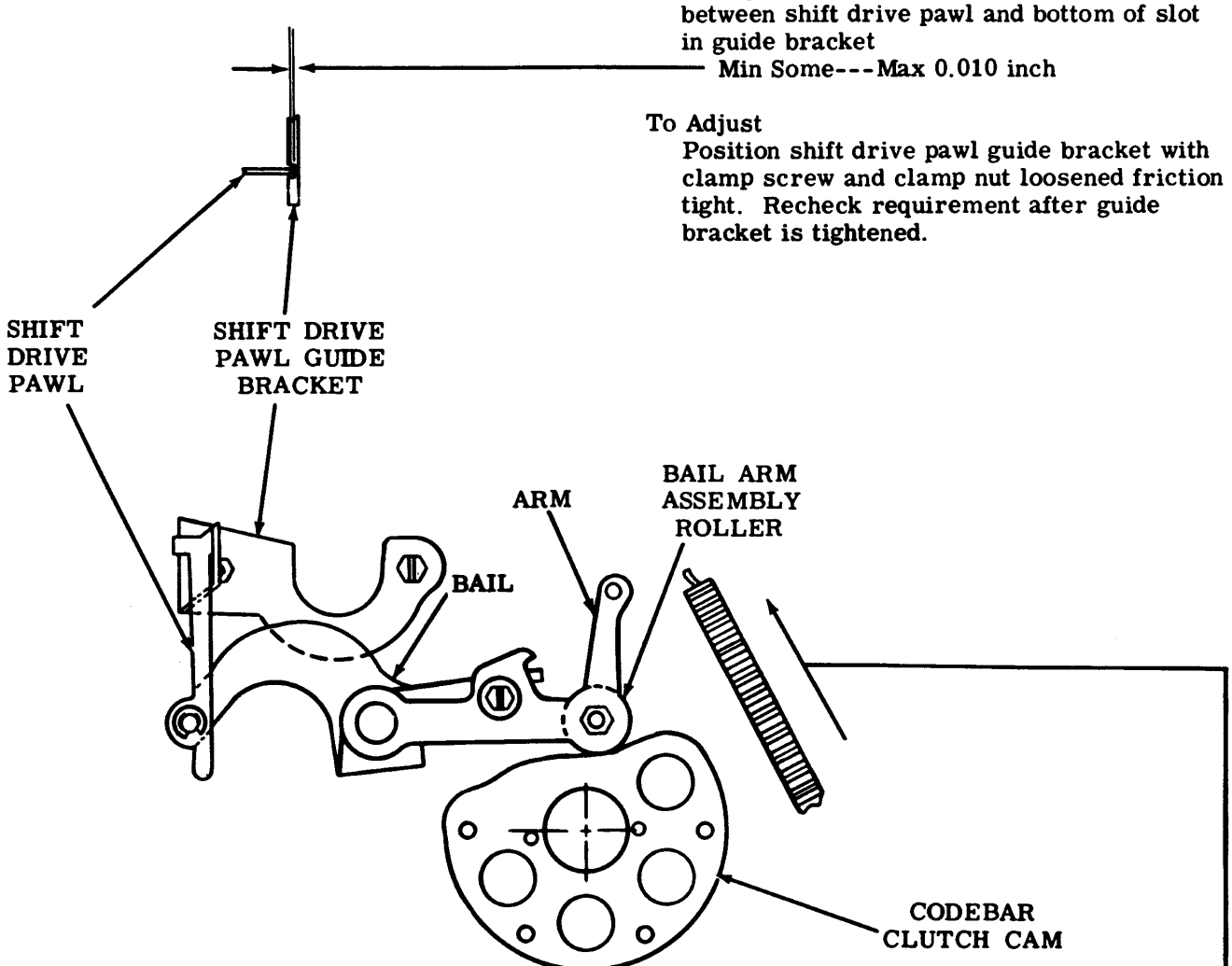

(Bottom View)

BAIL ARM ASSEMBLY SPRING

Requirement
Drive pawl bail arm assembly on low part of cam. Unhook spring.
Min 6 oz---Max 12 oz
to pull spring to installed length.

2.43 Positioning Mechanism (continued)

SHIFT SELECTOR ARM BELLCRANK

Requirement

Shift pushlever in marking position (toward front), selector clutch and codebar clutch disengaged. Shift pawl should clear end of shift drive pawl bearing post.

Min 0.005 inch---Max 0.020 inch

Note: On units containing storage mechanism, shift pushlever in spacing position (toward rear), shift intermediate storage lever marking, selector clutch and codebar clutch disengaged. Shift pawl should clear end of shift drive pawl bearing post.

Min 0.005 inch---Max 0.020 inch

Recheck INTERMEDIATE ARM BACKSTOP BRACKET (2.15). Refine requirement above.

To Adjust

Loosen shift selector arm bellcrank clamp screw friction tight. Position to meet requirement.

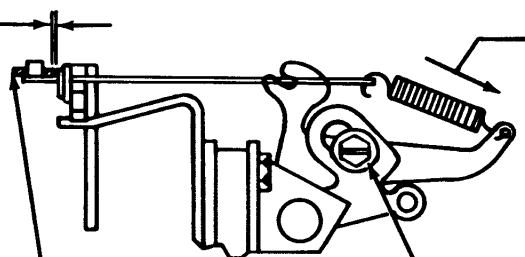

SHIFT PAWL SELECTOR LINK YIELD SPRING

Requirement

Shift pushlever in marking position, selector clutch and codebar clutch disengaged

Min 5 oz---Max 7 oz

to pull spring to installed length.

2.44 Spacing Mechanism (continued)

Note: Check related adjustments, (See 2.48, 2.55, and 2.56) if the following adjustments are remade.

OSCILLATING RAIL SLIDE POSITION FRICTION FEED

Requirement

Right end of oscillating rail slide should clear edge of pulley

Min 0.025 inch---Max 0.050 inch

To Check

Locate spacing cut-out arm and automatic carriage return-line feed arm (if used) in maximum counterclockwise position on spacing drum. Spacing clutch disengaged. Feed pawl which is farthest advanced engaging tooth immediately above cutaway section of ratchet.

To Adjust

Position slide on wire rope with clamp screws loosened.

(See 2.77 for similar type of adjustment for sprocket feed typing unit.)

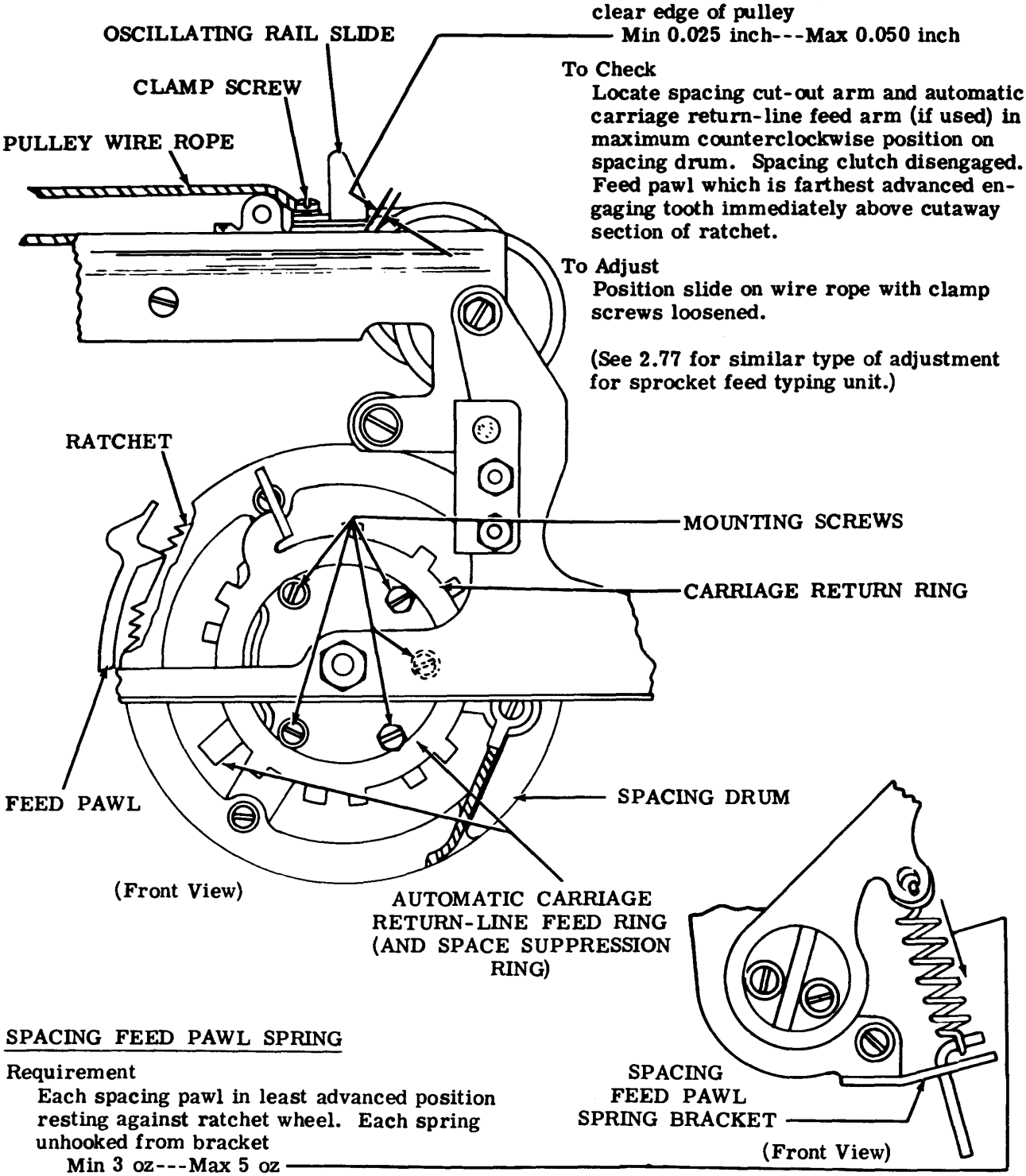

SPACING FEED PAWL SPRING

Requirement

Each spacing pawl in least advanced position resting against ratchet wheel. Each spring unhooked from bracket

Min 3 oz---Max 5 oz

to pull springs to installed length.

2.45 Spacing Mechanism (continued)

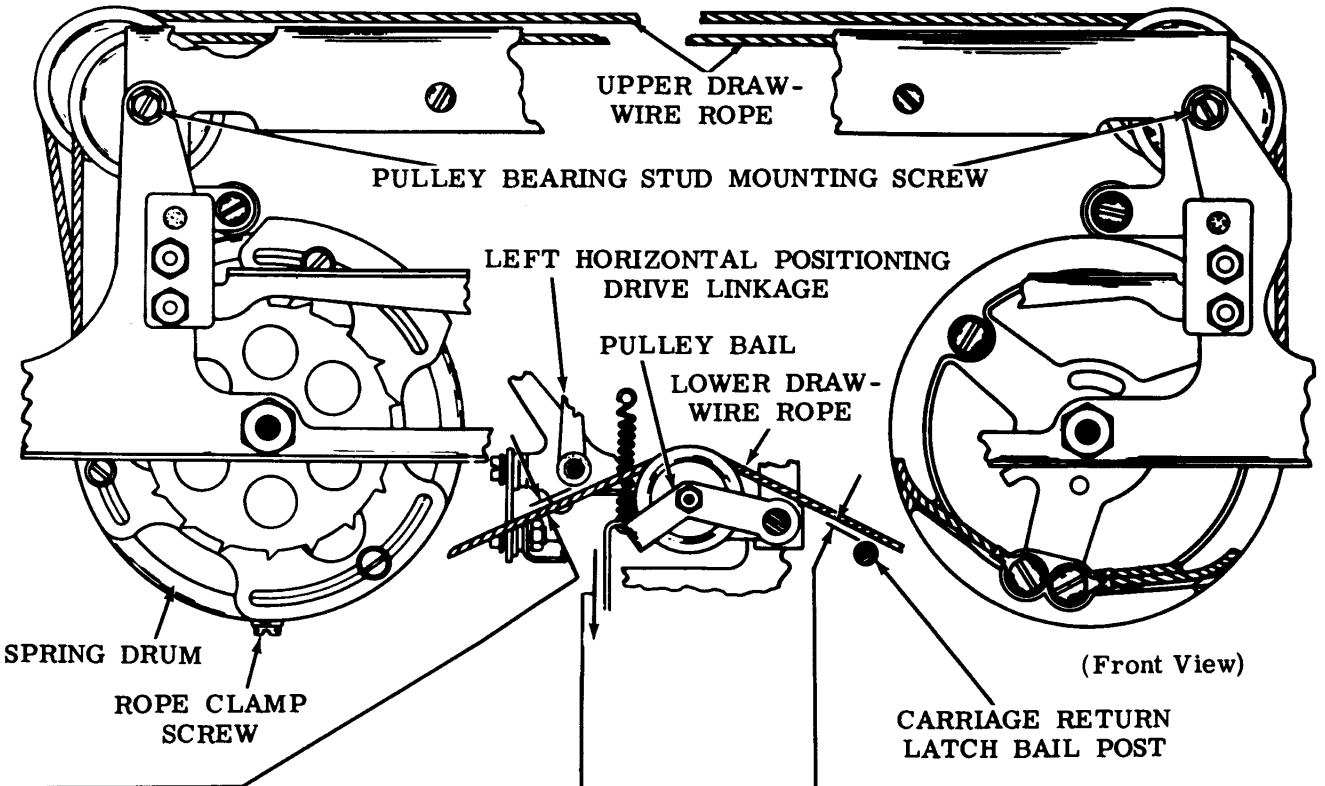

LOWER DRAW-WIRE ROPE PULLEY BAIL SPRING

Requirement
Spring unhooked from pulley bail, bail extension resting on opening in front plate.
Min 26 oz---Max 30 oz
to pull spring to position length.

CARRIAGE DRAW-WIRE ROPE

Requirement
Clearance between lower draw-wire rope and carriage return latch bail post should be
Min 0.006 inch
With the horizontal positioning mechanism in its lowest position, clearance between the lower draw-wire rope and the left horizontal positioning drive linkage should be
Min 0.030 inch

To Adjust
Advance printing carriage to extreme left hand position. Rotate typebox clutch 1/2 revolution. Loosen rope clamp screw one turn only. Position pulley bearing studs, with their mounting screws loosened, to meet requirement. Check that cable has moved around its equalizing clamp so that cables have equal tension (gauge by feel). Tighten clamp screw. Check related typebox position adjustment (2.77).

2.46 Spacing Mechanism (continued)

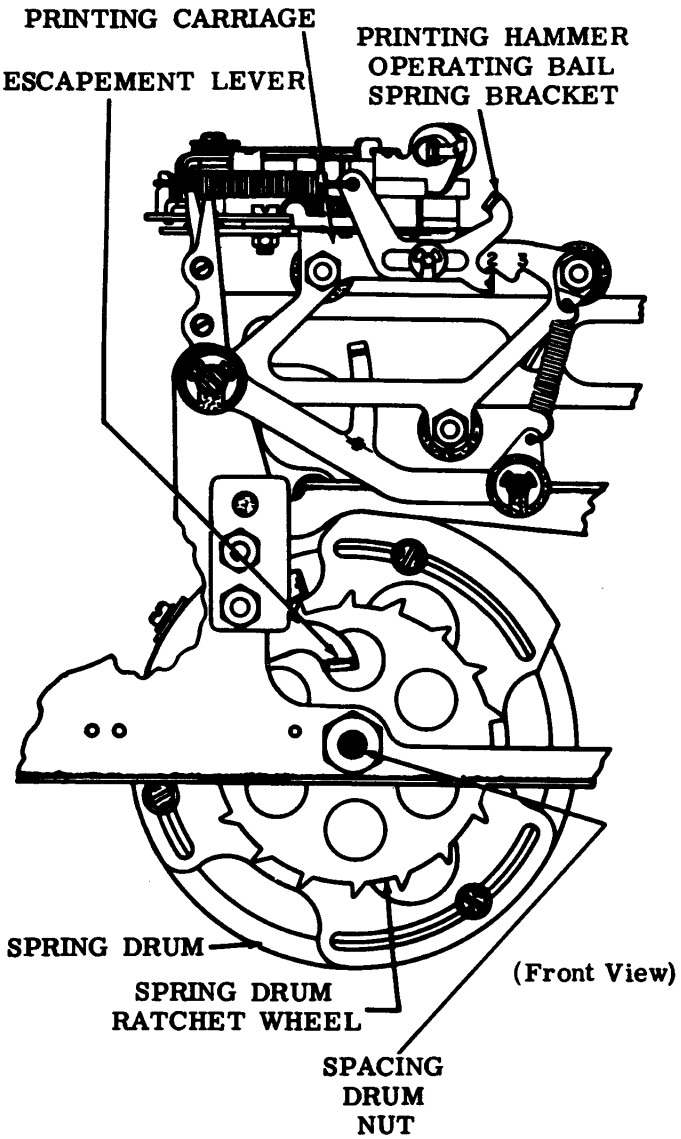

CARRIAGE RETURN SPRING

Requirement
Pull required to start drum moving
Min 3-1/2 lb---Max 4-1/4 lb

To Check
Spacing drum in returned position. Printing track in lowest position. Remove lower cable roller and print hammer carriage stabilizer springs. Hold spacing pawls, buffer slide, and carriage return latch to prevent interference with spacing drum.

To Adjust
Spring drum nut loosened. Rotate spring drum ratchet wheel to increase tension. Operate escapement lever to decrease tension.

SPACING FEED PAWL RELEASE LINK SPRING

Requirement
Min 1/2 oz---Max 2-1/2 oz to start link moving.

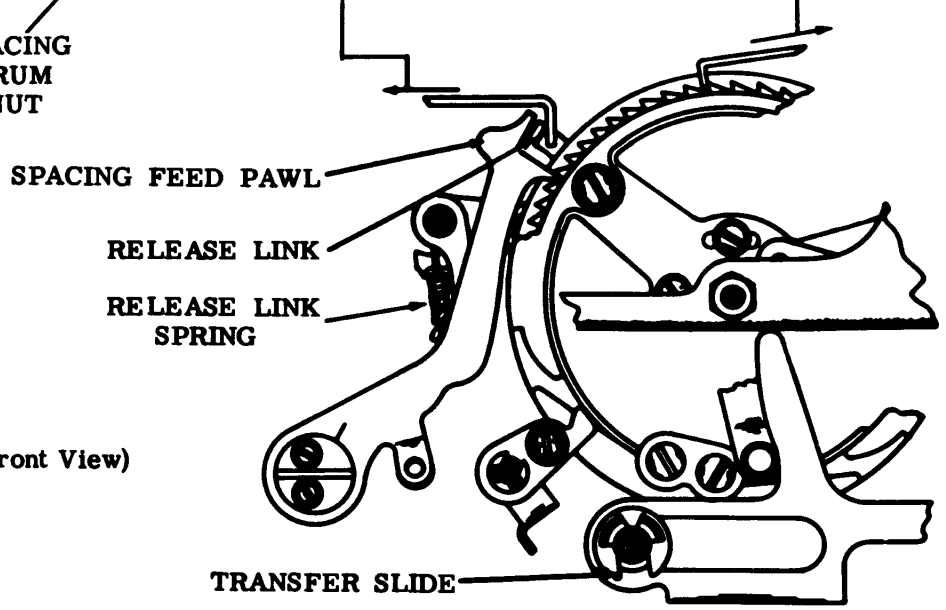

2.47 Printing Mechanism

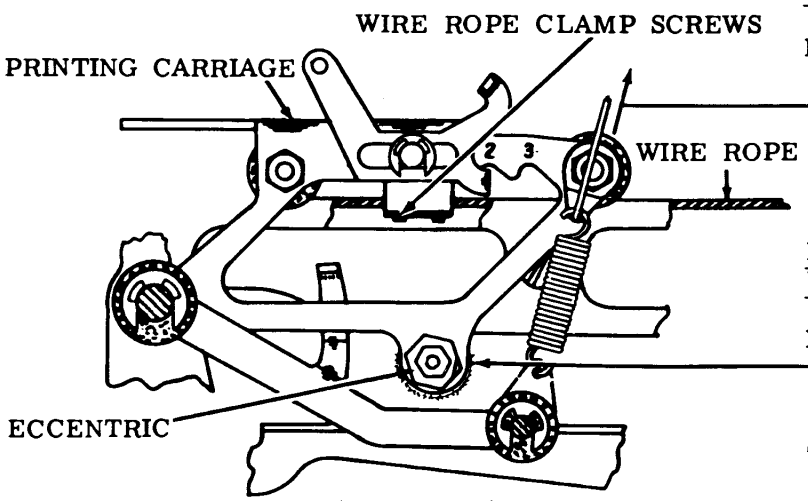

(Front View)

STABILIZING SPRING

Requirement
Typebox clutch disengaged
Min 5 oz---Max 8 oz
to pull spring to installed length.

PRINTING CARRIAGE LOWER ROLLER

Requirement
Carriage vertical play on track minimum without binding.

To Adjust
Position eccentric of lower roller with screw nut loosened. Keep high part of eccentric (chamfered corner) toward right.

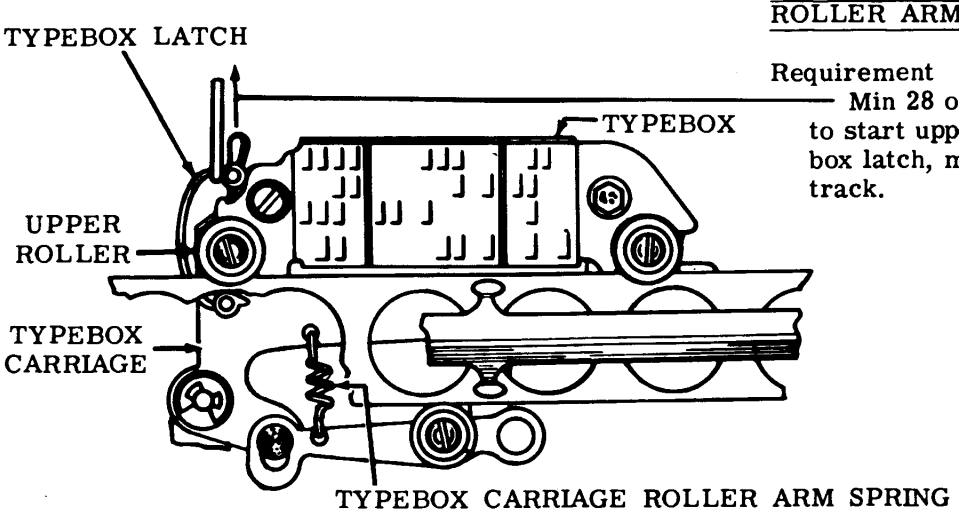

(Rear View)

TYPEBOX CARRIAGE ROLLER ARM SPRING

Requirement
Min 28 oz---Max 36 oz
to start upper roller, nearest typebox latch, moving away from carriage track.

2.48 Spacing Mechanism (continued)

CARRIAGE RETURN LATCH BAIL

Requirement
Carriage fully returned. Play in carriage return bail taken up to right by holding right side of bail against its retainer. Clearance between carriage return latch bail and carriage return lever
Min 0.004 inch---Max 0.040 inch

To Adjust
Position latch bail plate with clamp screw loosened.

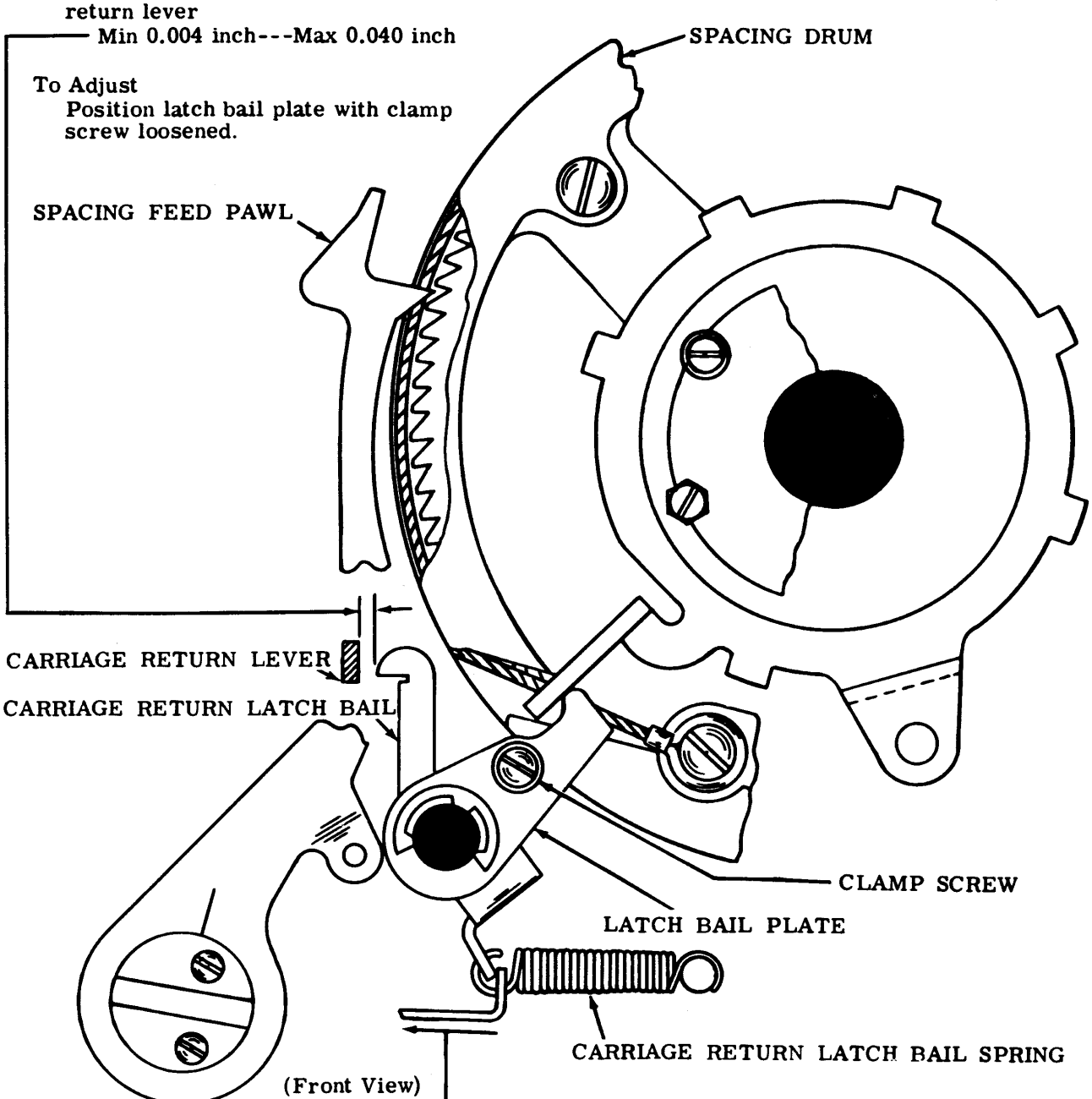

CARRIAGE RETURN LATCH BAIL SPRING

Requirement
Spacing drum fully returned
Min 3 oz---Max 4-1/2 oz
to start latch bail moving.

2.49 Spacing Mechanism (continued)

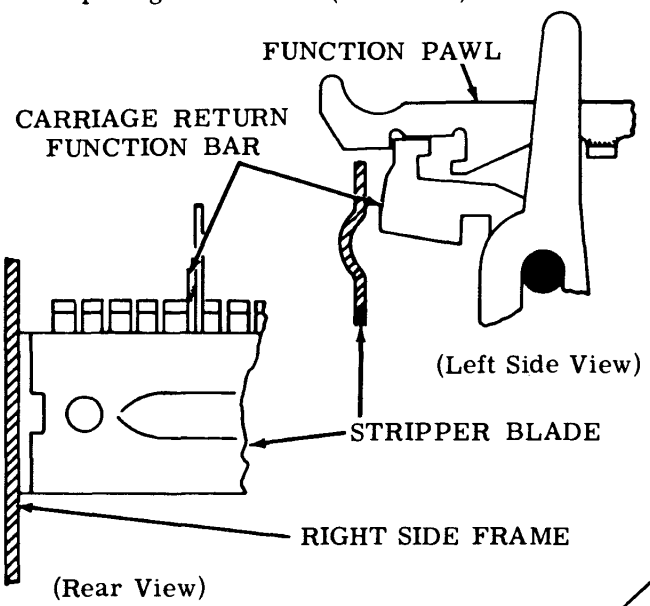

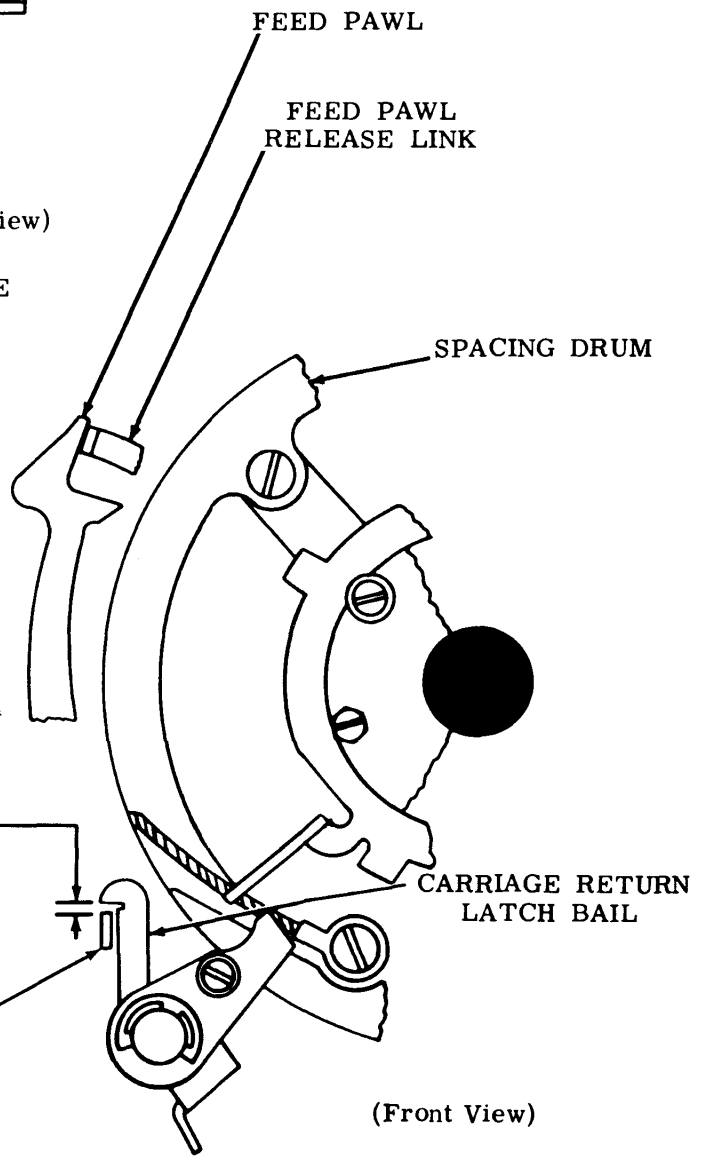

CARRIAGE RETURN LEVER

Requirement (Units Equipped with One-Stop Function Clutch)

Carriage return function set up on selector. Main shaft rotated until function clutch stop-lug is toward bottom of unit. Carriage return function pawl hooked over its function bar. Spacing drum held so that carriage return latch bail is latched. Clearance between latch bail and carriage return lever

Min 0.006 inch---Max 0.035 inch

To Adjust

Position carriage return lever on carriage return bail with clamp screw loosened.

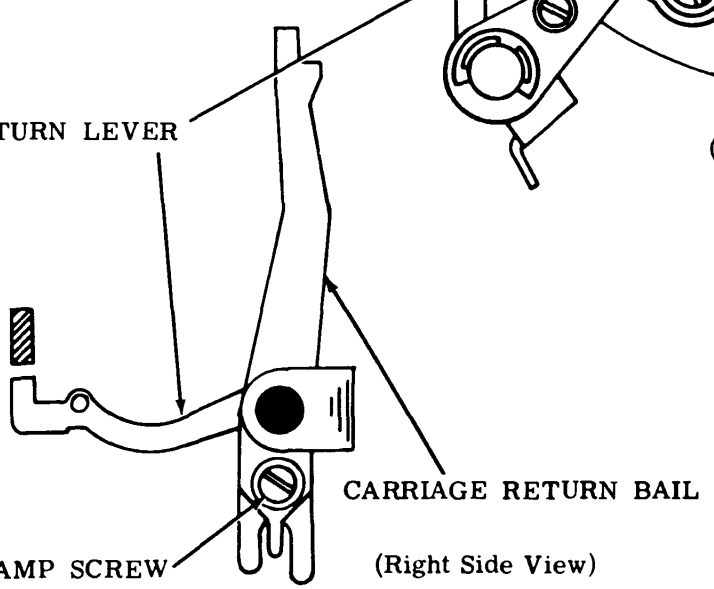

2.50 Spacing Mechanism (continued)

DASHPOT VENT SCREW

Requirement
Typebox carriage should return from any length of line without bouncing.

To Check
Printer operated at any speed from automatic transmission with one CR and one LF signal between lines. First character of each line should be printed in same location as if unit was manually operated slowly.

To Adjust
Turn down vent screw until slight pneumatic bounce is perceptible. Back off screw until effect disappears, then back screw off 1/4 turn. Tighten nut.

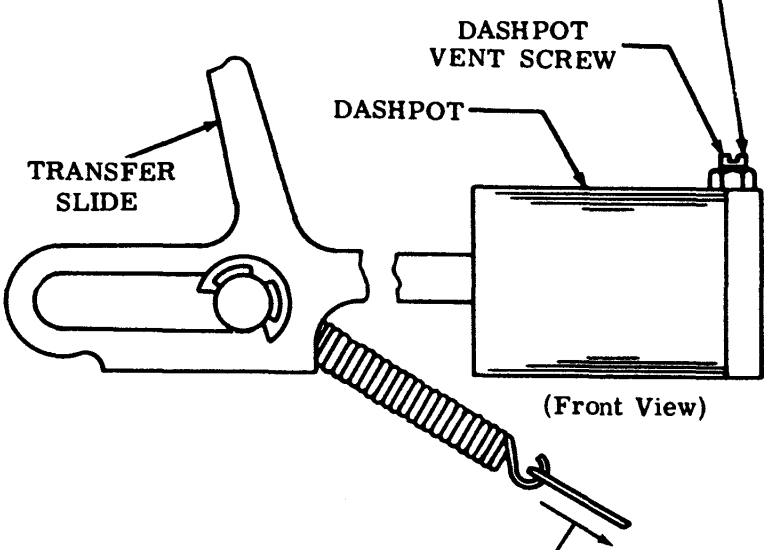

TRANSFER SLIDE SPRING

Requirement
Transfer slide in extreme left position.
Spring unhooked.
Min 3-1/2 oz---Max 4-1/2 oz
to pull spring to installed length.

2.51 Printing Mechanism (continued)

Note: Check related adjustments (2.44, 2.46, and 2.56), if the following adjustments are remade.

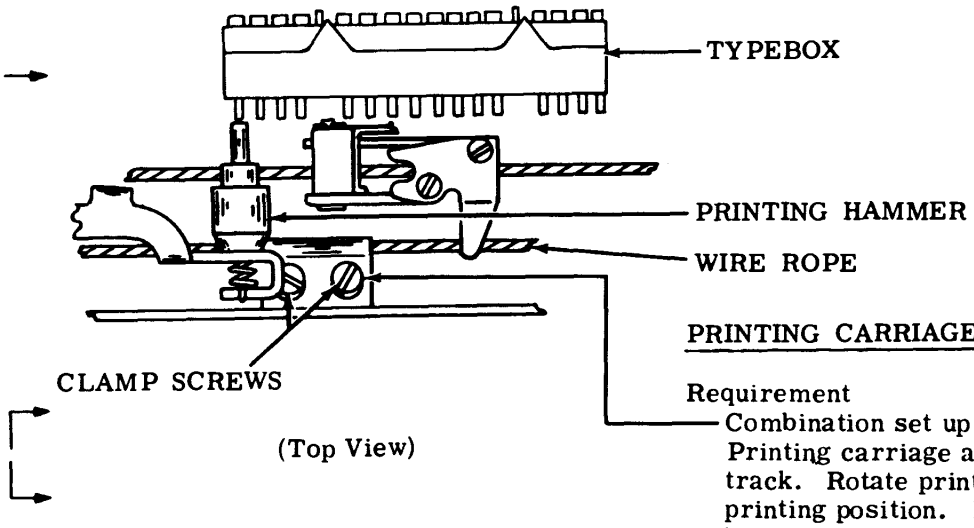

PRINTING CARRIAGE POSITION

Requirement

Combination set up to print an apostrophe. Printing carriage at approximate midpoint of track. Rotate printer shaft so typebox is in printing position. Proper type pallet should be approximately in center of printing hammer

To Adjust

Position printing carriage on wire rope with clamp screw loosened.

Note: Take up play in typebox carriage alternately in each direction. Secure carriage at point where print hammer is approximately center of play.

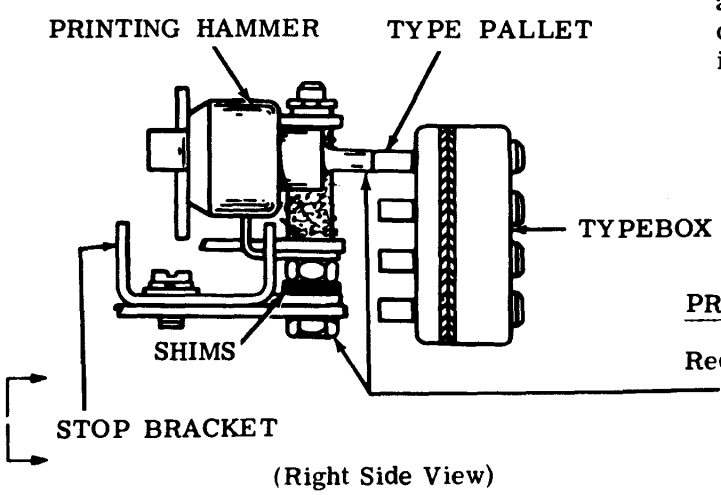

PRINTING HAMMER BEARING STUD

Requirement

Print hammer in contact with type pallet in top row, eighth from right. The hammer face should be fully on the end of the type pallet.

To Adjust

Add or remove shims between shoulder on bearing post and stop bracket. When checking, take up play in hammer operating bail downward on post.

2.52 Positioning Mechanism (continued)

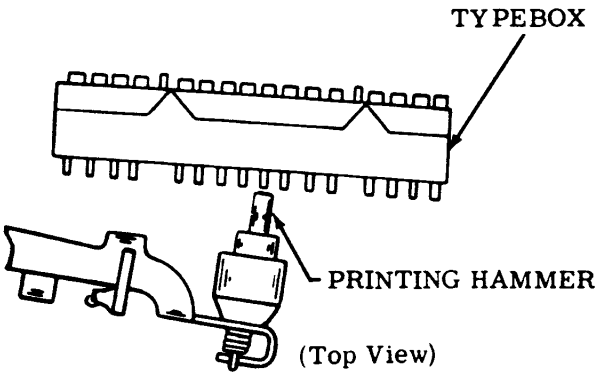

(A) SHIFT LINKAGE (FINAL)

Requirement
Typebox in position to print eighth character from right in the top row at midpoint of platen. Proper type pallet should align with print hammer.

To Adjust
Position oscillator left hand shift link bracket with two clamp screws loosened. With printer operating alternate characters (& and C), refine adjustment for correct alignment if necessary.

Note: Take up typebox carriage play in both directions and set print hammer to approximate center of play, as gauged by eye.

Do not disturb preliminary adjustment (2.39).

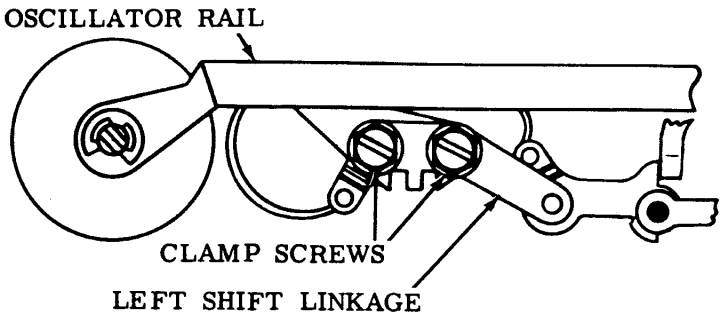

(Front View)

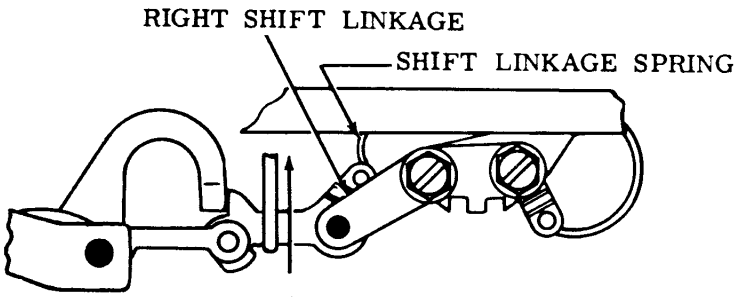

(Front View)

(B) SHIFT LINKAGE SPRING

Requirement
Link in straight position
Min 6 oz---Max 14 oz
to start each link moving.
Measure both right and left links.

2.53 Printing Mechanism (continued)

(A) PRINTING TRACK

Requirement

Printing track in its extreme downward position. Extreme right hand character selected. Printing hammer operating bail latching extension held with left face in line with the latch shoulder. Printing arm slide positioned alternately over each track mounting screw. Printing bail reset each time. Clearance between latching extension and operating bail latch should be

Min 0.015 inch---Max 0.040 inch

To Adjust

Position the printing track up or down with its mounting screws loosened. Hold clearance to maximum.

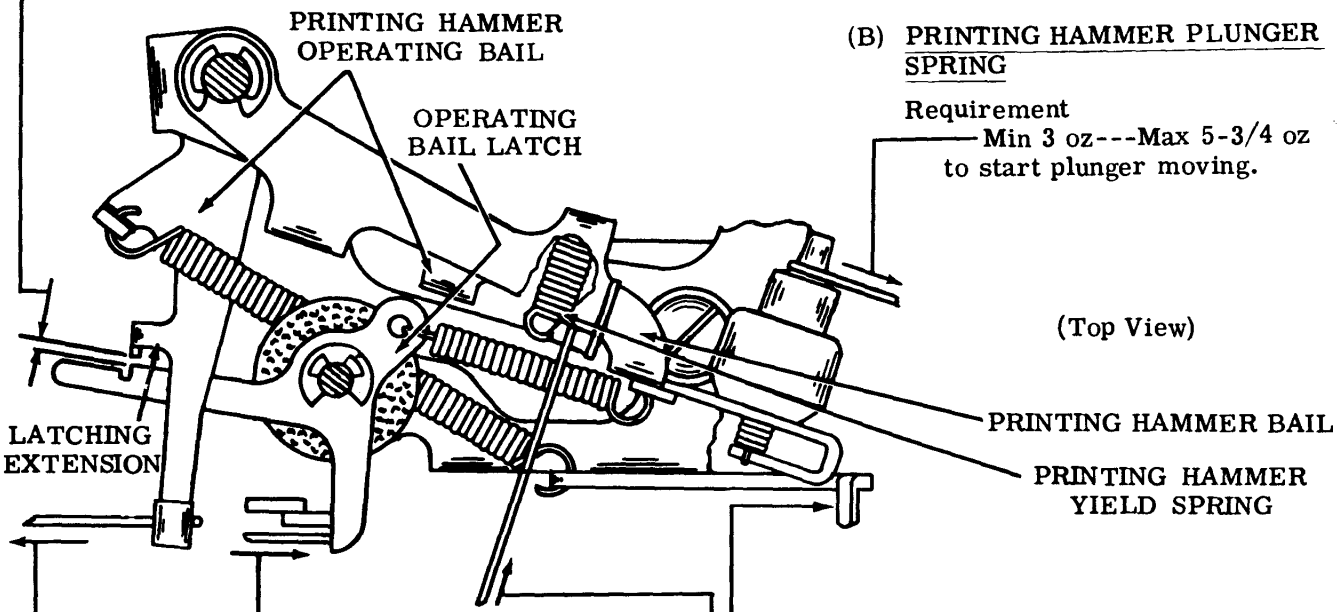

(B) PRINTING HAMMER PLUNGER SPRING

Requirement

Min 3 oz---Max 5-3/4 oz to start plunger moving.

(E) PRINTING HAMMER OPERATING BAIL LATCH SPRING (Not as Illustrated)

Requirement

Printing track in its extreme upward position

Min 3 oz---Max 4-1/2 oz to start latch moving.

(C) PRINTING HAMMER OPERATING BAIL SPRING

Requirement

Use notch no. 1 for printing one to three copies, no. 2 for four or five copies, and no. 3 for six or more copies.

To Adjust

Position spring adjusting bracket in required notch.

(F) PRINTING HAMMER OPERATING BAIL SPRING (Not as Illustrated)

Requirement

Operating bail latched. Spring adjusting bracket in left hand (no. 1) notch. Hammer yield spring unhooked

Min 10 oz---Max 13 oz to start bail moving.

(D) PRINTING HAMMER YIELD SPRING

Requirement

Printing hammer operating bail against its stop

Min 1 oz---Max 2-1/2 oz to start hammer bail moving (horizontal position).

2.54 Printing Mechanism (continued)

PRINTING HAMMER STOP BRACKET

Requirement

Printing hammer in upper left typebox position. Printing track in its max downward position. Printing hammer stop bracket held toward the platen with 8 oz of pressure. Clearance between printing hammer and upper left type pallet

Min 0.005 inch---Max 0.035 inch

check at both ends of platen.

Note: Refine this adjustment to 0.005 to 0.015 inch on sprocket feed printer, if necessary to improve copy legibility on multiple forms.

To Adjust

Position stop bracket by means of its two mounting screws.

Note: The printing hammer operating bail spring bracket positions no. 2 and 3 are to be used only for making multiple copies.

TYPE PALLET SPRING

Requirement

Typebox removed from the unit. 8 oz scale applied vertically to the end of the pallet shank.

Min 1/4 oz---Max 3/4 oz

to start pallet moving.

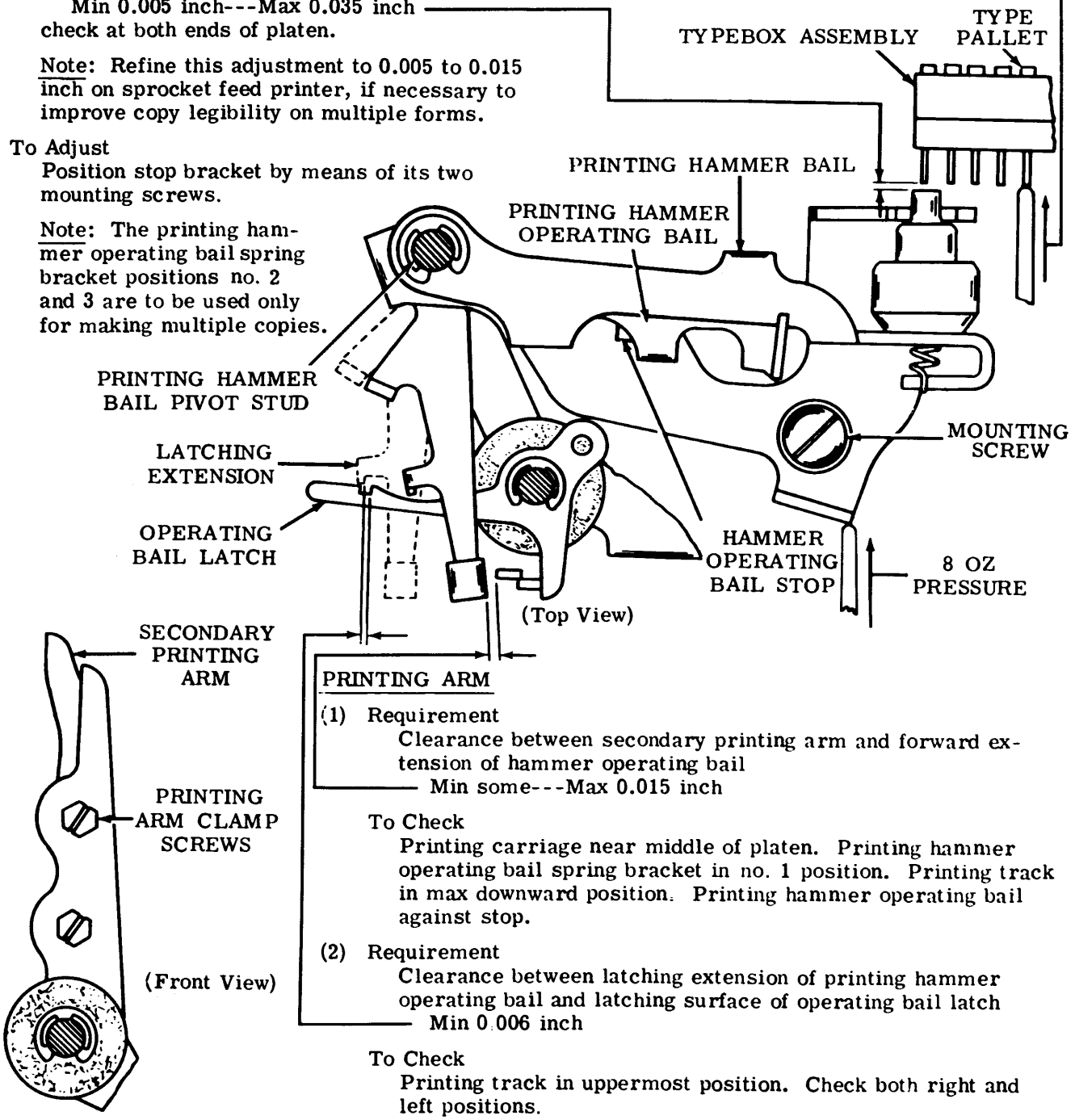

PRINTING ARM

(1) Requirement

Clearance between secondary printing arm and forward extension of hammer operating bail

Min some---Max 0.015 inch

To Check

Printing carriage near middle of platen. Printing hammer operating bail spring bracket in no. 1 position. Printing track in max downward position. Printing hammer operating bail against stop.

(2) Requirement

Clearance between latching extension of printing hammer operating bail and latching surface of operating bail latch

Min 0.006 inch

To Check

Printing track in uppermost position. Check both right and left positions.

To Adjust

Position secondary printing arm with clamp screws loosened.

2.55 Spacing Mechanism (continued)

Note 1: Check related adjustments (2.44, 2.48, and 2.56), if the following adjustments are remade.

Note 2: For sprocket feed units see 2.76 thru 2.83.

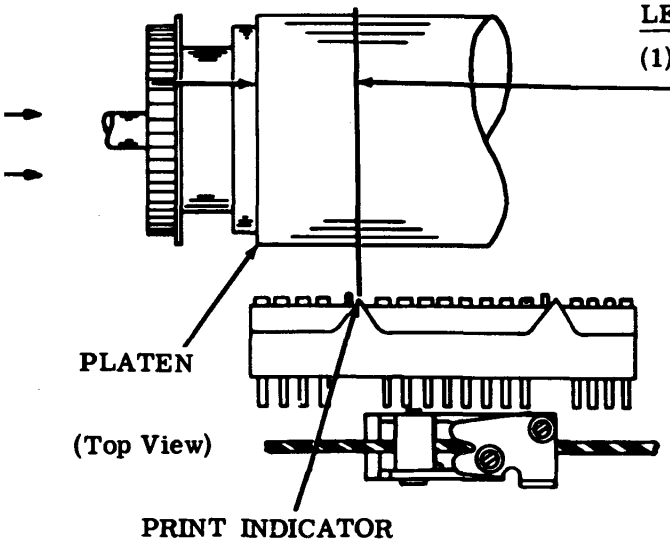

LEFT MARGIN

(1) Requirement (72 Character Line)
Typebox clutch disengaged. Spacing drum in returned position. Typebox shifted to left position. Clearance between left edge of platen and left print indicator
Min 15/16 inch---Max 1-1/16 inch
(In Bell System Switched-Network Services
Min 9/16 inch---Max 11/16 inch)

AUTOMATIC CR-LF BELLCRANK SPRING
(For Units So Equipped)

Requirement
Function clutch disengaged.
Min 2-1/2 oz---Max 7 oz
to move the bellcrank.

(2) Requirement
Spacing clutch disengaged. Front spacing feed pawl farthest advanced. Spacing drum fully returned. Play in spacing shaft gear (2.29) taken up clockwise. Clearance between pawl and shoulder of ratchet wheel tooth immediately ahead
Min some---Max 0.008 inch

(3) Requirement
Rear pawl, when farthest advanced, should rest at bottom of indentation between ratchet wheel teeth.

To Adjust
Shift typebox to left hand position. Return print carriage to its left position. Loosen four indicated carriage return ring mounting screws. Hold carriage return ring in its counterclockwise position. Locate typebox so its left indicator is in the required position. Tighten the four mounting screws.

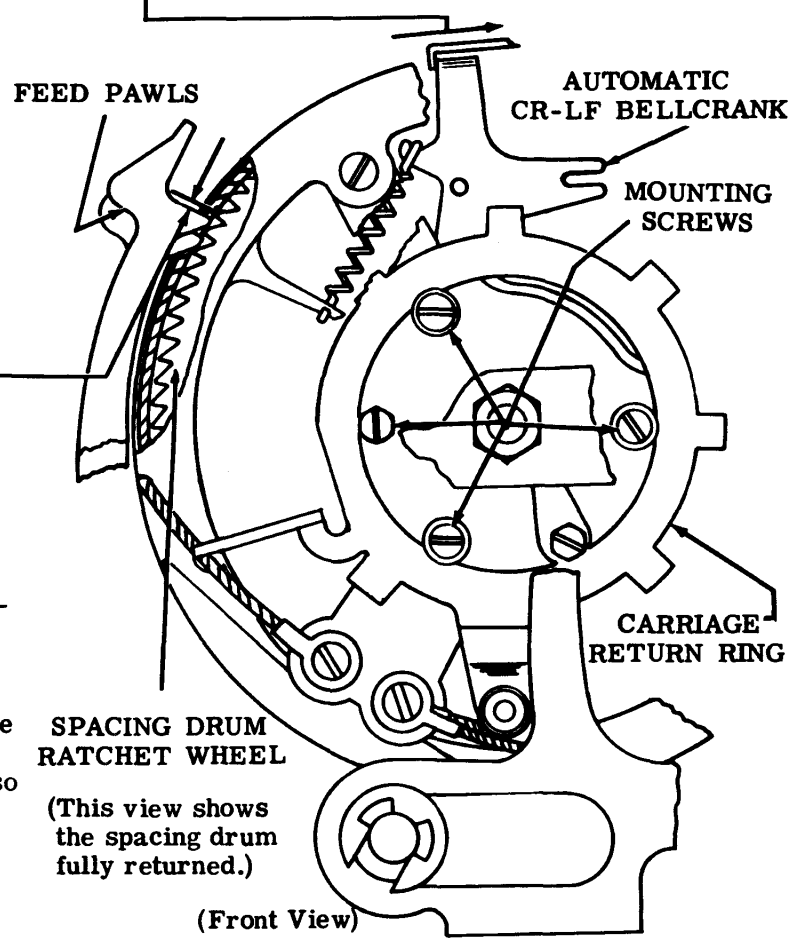

Note 3:. The left margin may be varied as required. Maximum range of adjustment for mechanisms with standard 10 characters per inch spacing is: friction feed platen 85 characters and sprocket feed platen 74 characters.

2.56 Spacing Mechanism (continued)

Note 1: Check related adjustments (2.36, 2.55, and 2.48), if the following adjustments are remade.

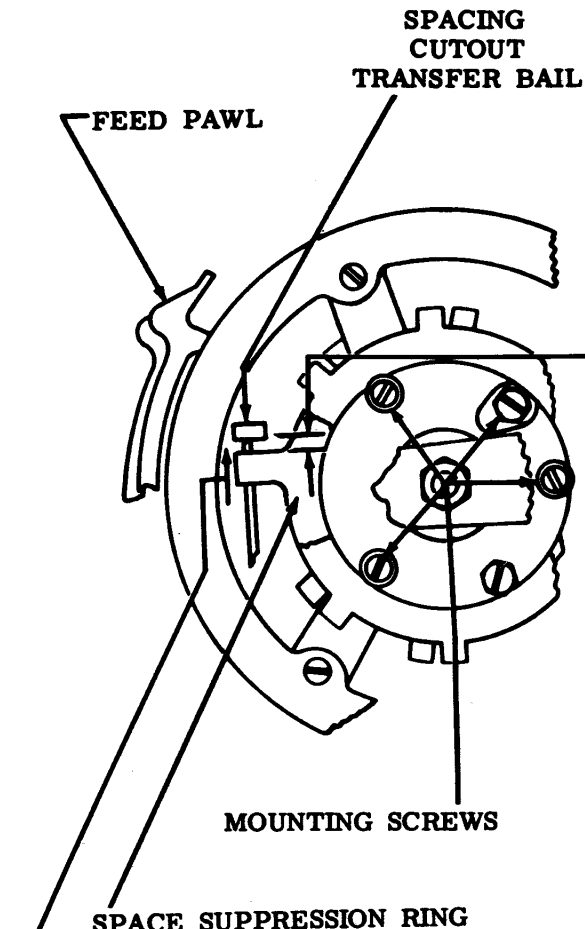

RIGHT MARGIN

Requirement
Typebox clutch disengaged. Carriage in position to print character on which spacing cutout is to occur. Front feed pawl farthest advanced. Spacing cutout transfer bail held in its uppermost position. On units having two piece spacing cutout bail, push the cutout bail towards rear of unit through hole in front plate. Clearance between extension on space suppression ring and transfer bail
Min 0.006 inch---Max 0.025 inch

To Adjust
Position space suppression ring with four indicated mounting screws loosened.

Note 2: Range of adjustment is from 0 to 85 characters on units with ring-type cutout arm. (Printers used in Bell System switched network services should be adjusted to 72 characters.)

Note 3: On units equipped with automatic carriage return-line feed ring, this adjustment is not applicable.

SPACING CUTOUT TRANSFER BAIL SPRING

Requirement
Min 1 oz---Max 3-1/2 oz
to start bail moving.

SPACE SUPPRESSION BYPASS SPRING (On Unit Equipped With Separate Cutout Lever and Spring)

Requirement
With typing unit upside down, hook a scale on the spacing cutout lever extension pawl next to the spring and pull towards the rear of the unit.
Min 20 oz---Max 26 oz
to start the pawl moving.

2.57 Printing Mechanism (continued)

TYPEBOX ALIGNMENT

Requirement

Printed impression of characters at top and at bottom should be equal (gauge visually).

To Adjust

Loosen nut. Operate printer under power. Repeat characters E and Z. Turn adjusting screw in or out (in steps of 1/4 turn) to meet requirement. Tighten nut.

Note: Check and refine PRINTING HAMMER STOP BRACKET (2.54) if necessary.

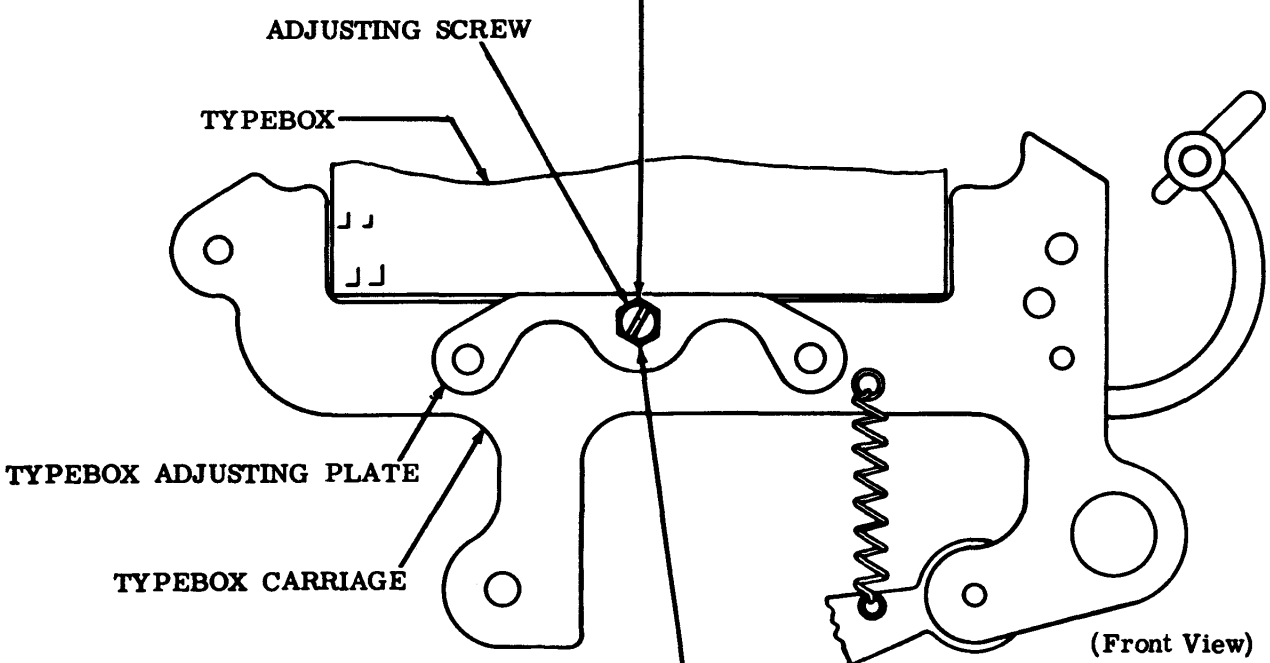

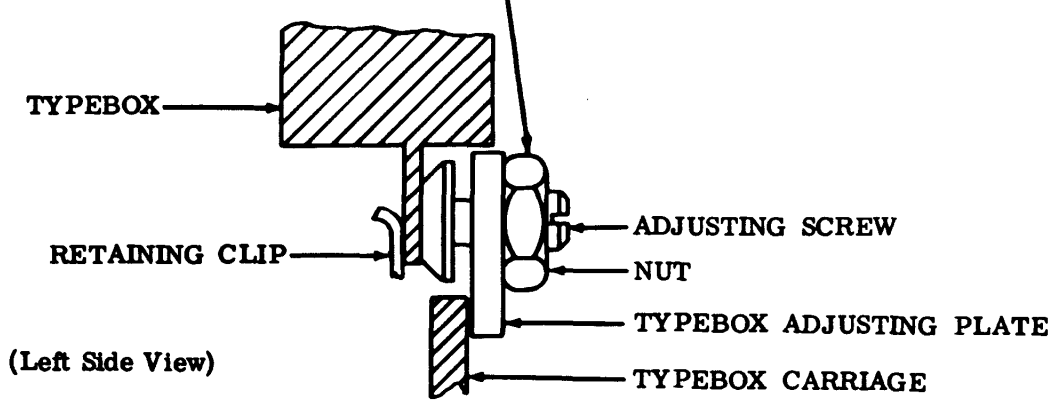

2.58 Printing Mechanism (continued)

(A) RIBBON REVERSE SPUR GEAR

Requirement

When right reversing lever is in max downward position, the left reversing lever should be in its max upward position.

To Adjust

Loosen the setscrews in the detent cam. Loosen the left spur gear nut. Securely tighten the right spur gear nut. Move the right reversing lever to its max upward position and hold the left reversing lever in its max downward position. Then tighten the left spur gear nut.

Note: Rotate typebox clutch 1/2 turn. Right reversing lever upward. Move right ribbon lever under right ribbon reversing lever. There should be some clearance between levers. Check left side same way. Refine adjustment if necessary.

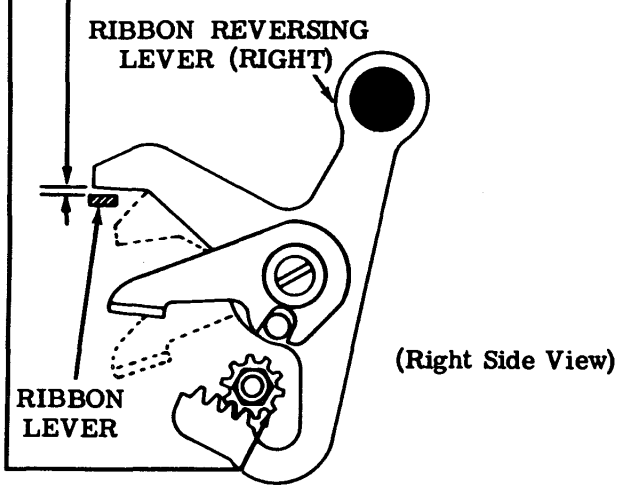

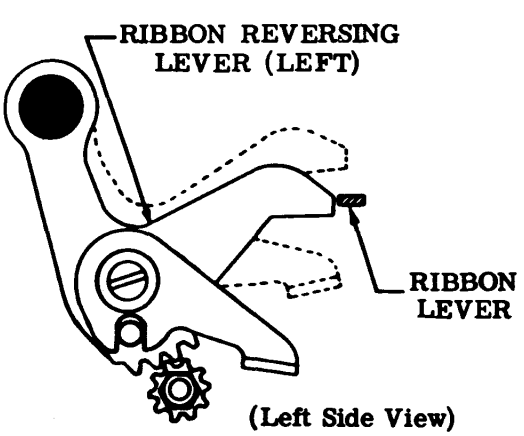

(B) RIBBON REVERSE DETENT

Requirement

Ribbon reverse detent link buckled in its downward position, clearance between detent link and detent lever

Min some---Max 0.055 inch

when play in the lever is taken up lightly toward the right side of the printer.

To Adjust

Hold left ribbon reversing lever in its downward position, position detent link, and tighten the upper setscrew in the hub of the detent link. Buckle the detent link upward and tighten lower setscrew.

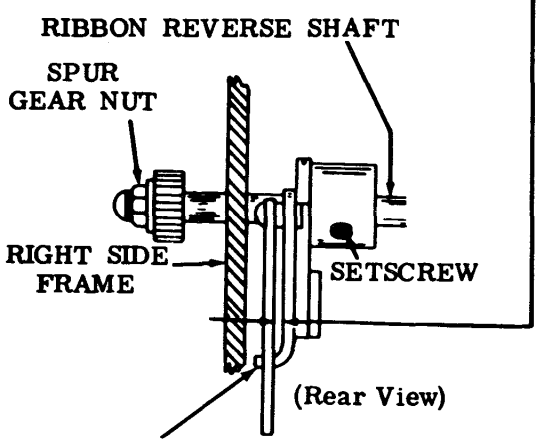

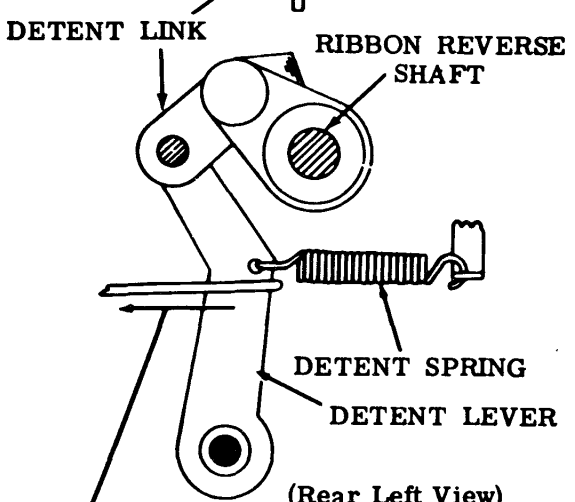

(C) RIBBON REVERSE DETENT LEVER SPRING

Requirement

Detent link buckled in upward position

Min 10 oz---Max 18 oz

to start detent lever moving toward rear.

2.59 Printing Mechanism (continued)

RIBBON FEED LEVER BRACKET

(1) Requirement (Left-Hand Mechanism)
Left reversing lever in upward position. Ribbon mechanism in upper position. Ratchet wheel held against the detent lever. Clearance between the front face of the feed lever and the shoulder of a tooth on the ratchet wheel
Min 0.015 inch---Max 0.035 inch

(2) Requirement (Right-Hand Mechanism)
Right reversing lever and ribbon mechanism in upward position. Adjust feed lever bracket in the same manner.

Note 1: Rotate the main shaft. The ratchet wheel should step one tooth only with each operation.

To Adjust
Position the feed lever bracket with its mounting screws loosened.

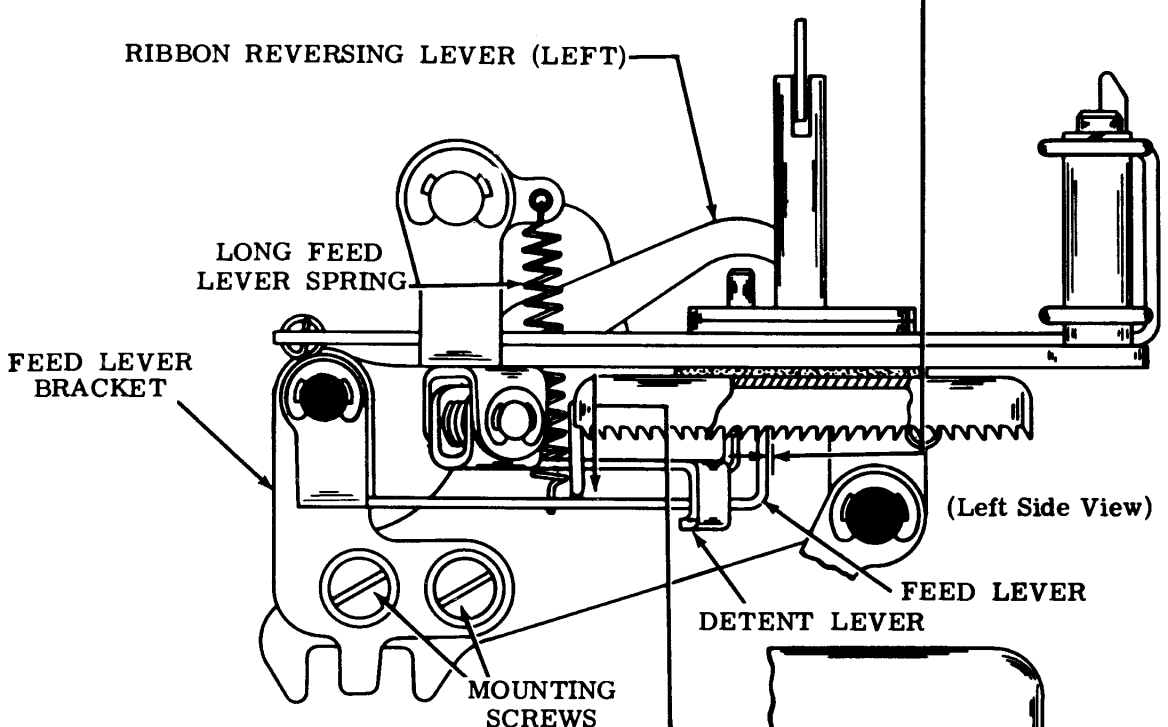

RIBBON FEED LEVER SPRING

Requirement
Ribbon feed levers in uppermost position.
For Long Lever: Push downward near its spring.
For Short Lever: Push downward at point near long lever spring.
Min 3/4 oz---Max 2 oz
to start feed levers moving. Measure all four levers.

Note 2: If minimum requirement of short lever is not met, pull lower end of torsion spring to rear.

RIBBON RATCHET WHEEL FRICTION SPRING

Requirement
Feed levers disengaged.
Min 3 oz---Max 7-1/2 oz
to start the ratchet wheel moving.

2.60 Printing Mechanism (continued)

RIBBON LEVER SPRING

Requirement
Min 1-1/2 oz---Max 3 oz
to start the lever moving. Check both
right and left springs.

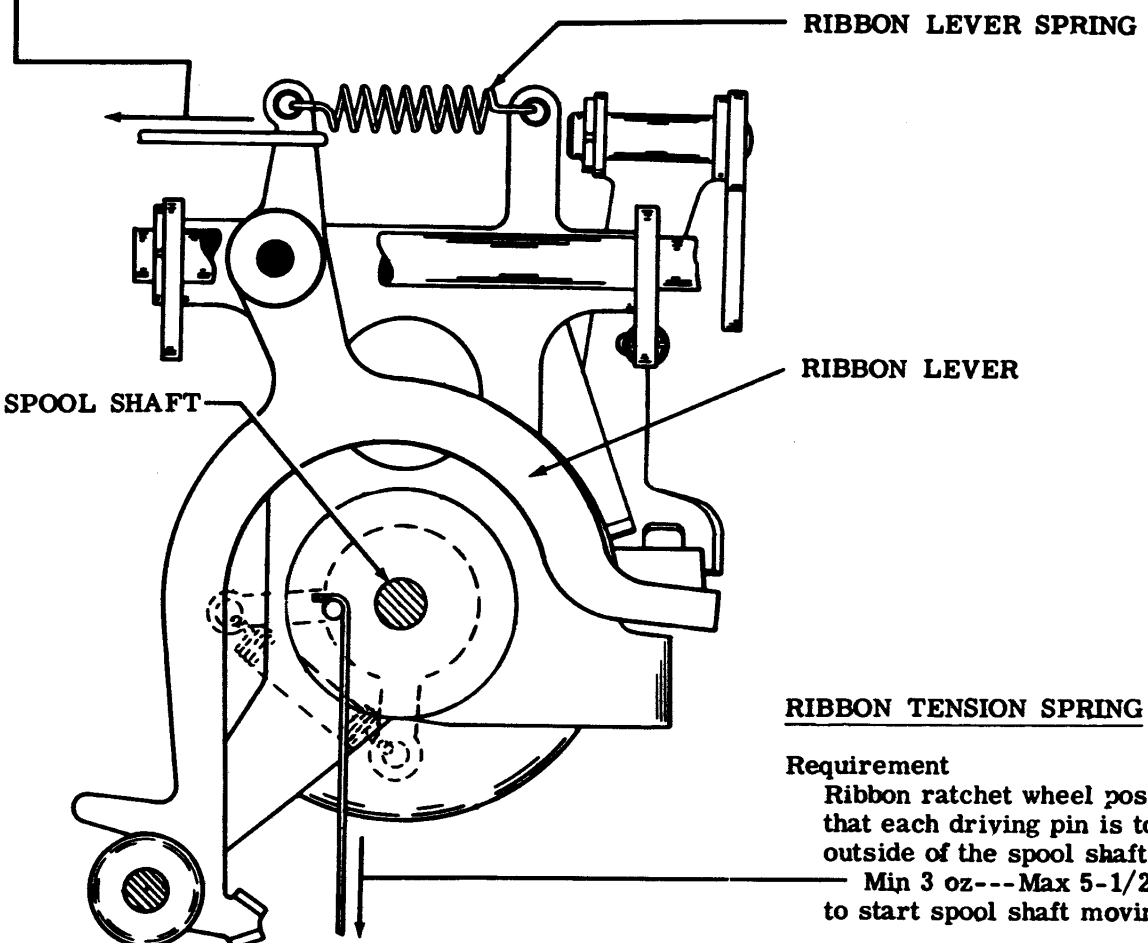

RIBBON TENSION SPRING

Requirement
Ribbon ratchet wheel positioned so
that each driving pin is toward the
outside of the spool shaft.
Min 3 oz---Max 5-1/2 oz
to start spool shaft moving.

(Top View)

2.61 Line Feed and Platen Mechanism (continued)

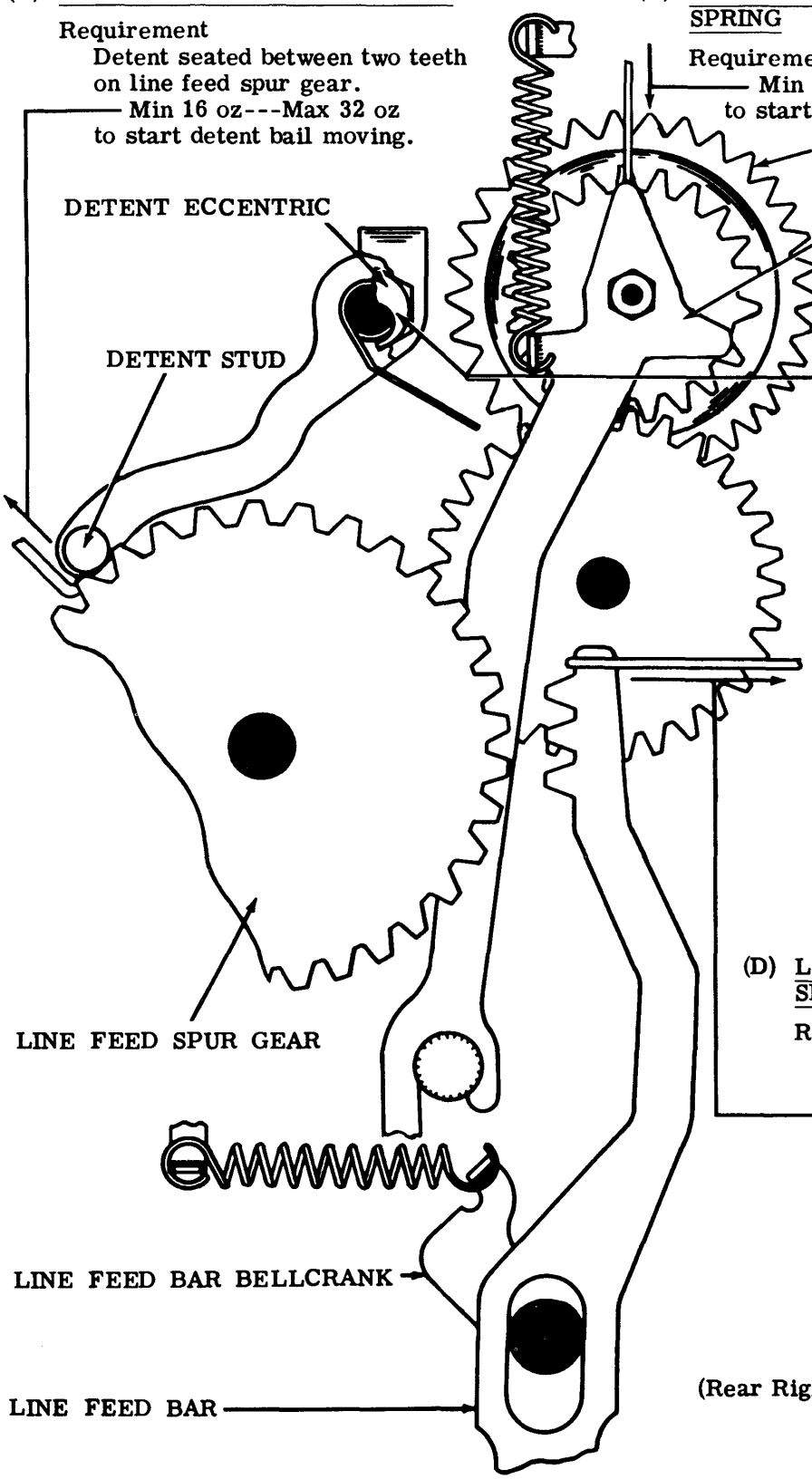

(B) PLATEN DETENT BAIL SPRING

Requirement
Detent seated between two teeth on line feed spur gear.
Min 16 oz---Max 32 oz to start detent bail moving.

(C) LINE FEED BAR RELEASE LEVER SPRING

Requirement
Min 3 oz---Max 8 oz to start lever moving.

(A) LINE FEED SPUR GEAR DETENT ECCENTRIC

Requirement
Line feed clutch disengaged. Platen rotated until detent stud is seated between two teeth on line feed spur gear. When hand wheel is released, manually set the teeth on the line feed bars into engagement with the teeth on the line feed spur gear. The detent stud should contact one gear tooth and be not more than 0.010 inch from other tooth.

To Adjust
Rotate the detent eccentric with its mounting screw loosened. Keep high part of eccentric upward.

(D) LINE FEED BAR BELLCRANK SPRING (FRICTION FEED)

Requirement
Left-hand line feed bar in rear position
Min 19 oz---Max 24 oz to start bar moving.

2.62 Line Feed and Platen Mechanism (continued)

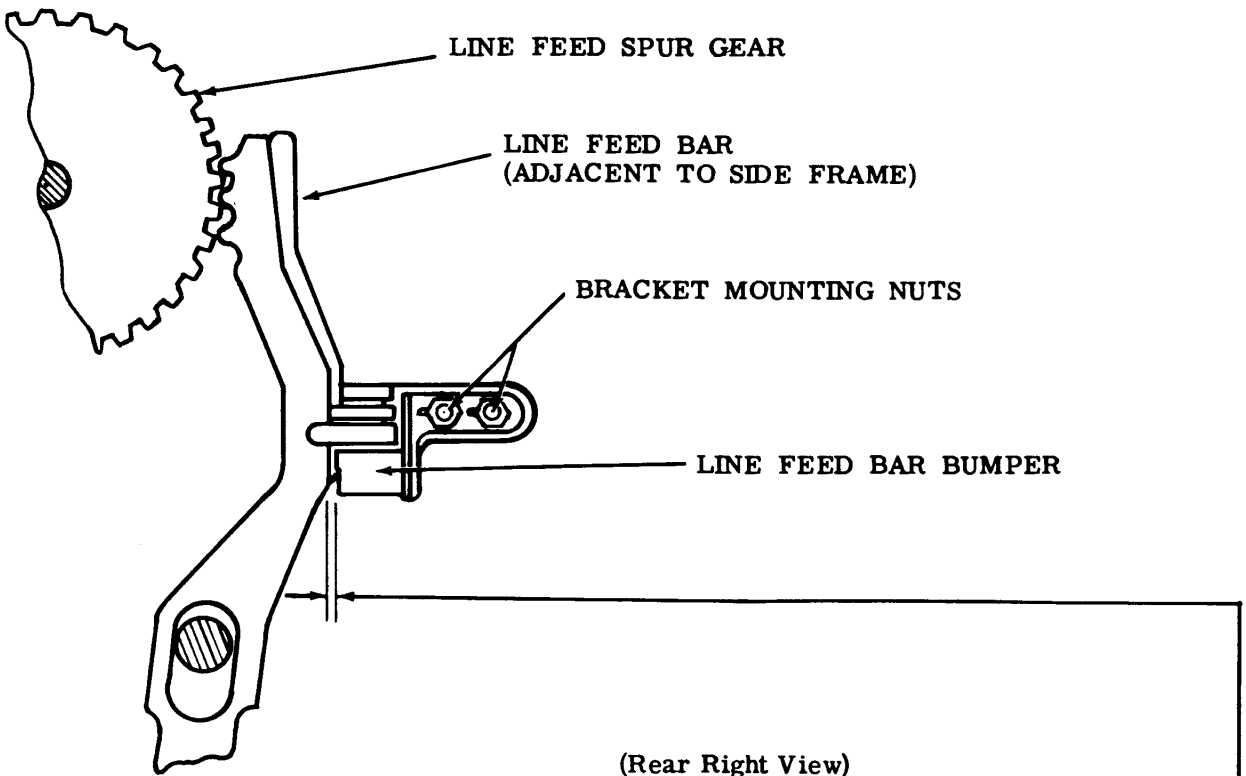

LINE FEED BAR BUMPER (SIX STOP CLUTCH ONLY)

Requirement

With the line feed clutch tripped manually, rotate the main shaft until the line feed bar adjacent to side frame is at its maximum travel away from the line feed spur.

Min 0.065 inch---Max 0.080 inch clearance between the other line feed bar and the line feed bar bumper.

To Adjust

Loosen the two bracket mounting nuts and position the bracket thru its elongated slots until proper clearance is obtained. Then tighten the two mounting nuts.

Note: Recheck vertical tab or form-out adjustment (variable features).

2.63 Function Mechanism (continued)

STRIPPER BLADE DRIVE CAM POSITION

Requirement
Stripper blade drive cam should move each stripper blade cam arm on equal distance above and below center line of its pivot (gauge by eye).
(a) Upward direction
(b) Downward direction

To Check
With function clutch disengaged observe engagement of stripper blade drive cam (upper peak) with stripper blade cam arm. Then rotate clutch to turn cam to its extreme downward position and observe engagement of lower cam peak.

To Adjust
With stripper blade drive arm mounting screws loosened. Equalize the overtravel of each cam peak.

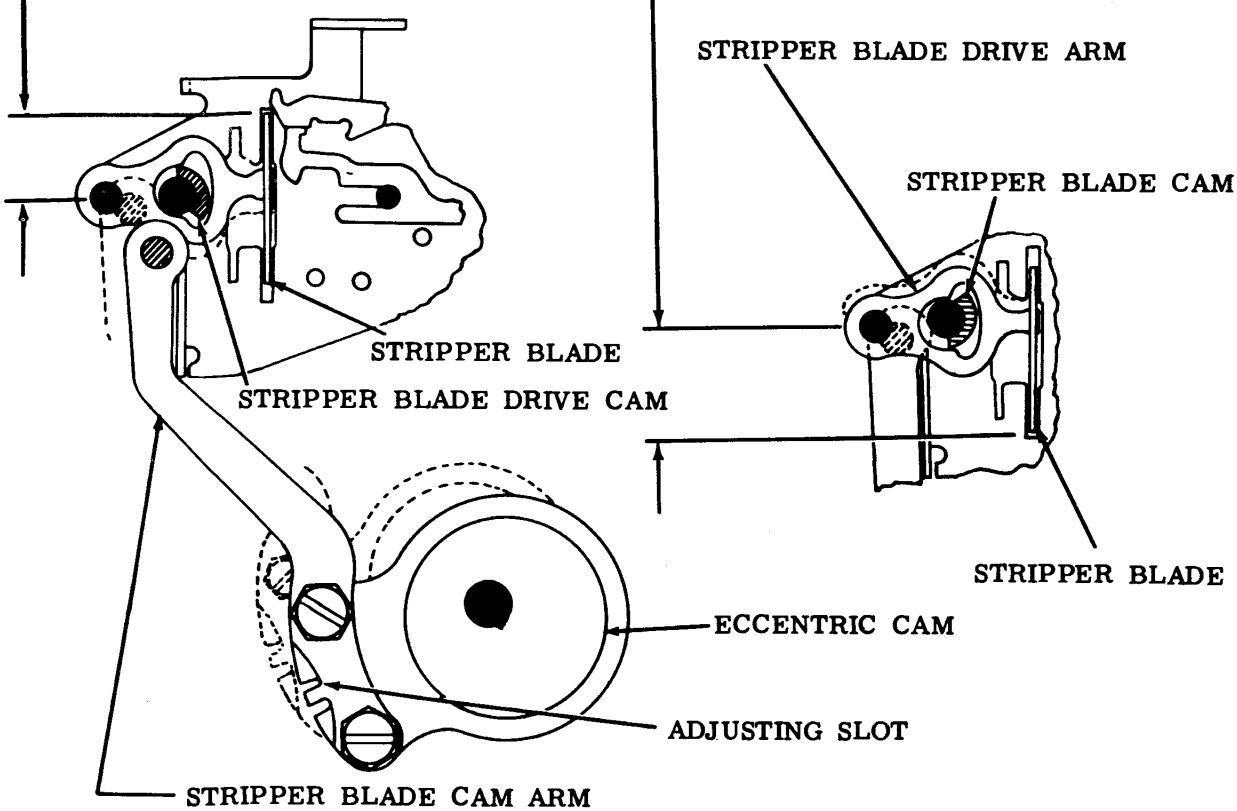

(Rear View)

2.64 Function Mechanism (continued)

(A) FUNCTION LEVER SPRING

Note: If a function lever operates a contact or a slide, hold off the contact or slide when checking the spring.

Requirement
Function lever in unoperated position. Suppression bail held forward.
Min 1-1/2 oz---Max 2-3/4 oz
to start function lever moving. Check each spring.

(B) FUNCTION PAWL SPRING

Requirement
Rear end of function pawl resting on function bar
Min 3 oz---Max 5 oz
to start pawl moving. Check each spring.

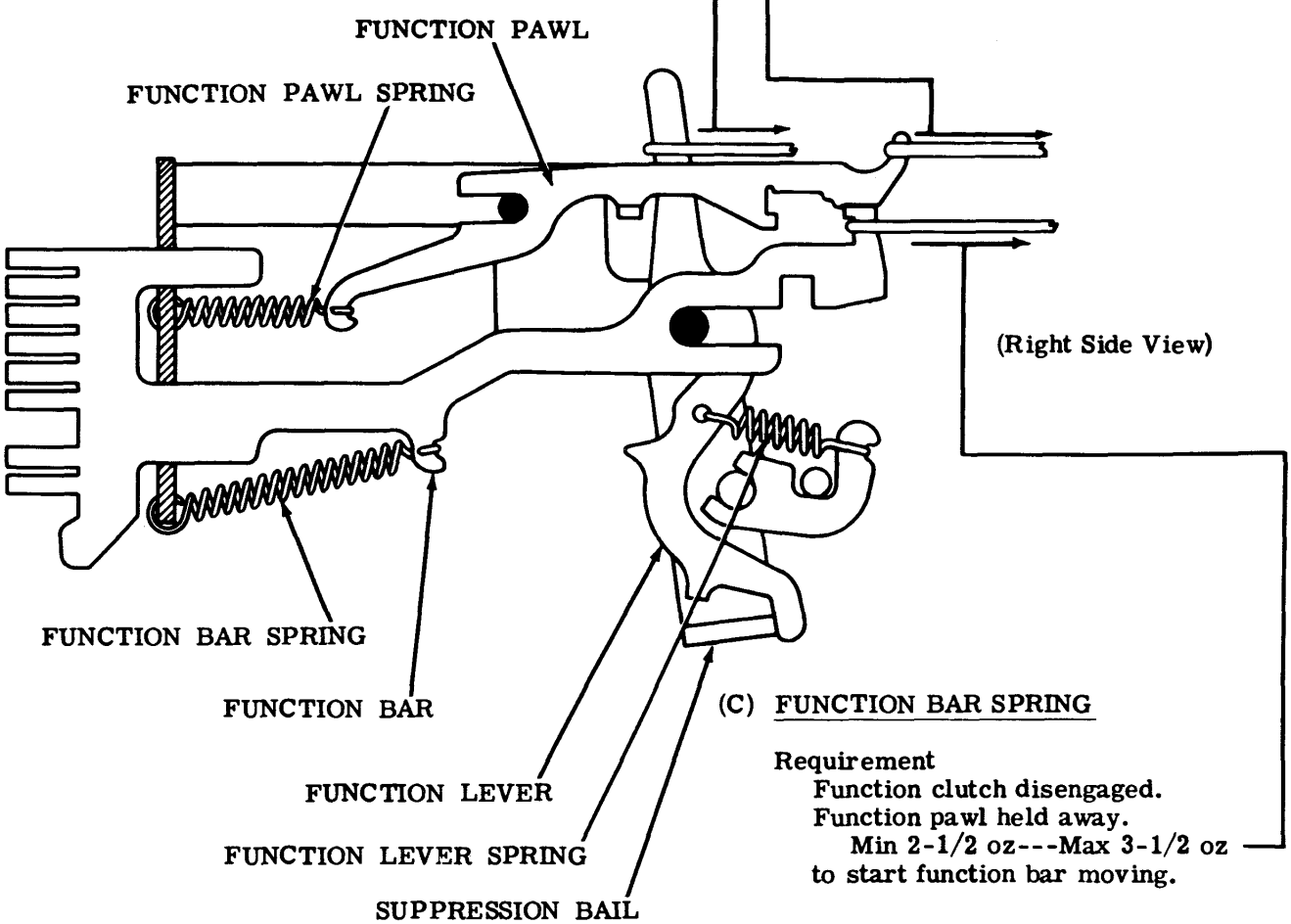

(C) FUNCTION BAR SPRING

Requirement
Function clutch disengaged.
Function pawl held away.
Min 2-1/2 oz---Max 3-1/2 oz
to start function bar moving.

CAUTION: SEVERE WEAR TO THE POINT OF OPERATION FAILURE WILL RESULT IF THE TELETYPEWRITER IS OPERATED WITHOUT EACH FUNCTION PAWL HAVING EITHER A RELATED FUNCTION BAR OR, WHERE A FUNCTION BAR IS MISSING, A RELATED FUNCTION PAWL CLIP TO HOLD THE FUNCTION PAWL AWAY FROM THE STRIPPER BLADE.

2.65 Function Mechanism (continued)

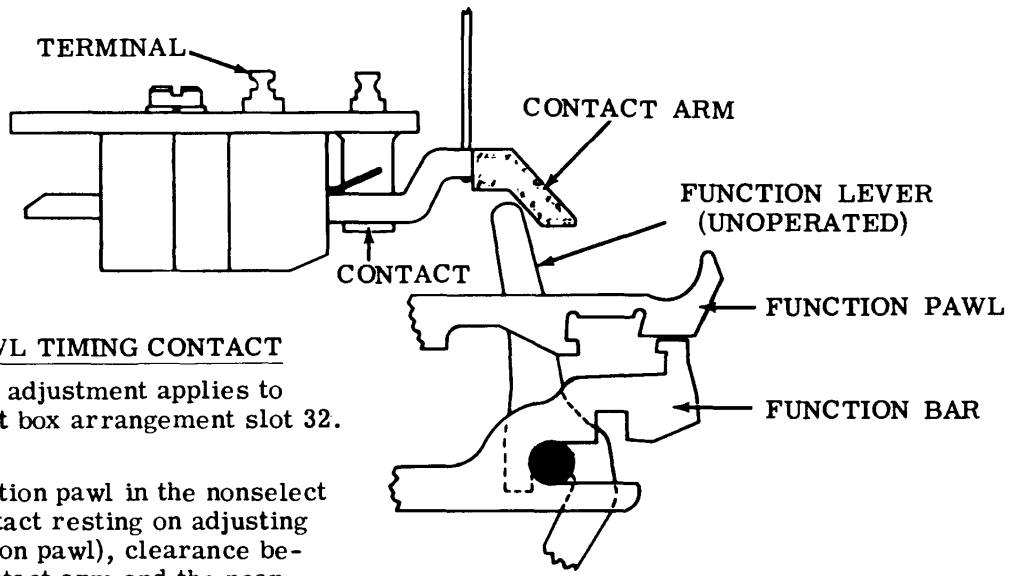

(Right Side View)

FUNCTION PAWL TIMING CONTACT

Note 1: This adjustment applies to the ATX stunt box arrangement slot 32.

Requirement

With the function pawl in the nonselect position (contact resting on adjusting stud of function pawl), clearance between the contact arm and the near contact should be

Min 0.005 inch---Max 0.015 inch

To Adjust

Position adjusting stud by means of its mounting screw.

FUNCTION CONTACT SPRING

Requirement

Contact closed

Min 1 oz---Max 2 oz to open switch contact.

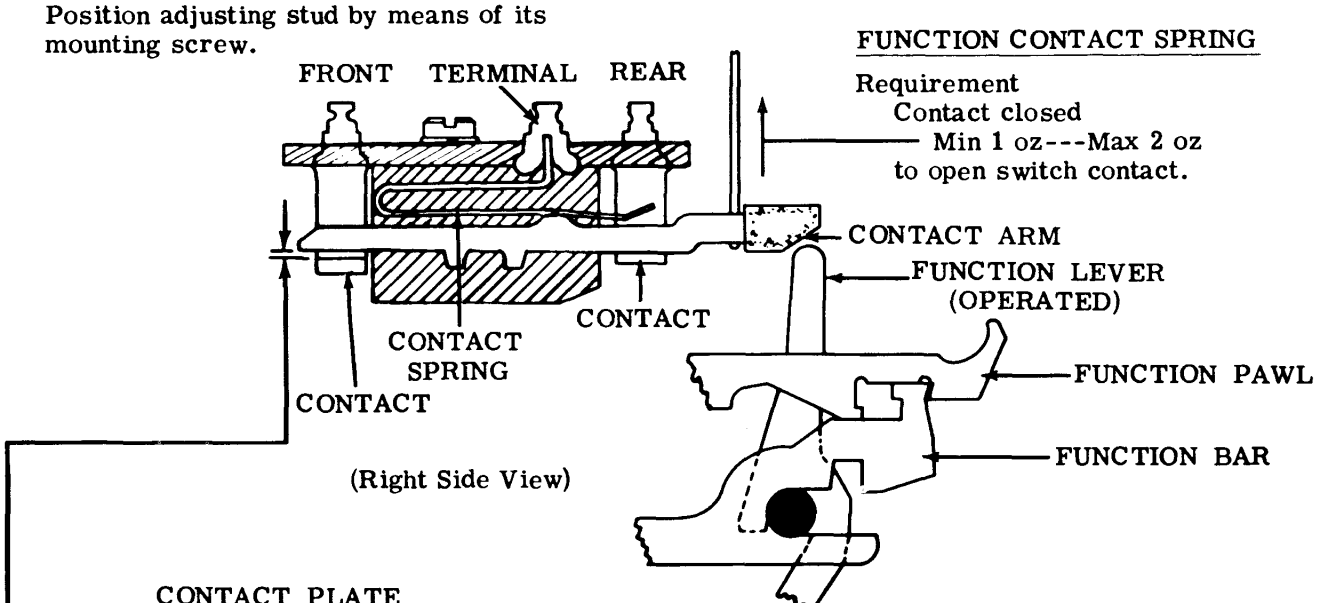

(Right Side View)

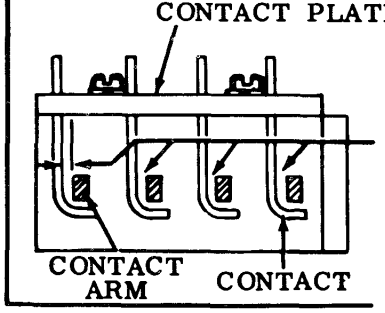

(Rear View)

Note 2: If the switches are removed from the stunt box, the following requirements apply.

Provide at least 0.006 inch clearance between the contact arm and the vertical portion of the contact clip. If the switch has contacts front and rear, this clearance applies to both front and rear. To obtain this clearance, position the contact plate before tightening the contact plate screws.

On switches with contacts front and rear, check to see that there is a gap of not less than 0.008 inch between the formed-over end of the front contact clip and the bottom of the contact arm when the rear contact is closed.

2.66 Spacing Mechanism (continued)

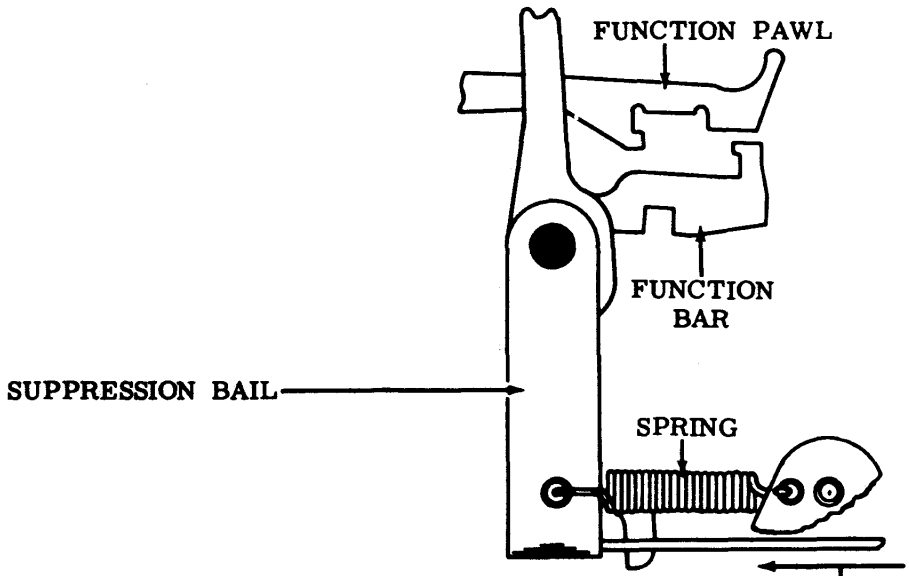

(Right Side View)

SPACING SUPPRESSION BAIL SPRING

Requirement
Spacing suppression bail in rear position. Scale applied near center of horizontal portion of bail.
Min 1/2 oz---Max 1-1/2 oz
to start bail moving.

2.67 Line Feed and Platen Mechanism (continued)

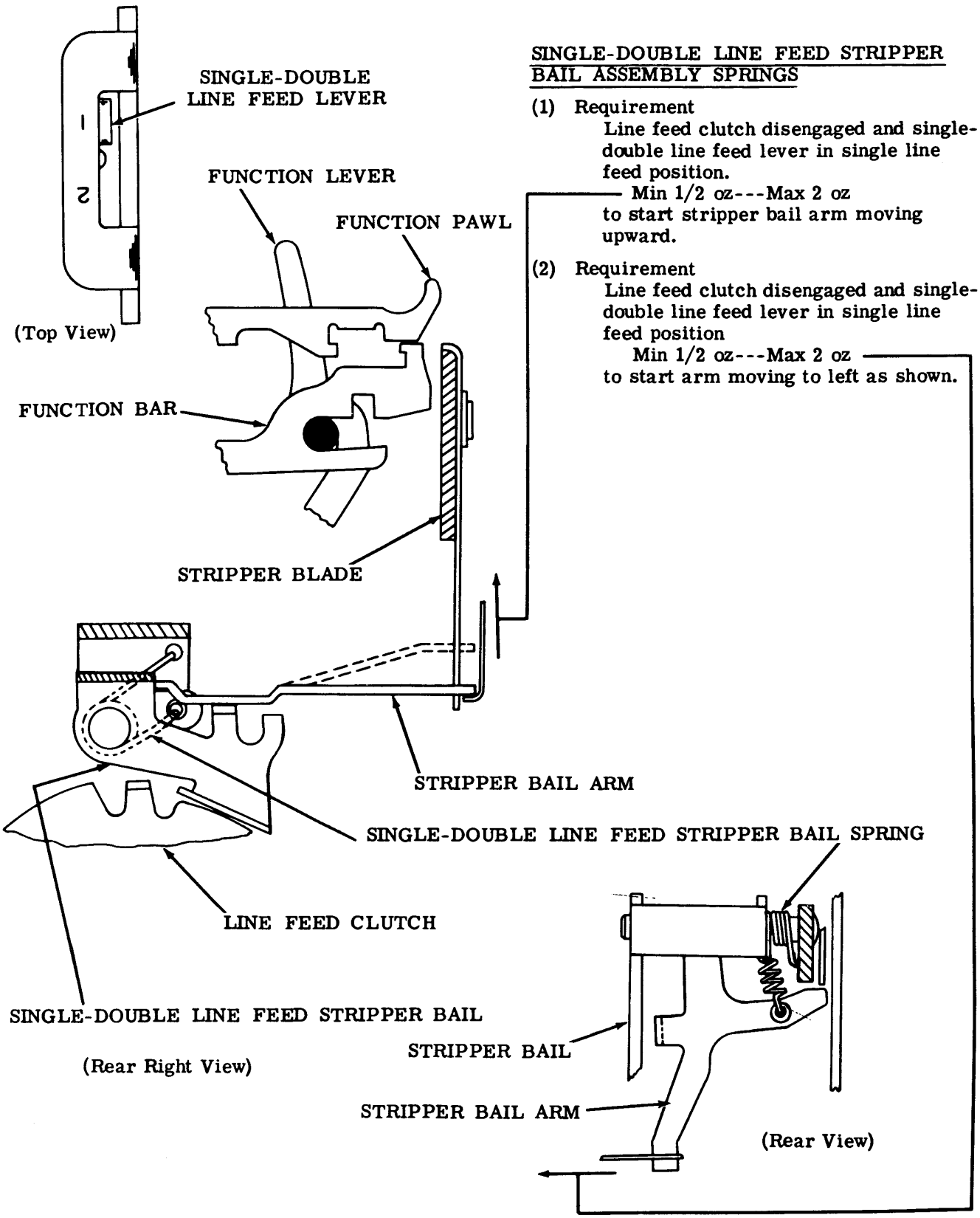

SINGLE-DOUBLE LINE FEED STRIPPER BAIL ASSEMBLY SPRINGS

(1) Requirement
Line feed clutch disengaged and single-double line feed lever in single line feed position.
Min 1/2 oz---Max 2 oz
to start stripper bail arm moving upward.

(2) Requirement
Line feed clutch disengaged and single-double line feed lever in single line feed position
Min 1/2 oz---Max 2 oz
to start arm moving to left as shown.

2.68 Line Feed and Platen Mechanism (continued)

RIGHT MARGIN WITH AUTOMATIC CARRIAGE RETURN-LINE FEED RING

Requirement (On Units So Equipped)
Typebox clutch disengaged. Carriage positioned two spaces before character on which automatic carriage return-line feed is to occur. Front feed pawl farthest advanced. Clearance between extension on ring and automatic carriage return-line feed bellcrank
Min 0.040 inch---Max 0.055 inch

To Adjust
Position ring with four indicated mounting screws loosened.

Note: Range of line adjustment is from 0 to 85 characters.

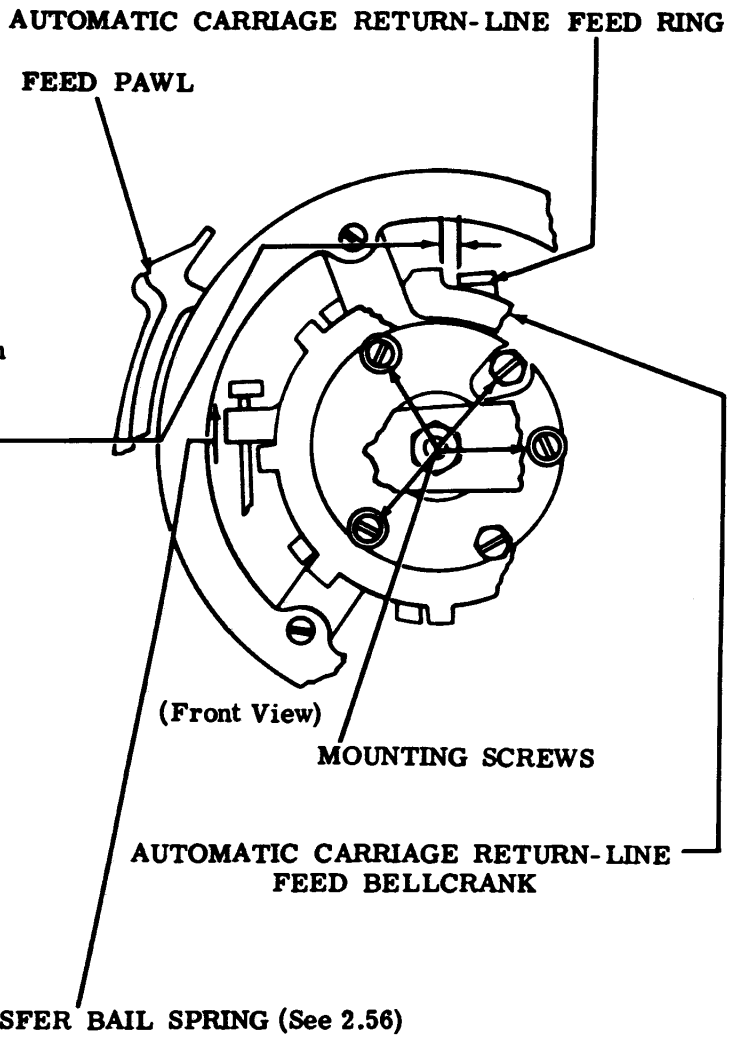

2.69 Positioning Mechanism (continued)

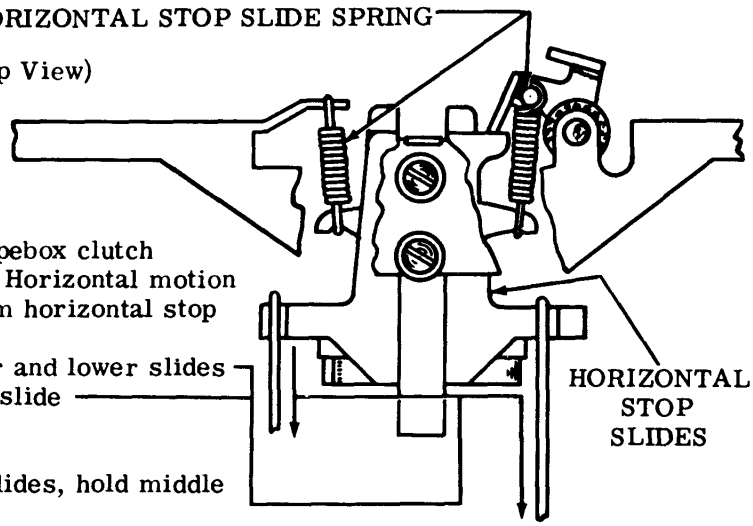

HORIZONTAL STOP SLIDE SPRING

Requirement
Codebars in marking position (left). Typebox clutch rotated 1/4 turn from its stop position. Horizontal motion decelerating slides (2.40) held away from horizontal stop slides.
Min 1/2 oz---Max 1-1/2 oz for upper and lower slides
Min 1-3/4 oz---Max 3 oz for middle slide
to start slide moving.

Note: When checking upper and lower slides, hold middle slide 1/32 inch forward.

2.70 Line Feed and Platen Mechanism (continued)

PAPER STRAIGHTENER LEVER SPRING (FRICTION FEED)

Requirement (Left and Right Springs)
Min 1-1/2 oz---Max 4 oz
to start the lever moving.

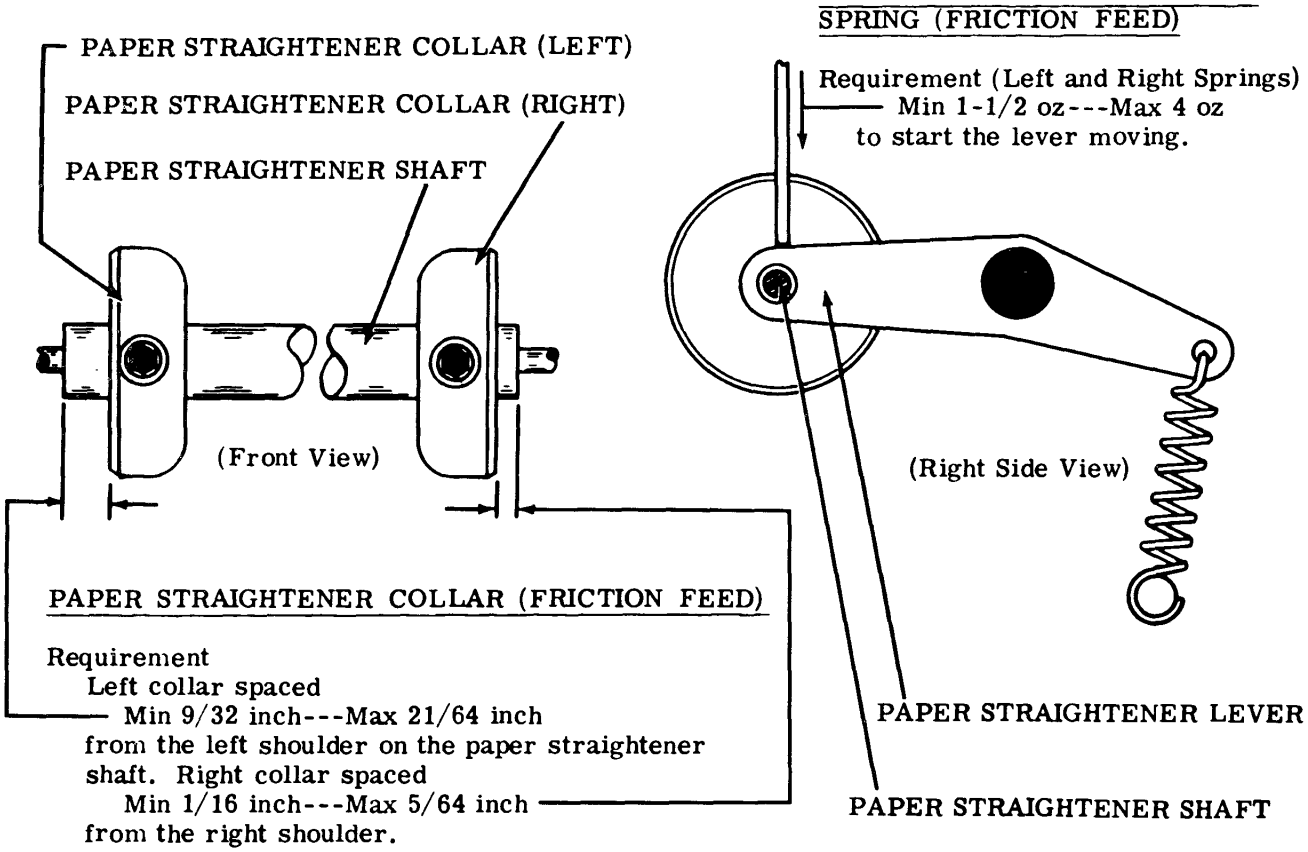

PAPER STRAIGHTENER COLLAR (FRICTION FEED)

Requirement
Left collar spaced
Min 9/32 inch---Max 21/64 inch
from the left shoulder on the paper straightener shaft. Right collar spaced
Min 1/16 inch---Max 5/64 inch
from the right shoulder.

To Adjust
Position collars on shaft with setscrews loosened.

Note: For sprocket feed mechanism, see 2.76.

2.71 Line Feed and Platen Mechanism (continued)

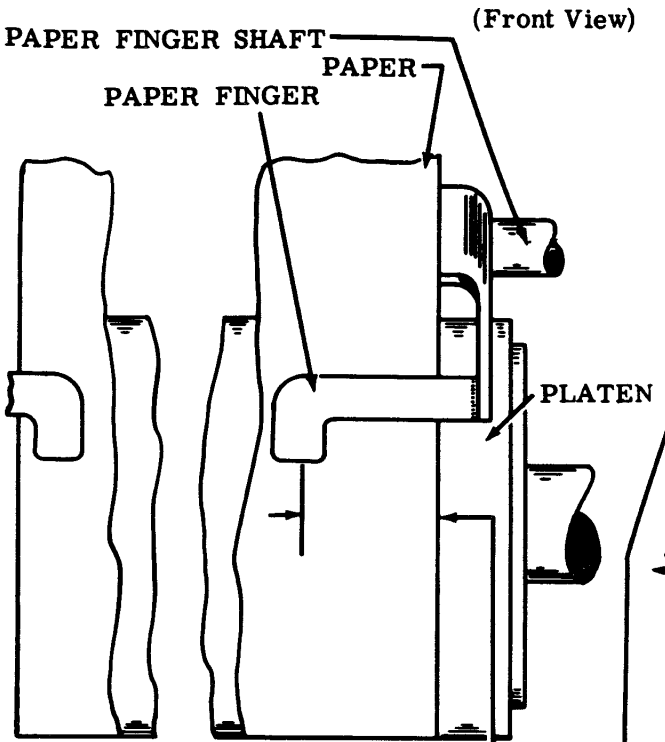

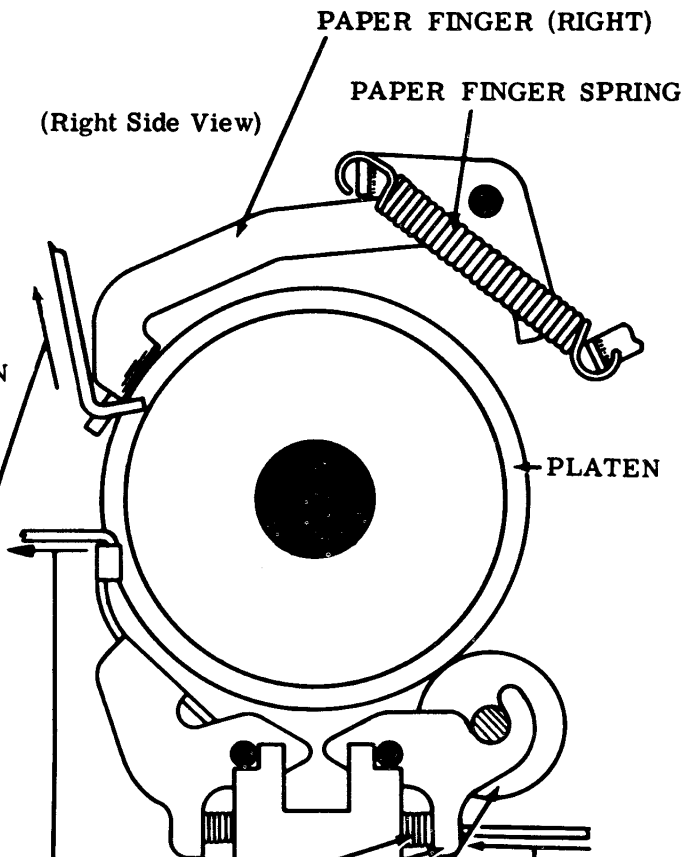

PAPER FINGER (FRICTION FEED)

Requirement
The pressure end of the paper fingers should overlap the paper from 3/8 inch to 1/2 inch.

To Adjust
Position the paper fingers by sliding them on their shaft.

PAPER FINGER SPRING (FRICTION FEED)

Requirement
Pull upward on right paper finger to start left paper finger moving from platen.
Min 3 oz---Max 6 oz

Note: For sprocket feed mechanism, see 2.80.

PRESSURE ROLLER LEVER SPRING (FRICTION FEED)

Requirement
Min 28 oz---Max 36 oz
to start each center lever moving alternately.

PAPER PRESSURE BAIL SPRING (FRICTION FEED)

Requirement
Scale hooked over pressure bail at each end of platen.
Min 7 oz---Max 20 oz
to move pressure bail from platen.

2.72 Codebar Mechanism (continued)

CODEBAR DETENT

Requirement
Front plate removed. All clutches disengaged. Suppression and shift codebars should detent equally (gauged by eye).

To Adjust
Equalize the detenting of the codebars by adding or removing shims between the casting and the codebar bracket.

CODEBAR DETENT SPRING

Note: Unless there is reason to believe that these springs are causing operating failure, do not check this requirement.

Requirement
Codebar detent bracket carefully removed and codebars removed from detent bracket. Scale applied to detent ball and pulled in direction of ball travel
Min 1-1/2 oz---Max 3-1/2 oz
(For applicable units the no. 6 codebar
Min 4 oz---Max 6 oz)
to start ball moving against compression of spring. Check each ball.

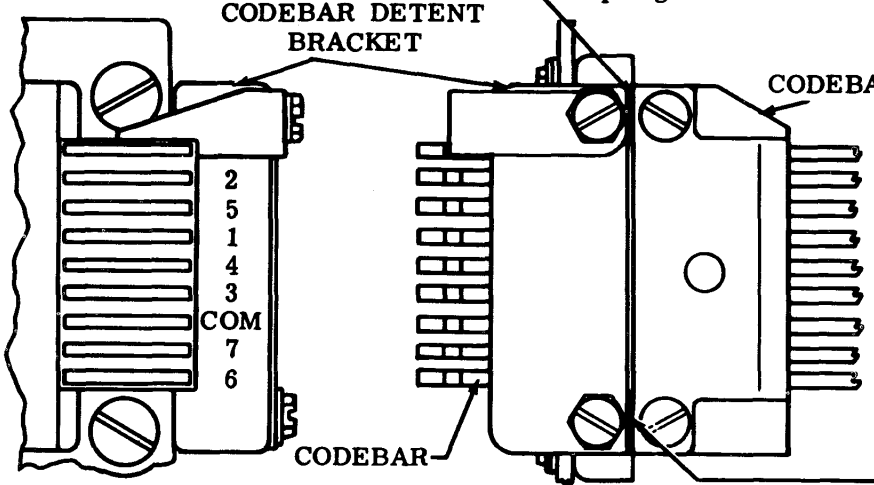

(Left Side View)

(Front View)

Note: When removing the detent assembly from the codebar bracket, be careful to maintain the correct number of shims at the upper and lower mounting screws.

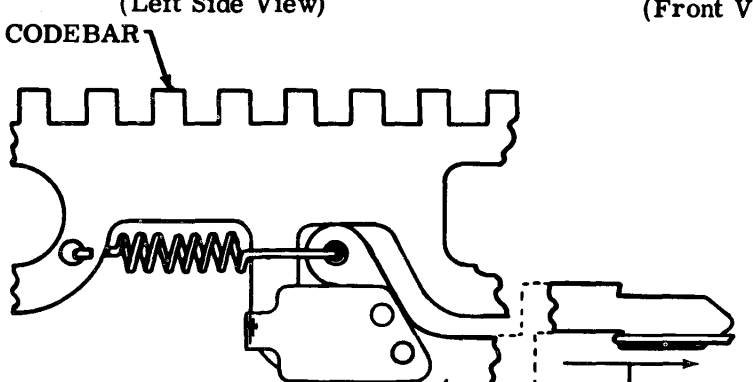

(Top Front View)

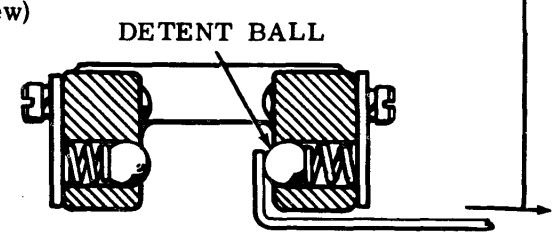

(Top Cross Section)

CODEBAR YIELD SPRING

Requirement
Selector clutch, codebar clutch, and typebox clutch disengaged. No. 1 codebar in spacing position
Min 14 oz---Max 23 oz
to start codebar shift bar pivot moving away from codebar. Check no. 2 and common codebar shift bar in the same manner.

2.73 Spacing Mechanism (continued)

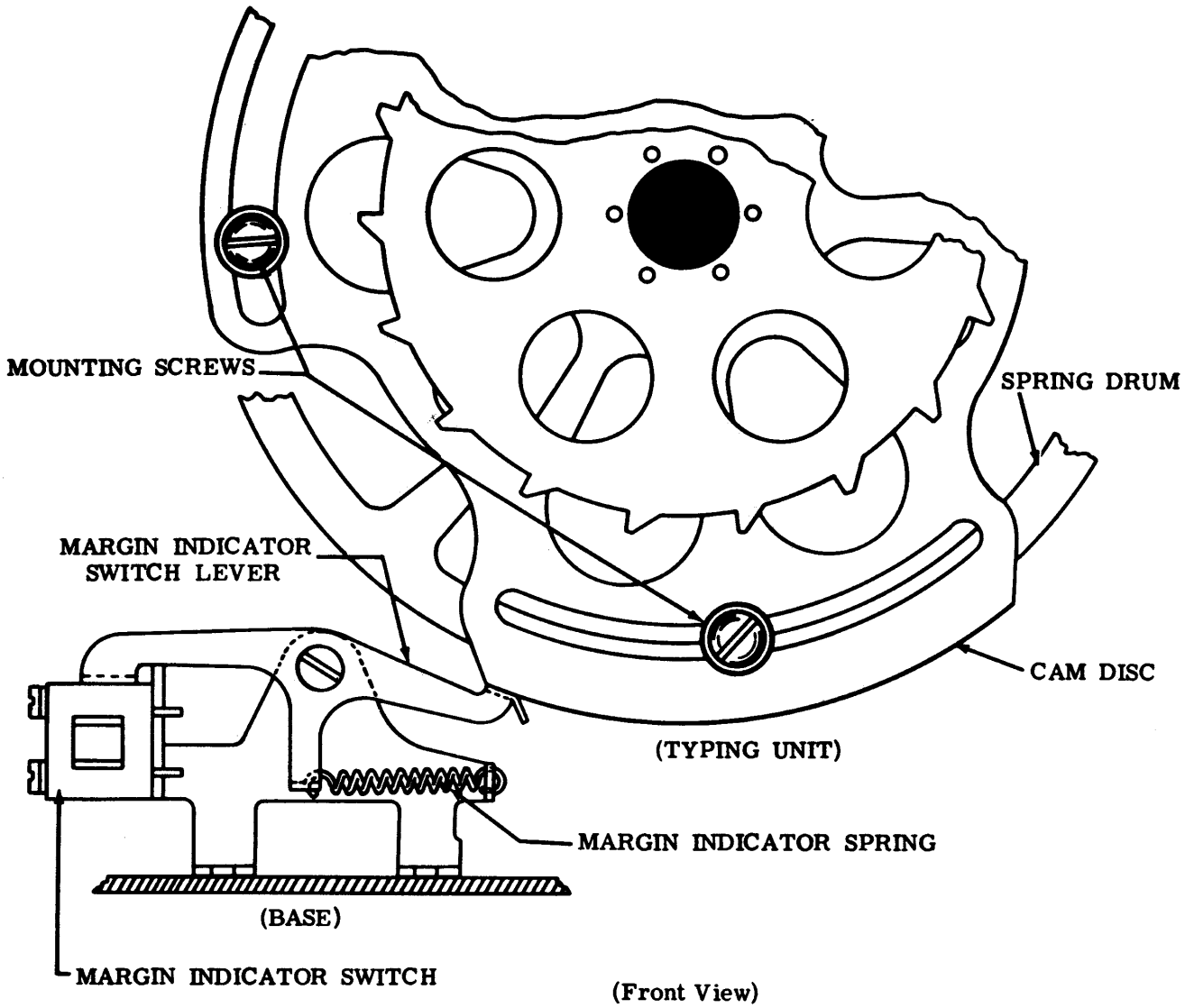

MARGIN INDICATOR LAMP

Requirement

Operating under power, the lamp should light on the desired character.

To Adjust

Set the typebox carriage to print the desired character and position the cam disc counterclockwise on the spring drum with its three mounting screws loosened so that the switch just opens. If a line shorter than 72 characters is required, it may be necessary to remove the cam disc screws and insert them in adjacent slots in the disc, if the range of rotation in one slot is not enough. Range is from the 5th through the 85th character.

(Min 65 characters---Max 69 characters in Bell System switched network service)

2.74 Printing Mechanism (continued)

(B) PRINT SUPPRESSION BLOCKING LEVERS

Requirement

No. 6 codebar marking. No. 7 and suppression codebars spacing. Clearance between blocking levers and blocking bail blade should be equal within 0.020 inch.

To Adjust

Position eccentric post, keeping high part of eccentric toward front of unit.

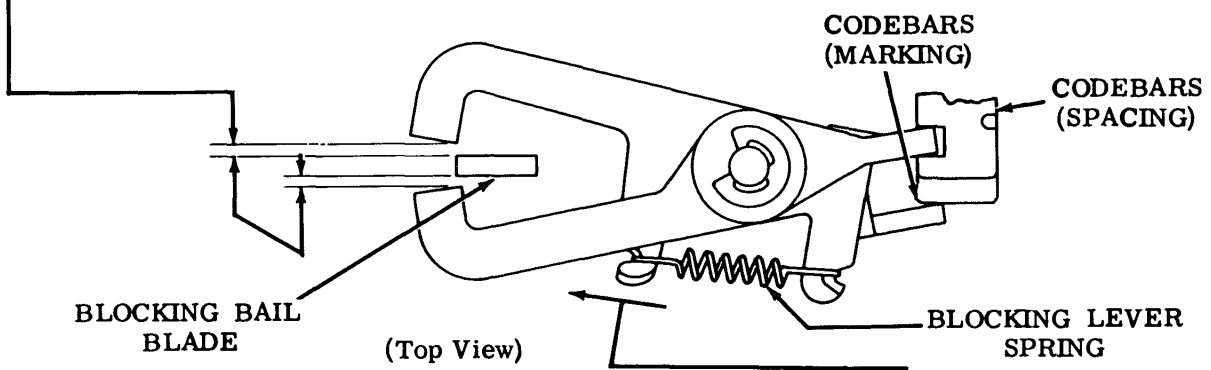

(C) PRINT SUPPRESSION BLOCKING LEVERS SPRING

Requirement

Codebars to right (spacing). Typebox clutch in stop position

Min 2-3/4 oz---Max 4 oz

to start lever moving.

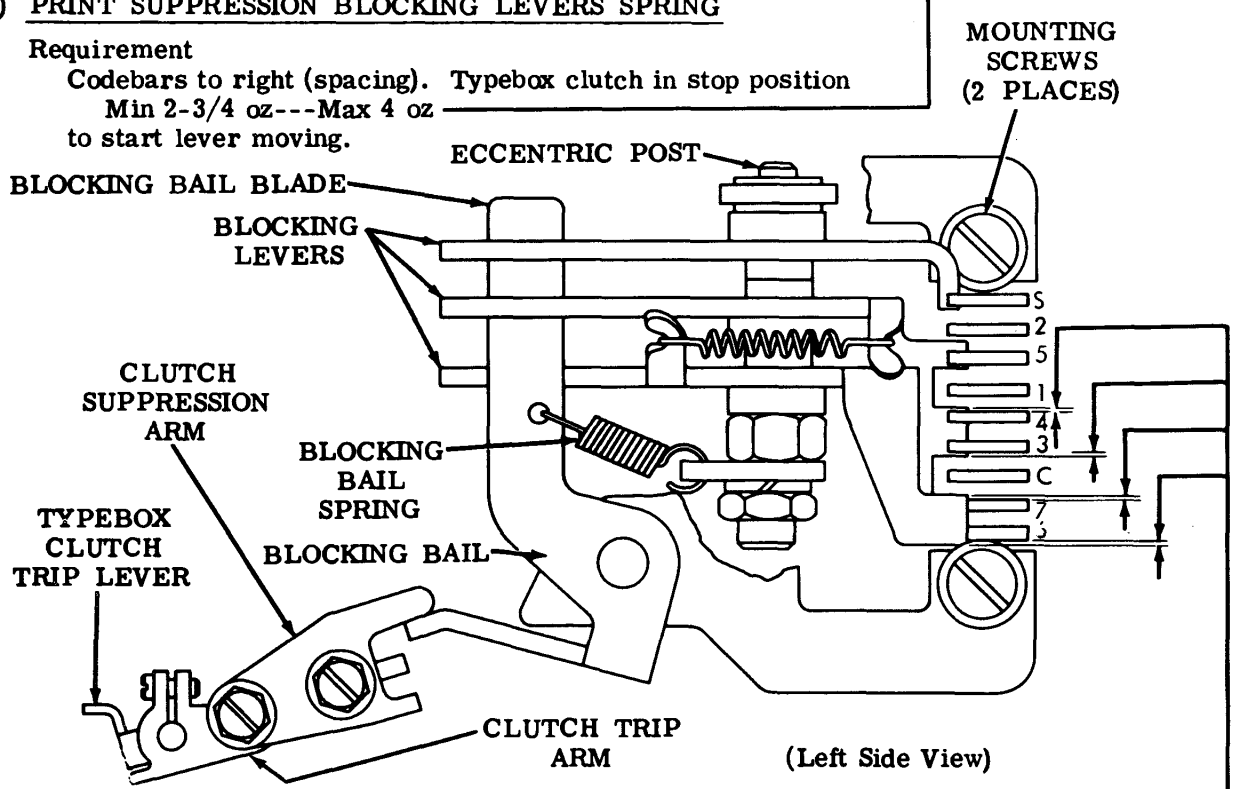

(A) PRINT SUPPRESSION MECHANISM

Requirement

Blocking lever extensions fully engaged by associated codebars.

To Adjust

Position print suppression assembly, with mounting screws friction tight, so lower lever extension is equally engaged by no. 6 and no. 7 codebars as gauged by eye.

2.75 Printing Mechanism (continued)

TYPEBOX CLUTCH SUPPRESSION ARM

Requirement
Blocking bail blocked. Rotate main shaft until function clutch shoe lever is opposite function clutch trip lever.
Min 0.003 inch
clearance between typebox clutch trip arm extension and clutch trip lever.
Min 0.006 inch
clearance between function clutch shoe lever and function clutch trip lever.

To Adjust
Position suppression arm with mounting screws friction tight.

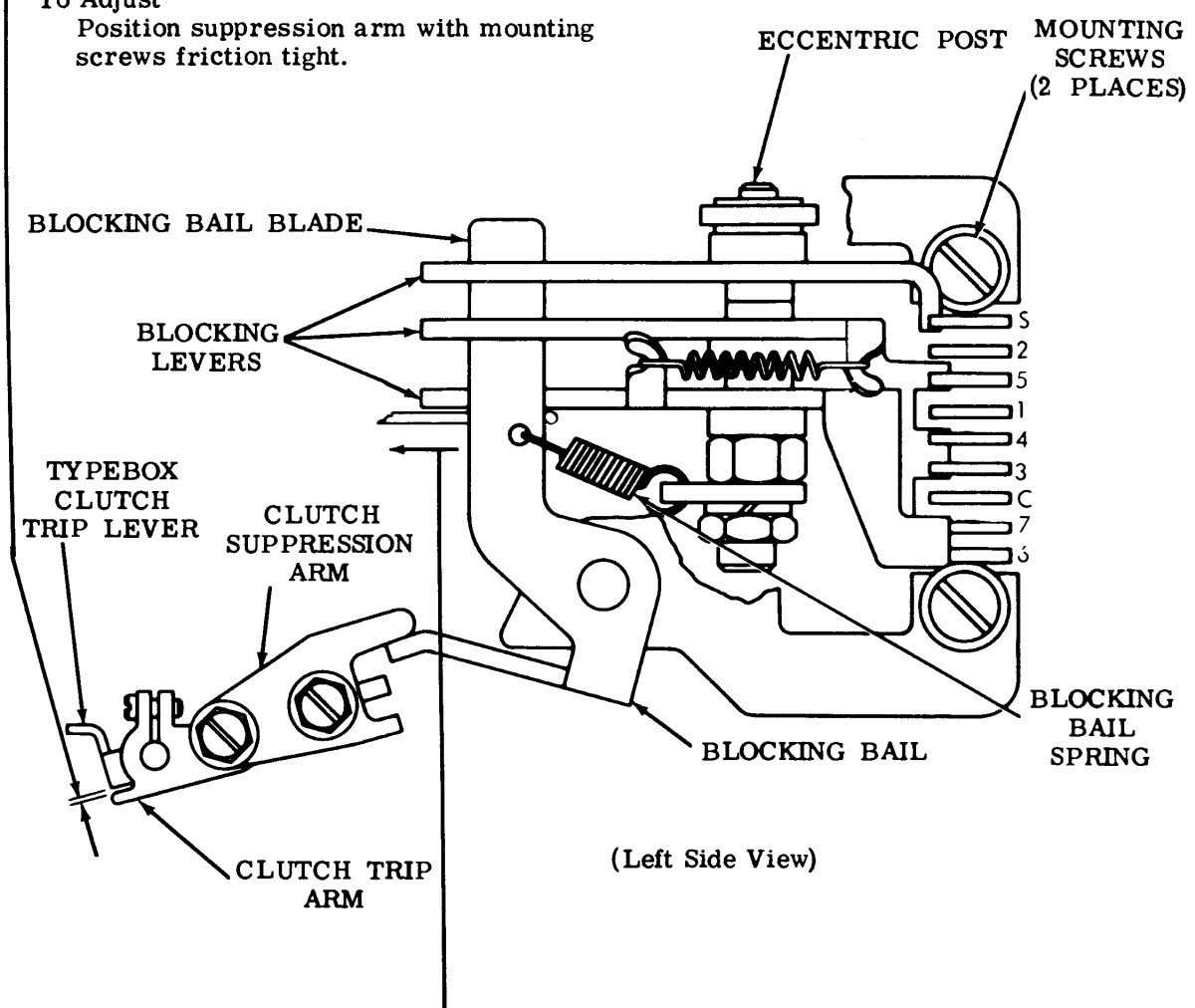

(Left Side View)

PRINT SUPPRESSION BLOCKING BAIL SPRING

Requirement
All codebars right (spacing). Typebox clutch in stop position
Min 1/2 oz---Max 1-1/2 oz
to start bail moving.

2.76 Line Feed and Platen Mechanism (continued)

(A) PAPER FINGER SHAFT SPRING (SPROCKET FEED)

Requirement
Hold latch away from shaft extension
Min 6 oz---Max 10 oz
to move paper finger against the platen.

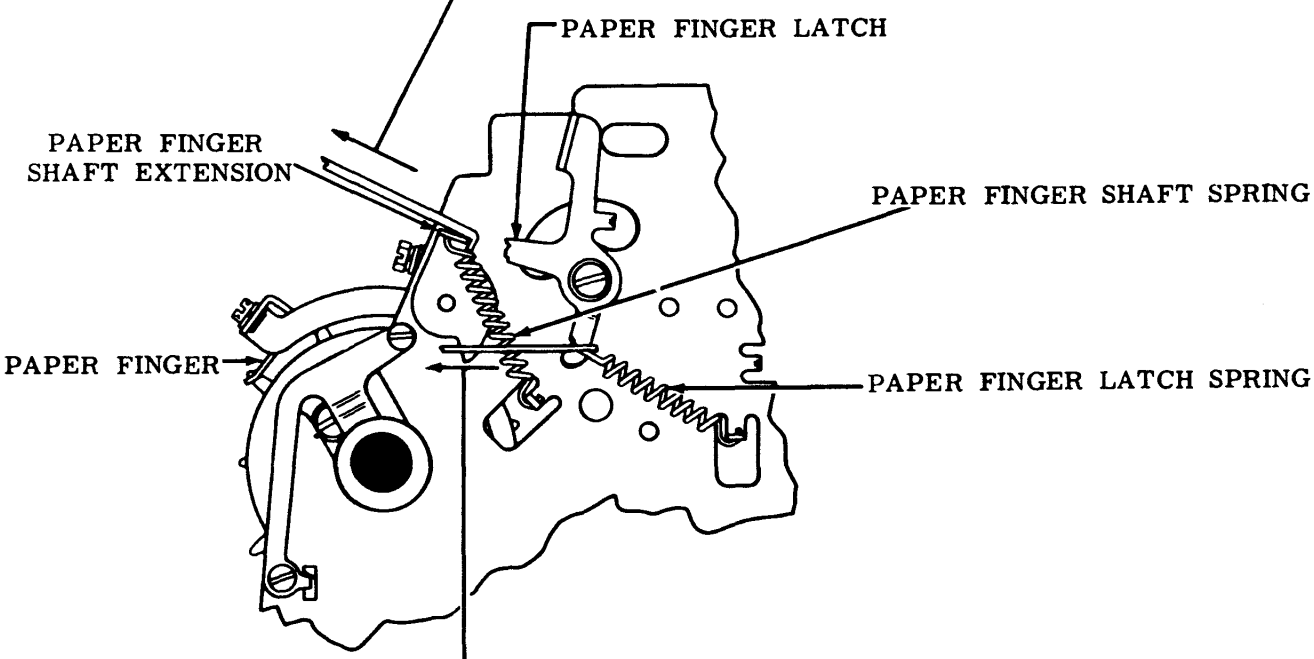

(Right Side View)

(B) PAPER FINGER LATCH SPRING (SPROCKET FEED)

Requirement
Hold paper finger against platen.
Min 8 oz---Max 12 oz
to start latch moving.

PLATEN DETENT BAIL SPRING

Use 2.61.

2.77 Positioning Mechanism (continued)

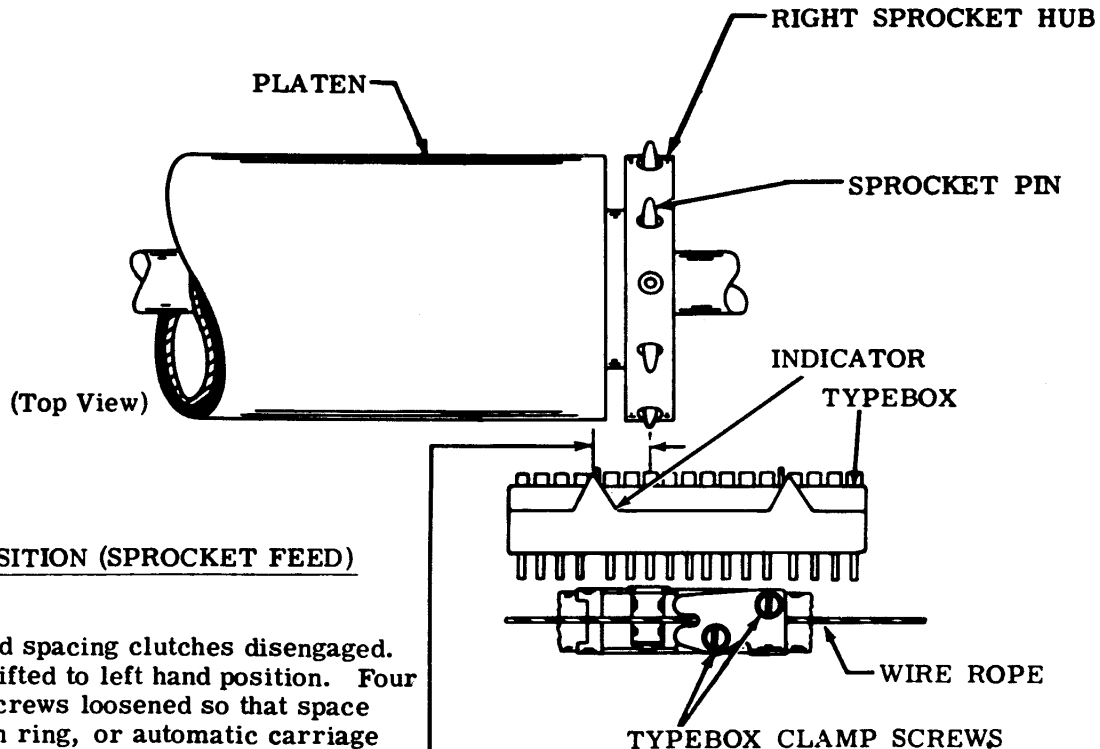

TYPEBOX POSITION (SPROCKET FEED)

Requirement

Typebox and spacing clutches disengaged. Typebox shifted to left hand position. Four mounting screws loosened so that space suppression ring, or automatic carriage return line feed ring, is free to rotate on drum. Clearance between left print indicator and center line of sprocket pins in right hub

Min 5/16 inch---Max 7/16 inch

To Adjust

Loosen two typebox clamp screws and two printing carriage clamp screws. Position typebox. Tighten typebox clamp screws. Leave printing carriage clamp screws friction tight until printing carriage position adjustment is made. Recheck related adjustment, CARRIAGE DRAW-WIRE ROPE (2.45).

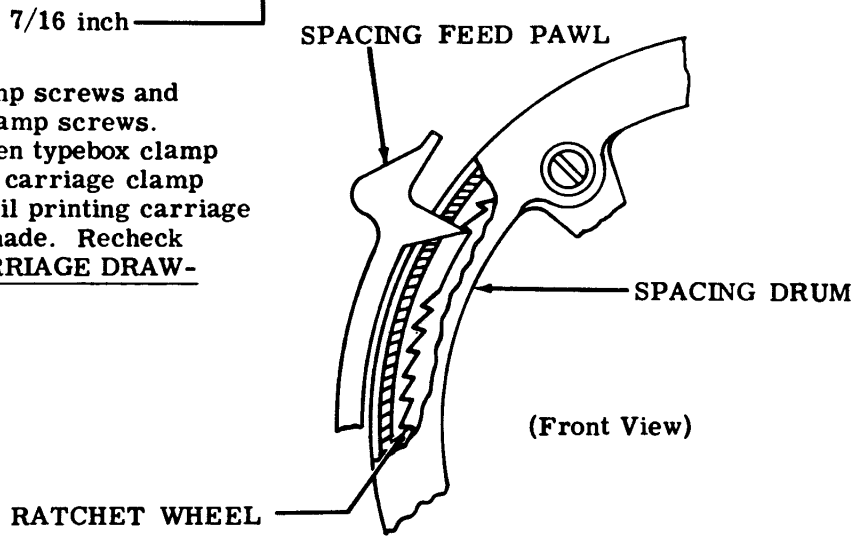

2.78 Line Feed and Platen Mechanism (continued)

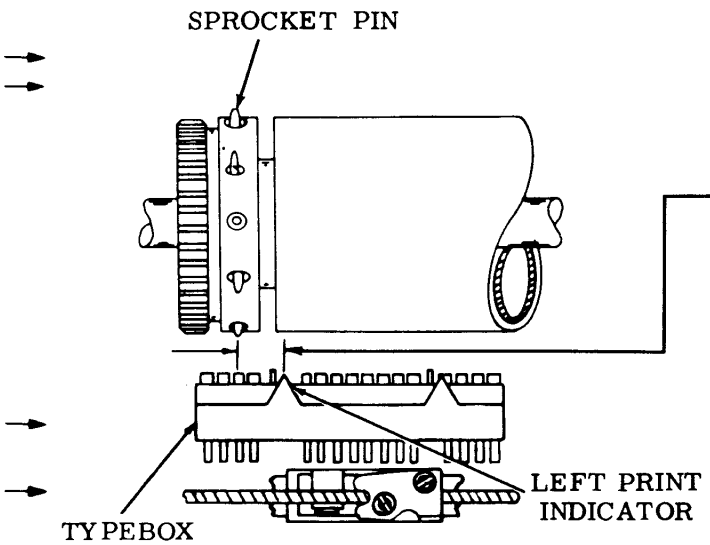

(Top View)

(A) LEFT MARGIN (SPROCKET FEED)

(1) Requirement
Typebox clutch disengaged. Spacing drum fully returned. Typebox shifted to left hand position. Clearance between center of left print indicator on typebox and center line of sprocket pins in left hub
Min 5/16 inch---Max 7/16 inch

(2) Requirement
Spacing clutch disengaged. Front spacing feed pawl farthest advanced. Spacing drum fully returned. Play in spacing shaft gear (2.29) taken up clockwise. Clearance between pawl and shoulder of ratchet wheel tooth immediately ahead
Min 0.002 inch---Max 0.015 inch

(3) Requirement
Rear pawl, when farthest advanced, should rest at bottom of indentation between ratchet wheel teeth.

To Adjust
Position carriage return ring with mounting screws loosened.

(B) PRINTING CARRIAGE POSITION (2.51)

(C) PRINTING HAMMER STOP BRACKET (2.54)

(D) RIGHT MARGIN (2.56)

(E) TYPEBOX ALIGNMENT (2.57)

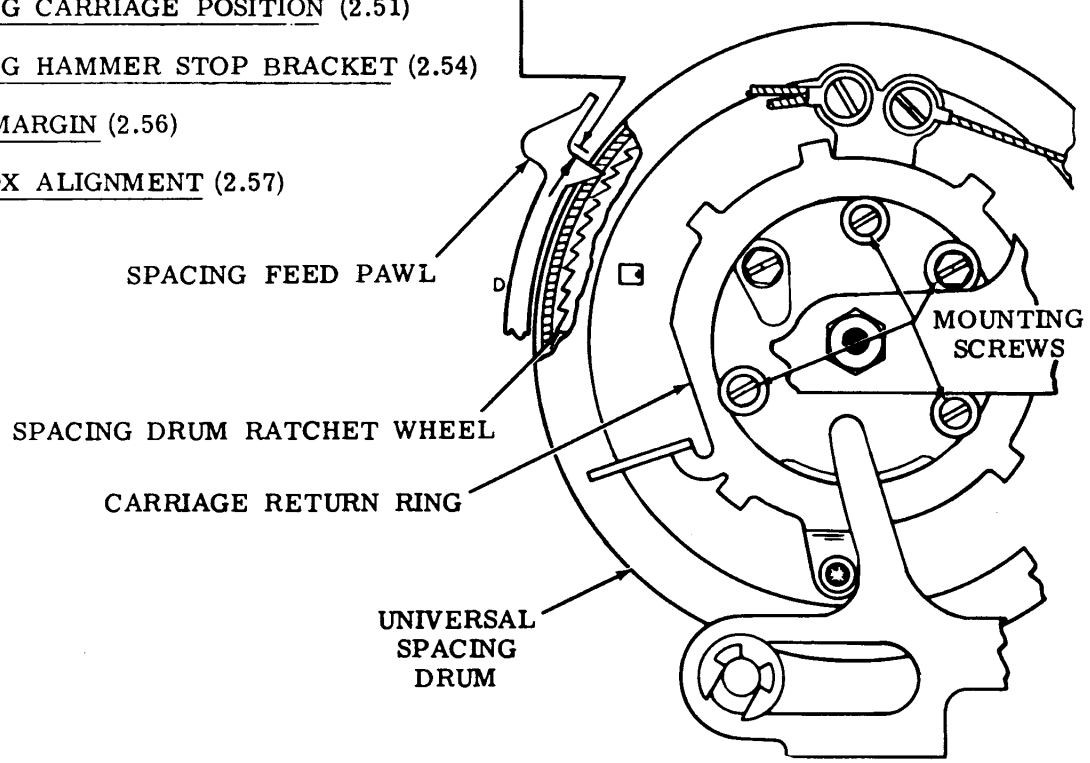

(Front View)

Note: Following this adjustment, all screws should be tightened.

2.79 Line Feed and Platen Mechanism (continued)

(A) LINE FEED SPUR GEAR DETENT ECCENTRIC Use 2.61.

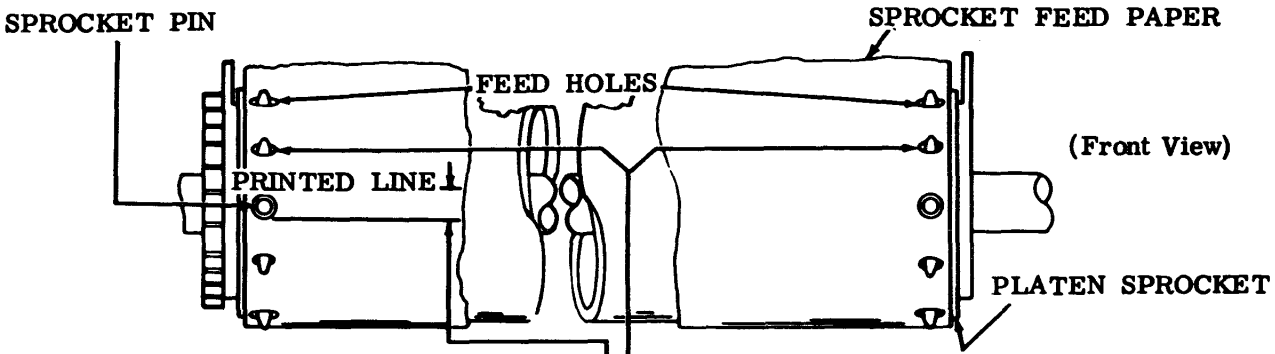

(B) PRINTED LINE (SPROCKET FEED)

Requirement
The bottom of the printed line should be 1/32 inch ± 1/64 inch (plus a multiple of 1/6 inch if required) above a horizontal line drawn even with the bottom edge of any sprocket hole.

To Adjust
Loosen screws and position left sprocket.

Note: This adjustment is dependent on the type of form, and the location of the first printed line. The tolerances are field limits therefore the adjustment is not made in the factory.

(C) PLATEN ENDPLAY (SPROCKET FEED)

Requirement
Line feed pawls disengaged. Platen shaft should have some endplay Max 0.010 inch

To Adjust
Position platen spur gear with clamp screw loosened.

(D) SPROCKET PIN SEPARATION (SPROCKET FEED)

(1) Requirement
With single sheet of sprocket feed paper placed on the platen the sprocket pins should be centrally located in the feed holes of the paper.

(2) Requirement
Printed line should be parallel to a line drawn perpendicular to edge of paper within plus or minus 1/32 inch.

To Adjust
Position right sprocket with clamp screw loosened.

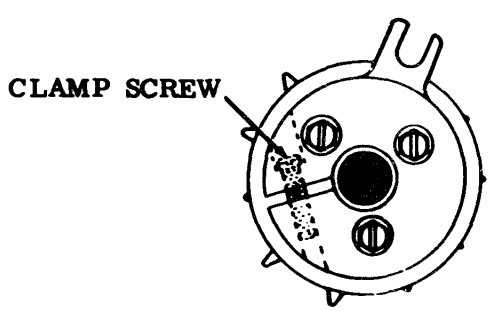

(Right Side Sprocket)

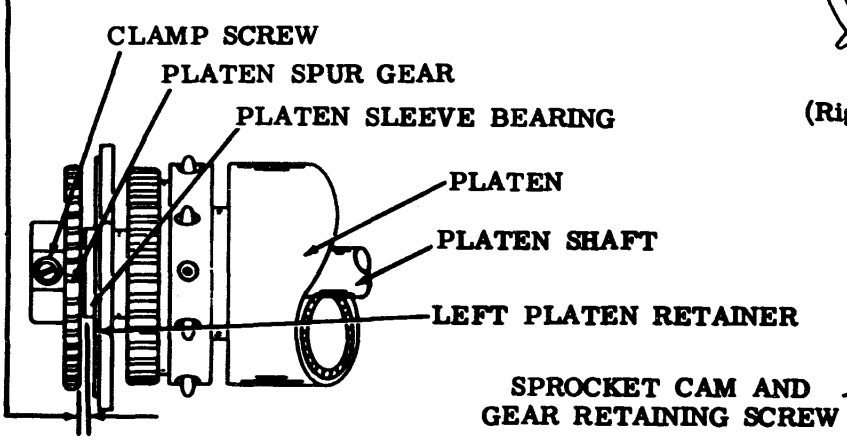

(Front View)

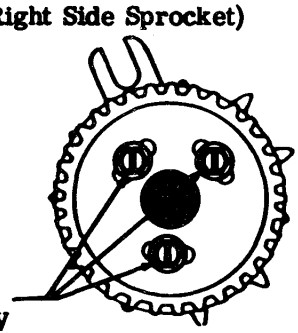

(Left Side Sprocket)

2.80 Line Feed and Platen Mechanism (continued)

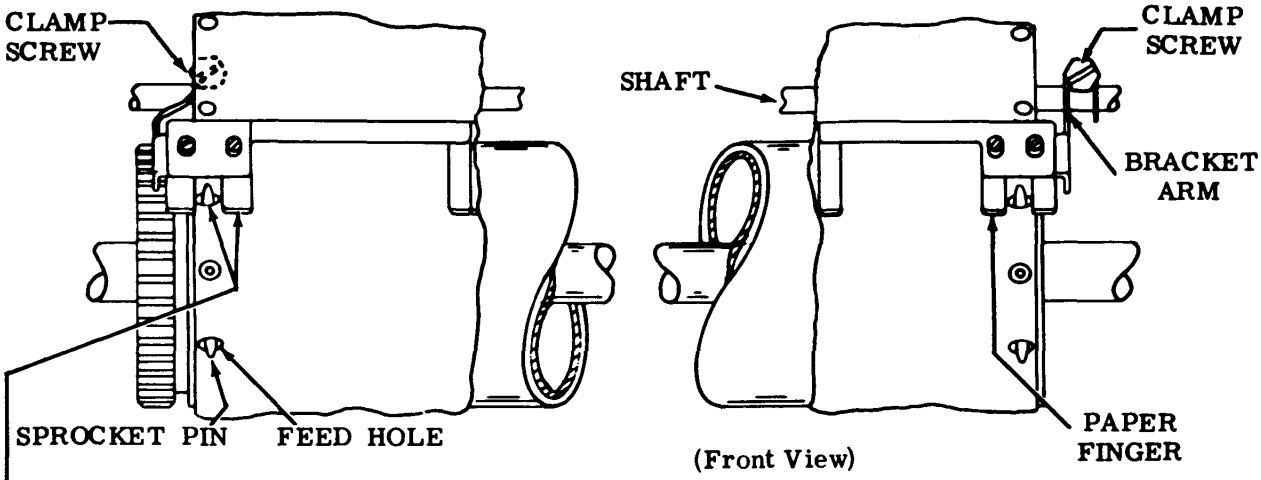

PAPER FINGER (SPROCKET FEED)

(1) Requirement
Sprocket pin should be centrally located in the paper finger slot.

(2) Requirement
The gap between the platen and the paper finger should be
Min 0.050 inch---Max 0.150 inch
(for stapled copies)
Min 0.020 inch---Max 0.060 inch
(unstapled or single copy).

Note: It is desirable to have the clearance at the minimum which will pass the stationery freely. This minimum is dependent upon the type of paper, number of copies, stapling, etc.

To Adjust
With paper finger assembly in latched position, loosen both clamp screws, position assembly horizontally to meet Requirement (1). Rotate assembly to meet Requirement (2).

(3) Requirement (Not Illustrated)
Min 0.035 inch
between leading edge of paper finger and ribbon guide. Both right and left paper fingers must be parallel to the same printed line as gauged by eye.

To Adjust
Select rubout combination and rotate typebox clutch 1/2 revolution. Position paper fingers by means of elongated mounting holes. After tightening the screws recheck Requirements (1), (2), and (3).

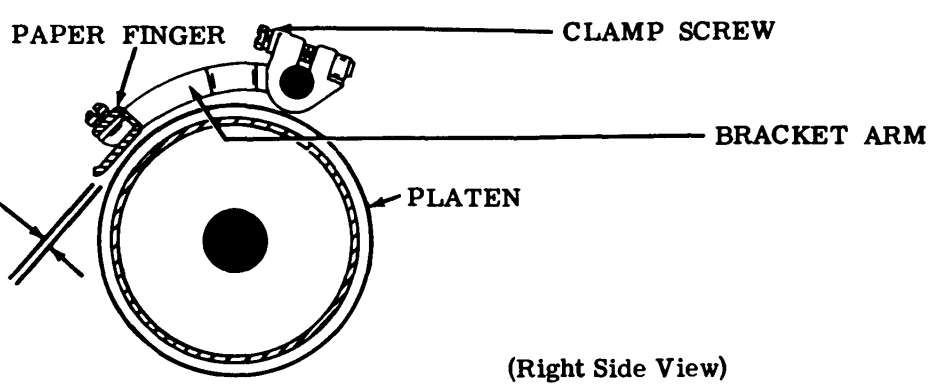

(Right Side View)

2.81 Line Feed and Platen Mechanism (continued)

(B) SPROCKET PIN SPRING (SPROCKET FEED)

Requirement (Early Design)
Pins to be tested aligned with slots in guide bracket.
Min 6 oz---Max 8 oz
to start depressing the pin.

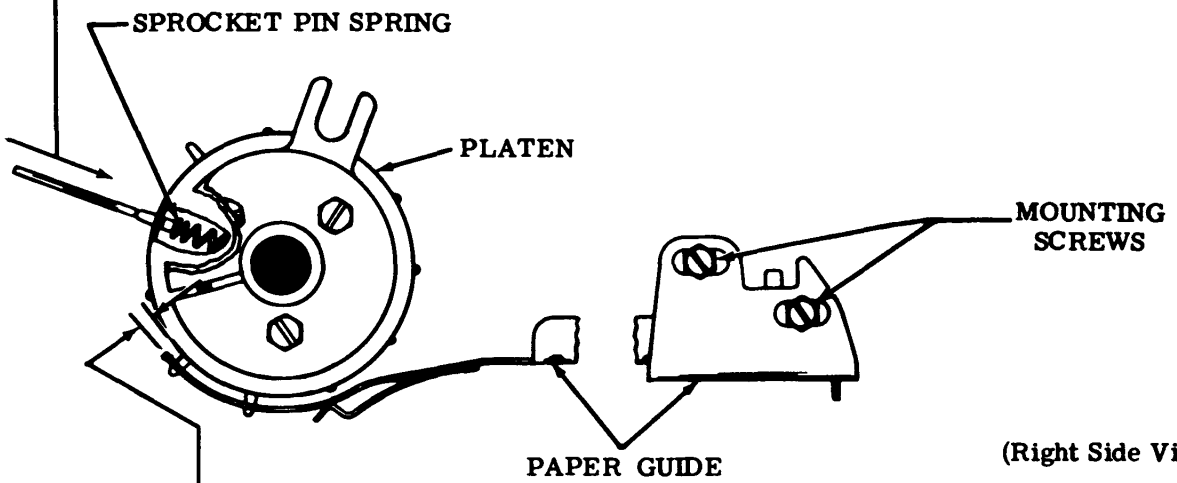

(Right Side View)

(A) PAPER GUIDE (SPROCKET FEED)

Requirement
The clearance between the platen and the front edge of the paper guide should be
Min 0.050 inch---Max 0.150 inch (stapled copies)
Min 0.020 inch---Max 0.060 inch (unstapled or single copy).

To Adjust
Position the guide with its rear mounting screws loosened.

(C) RIBBON REVERSE SPUR GEAR

Use 2.58.

(D) RIBBON REVERSE DETENT

Use 2.58.

(E) LINE FEED BAR BELLCRANK SPRING (SPROCKET FEED)

Use 2.61 except
Min 28 oz---Max 38 oz
to start bar moving.

Note: It is desirable to have the clearance at the minimum which will pass the stationery freely. This minimum is dependent upon the type of paper, number of copies, stapling, etc.

2.82 Function Mechanism (continued)

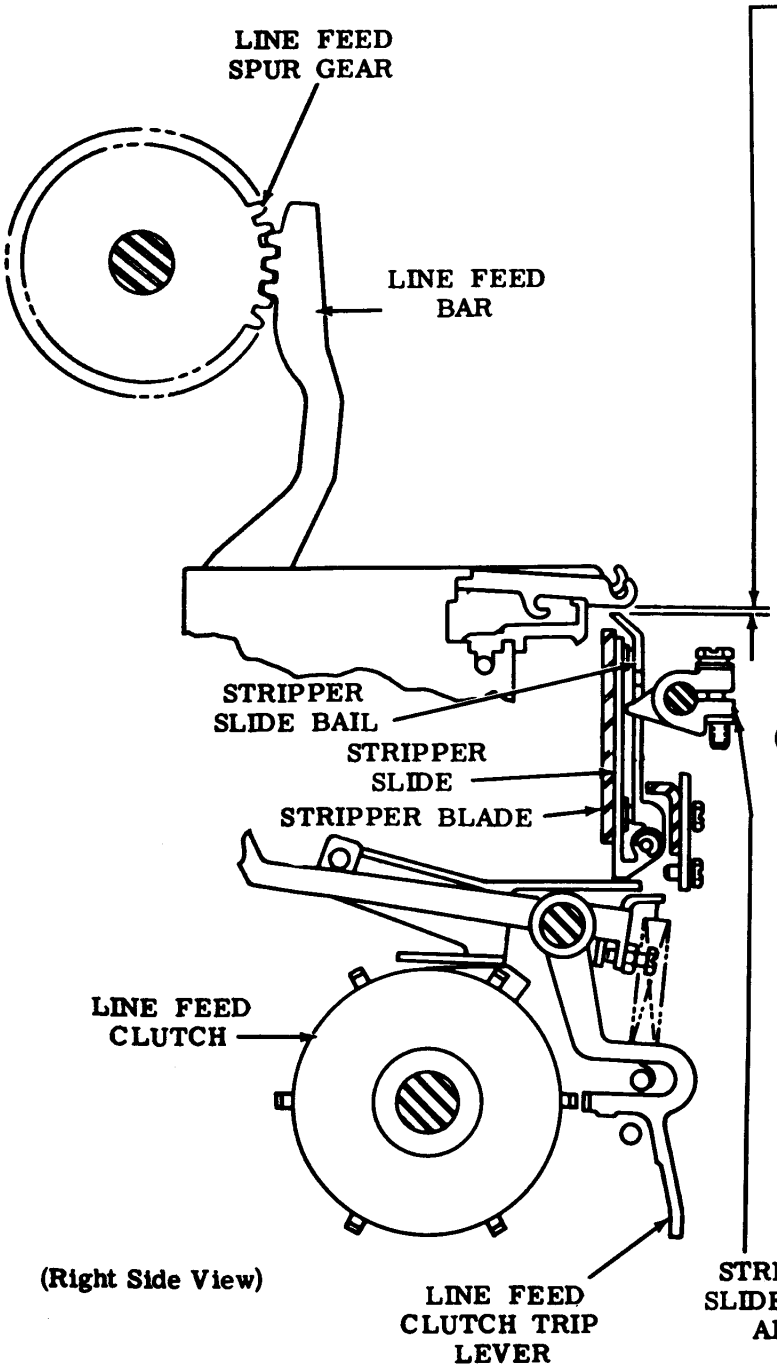

STRIPPER SLIDE BAIL ARM

(1) Requirement
Clearance between top edge of stripper slide bail and lower surface of the closest line feed function pawl should be
Min 0.030 inch---Max 0.045 inch

To Check
Single-double line feed lever in double line feed position and all clutches in latched stop position. Select line feed function. Rotate main shaft until codebar clutch stop lever just touches codebar clutch shoe lever. Take up play of stripper bail cam shaft drive arm to make clearance a maximum between the stripper bail and line feed function pawl. Take up play of stripper slide bail and function pawl in downward direction.

To Adjust
Position stripper slide bail arm with its clamping screw loosened. Position arm laterally to clear stripper slide when screw is tightened.

(2) Requirement
The line feed trip lever should reset at a point over, or just past, the second stop-lug by not more than 1/3 the distance between lugs.

To Check
Single-double line feed lever in double position. Select line feed function and rotate main shaft.

To Adjust
Refine LINE FEED CLUTCH TRIP LEVER ADJUSTING SCREW (2.25), if necessary. Recheck Requirement (1) of this adjustment.

2.83 Function Mechanism (continued)

STRIPPER SLIDE SPRING

Requirement
Stripper blade in its lowermost position.
Min 2 oz---Max 3 oz
to pull spring to installed length.

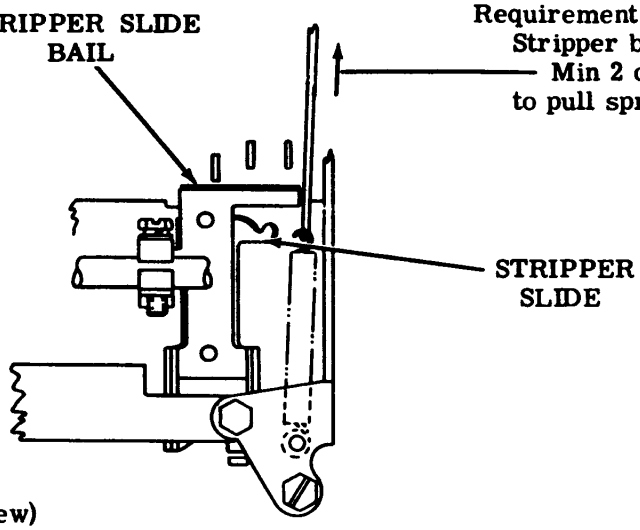

(Rear View)

STRIPPER SLIDE BAIL TORSION SPRING

Requirement
Single-double feed lever in single position.
Select line feed function and rotate main shaft until stripper slide bail just strips line feed function pawl.
Min 1 oz---Max 1-1/2 oz
to just start bail moving.

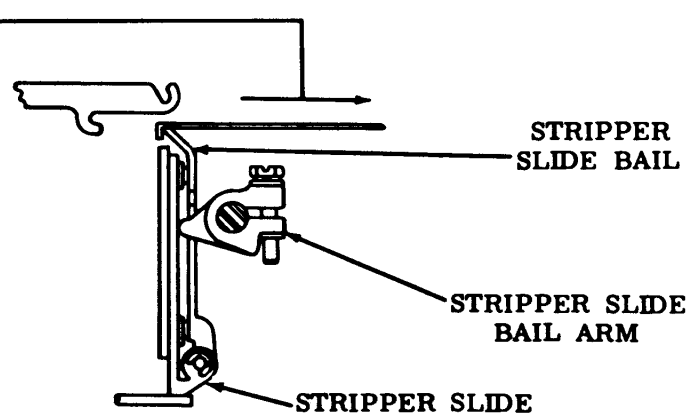

(Left Side View)

3. VARIABLE FEATURES

3.01 Vertical Tabulator Mechanism (For Bell System Switched Network Service)

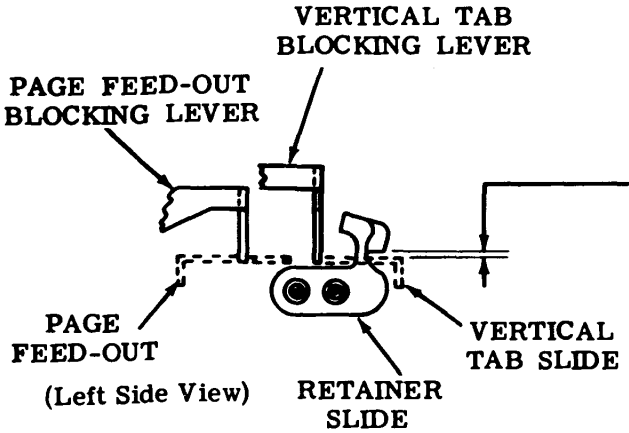

(A) VERTICAL TABULATOR SLIDE RETAINER

Requirement
Clearance between vertical tab slide and retaining edge of retainer
Min some---Max 0.012 inch

To Adjust
Move retainer to extreme forward position and locate up or down to meet requirement.

(B) MOUNTING BRACKET

(1) Requirement
Select form-out code combination and rotate main shaft until form-out slide is in forwardmost position. Clearance between form-out (inside) blocking lever and form-out slide.
Min some---Max 0.020 inch when play in blocking lever is taken up to make clearance minimum.

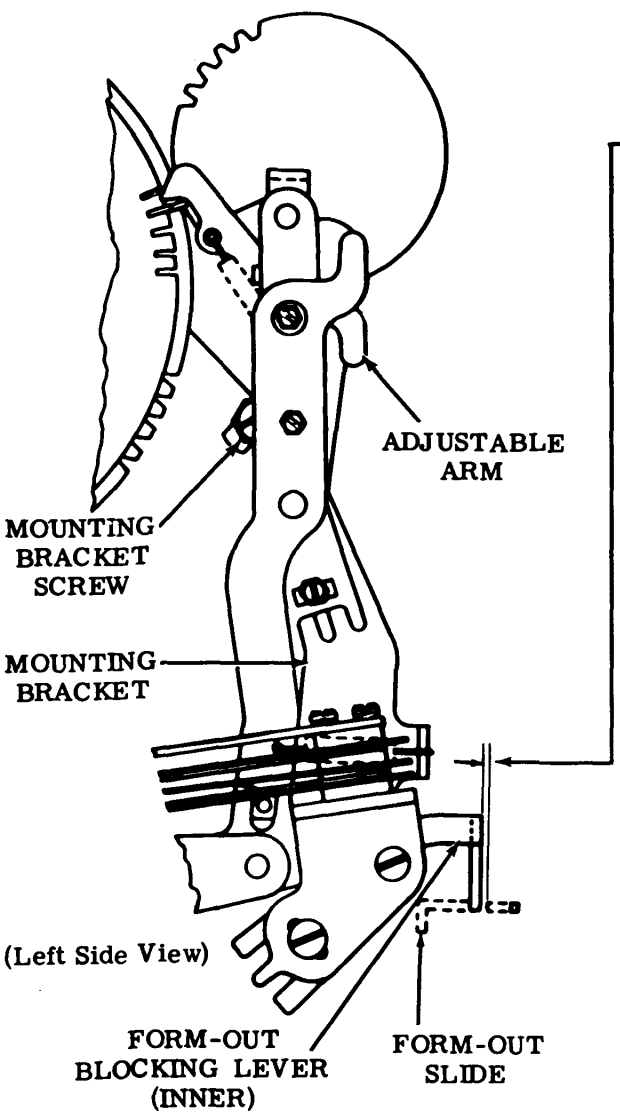

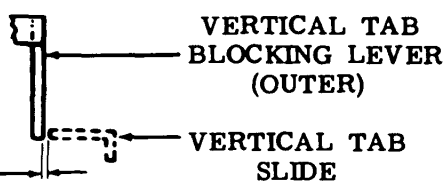

(2) Requirement
Select vertical tab code combination and rotate main shaft until vertical tab slide is in forwardmost position. Clearance between vertical tab slide and vertical tab blocking (outer) lever
Min 0.002 inch when play in blocking lever is taken up to make clearance minimum.

To Adjust
With mounting bracket screw friction tight, position lower portion of mounting bracket to meet Requirements (1) and (2).

3.02 Vertical Tabulator Mechanism (continued)
(For Bell System Switched Network Service)

(B) INDEXING DISC

Requirement
Line feed clutch disengaged. Form-out stop plate adjacent to form-out follower. Clearance between stop plate and follower
Min 0.015 inch---Max 0.040 inch
with slack taken up in idler and form start gears to make gap minimum.

To Adjust
Pull gear out of engagement with idler. Turn handwheel clockwise until a stop plate just operates follower and then engage first tooth on idler. Position disc with three mounting screws.

(C) POINTER ADJUSTMENT

Requirement
Line feed clutch disengaged. Form-out stop plate adjacent to follower. Pointer on printer side frame should line up with notch in index disc.

To Adjust
Pointer mounting screw, on printer side frame, friction tight. Position pointer so it lines up with notch on index disc, and clears any stop plate by approximately 1/16 inch.

(A) FORM START GEAR PLAY

Requirement
Barely perceptible backlash between idler gear and form start gear.

To Adjust
Position gear pivot post on bracket by nut in center of handwheel. Check in at least three position, 120 degrees apart.

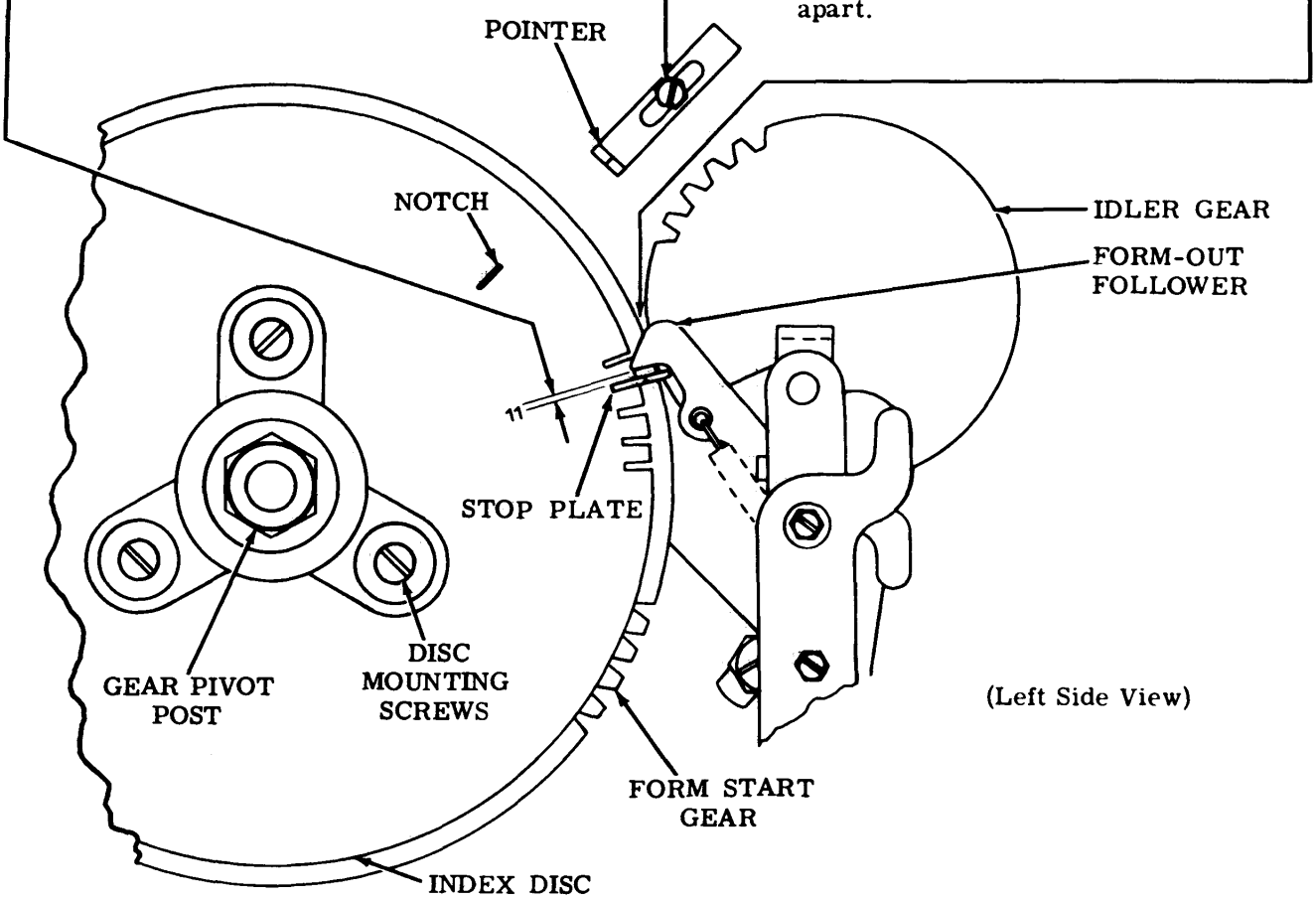

(Left Side View)

3.03 Vertical Tabulator Mechanism (continued)
(For Bell System Switched Network Service) (Transmitter Control Switch Adjustments)

(D) NORMALLY OPEN CONTACT GAP

Requirement
Blocking levers unoperated. Gap between normally open contacts
Min 0.008 inch---Max 0.012 inch

To Adjust
Bend stiffener.

(A) TRANSFER CONTACT SPRING

Requirement
Blocking levers unoperated.
Min 2 oz---Max 3 oz
to just open contacts. Bend long contact spring to meet requirement.

(H) VERTICAL TAB BLOCKING LEVER SPRING

Requirement
Blocking lever arms resting on top of their slides. Unhook blocking lever spring from mounting bracket.
Min 9 oz---Max 11 oz
to pull spring to operating length. Check both blocking lever springs.

(B) NORMALLY OPEN CONTACT SPRING

Requirement
Blocking levers unoperated
Min 1 oz---Max 2 oz
to just move short contact spring away from stiffener. Bend short contact spring to meet requirement.

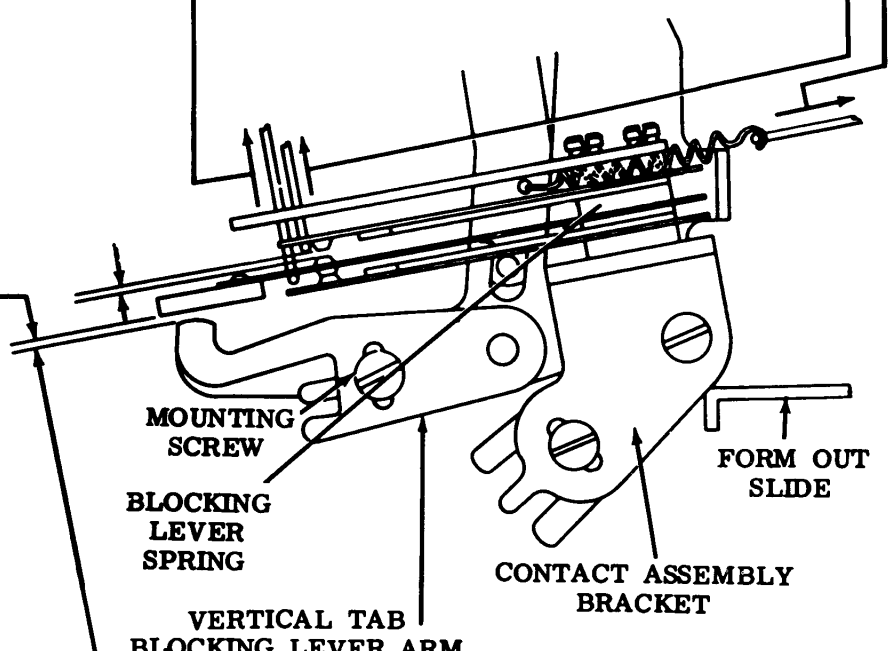

(Left Side View)

(F) VERTICAL TAB BLOCKING LEVER ARM

Requirement
Vertical tab blocking lever resting on top of slide, clearance between blocking lever arm and insulator pad
Min some

To Adjust
Position blocking lever arm with mounting screws friction tight.

(E) CONTACT BRACKET

Requirement
Form-out blocking lever resting on top of form-out slide. Clearance between blocking lever and insulator tip of swinger
Min some

To Adjust
Position contact assembly bracket with mounting screws friction tight.

3.04 Vertical Tabulator Mechanism (continued)
(For Bell System Switched Network Service) (Transmitter Control Switch Adjustments)

(G) NORMALLY CLOSED CONTACT GAP

(1) Requirement
Select form-out code combination. Rotate main shaft until form-out slide is in forwardmost position and form-out blocking lever drops behind slide. Clearance between normally closed contact points
Min 0.008 inch

To Adjust
Refine NORMALLY OPEN CONTACT GAP and CONTACT BRACKET (3.03, (D) and (E)).

(2) Requirement
Select vertical tab code combination. Rotate main shaft until vertical tab slide is in forwardmost position and vertical tab blocking lever drops behind slide. Clearance between normally closed contact points
Min 0.008 inch

To Adjust
Refine NORMALLY OPEN CONTACT GAP and VERTICAL TAB BLOCKING LEVER ARM (3.03, (D) and (F)).

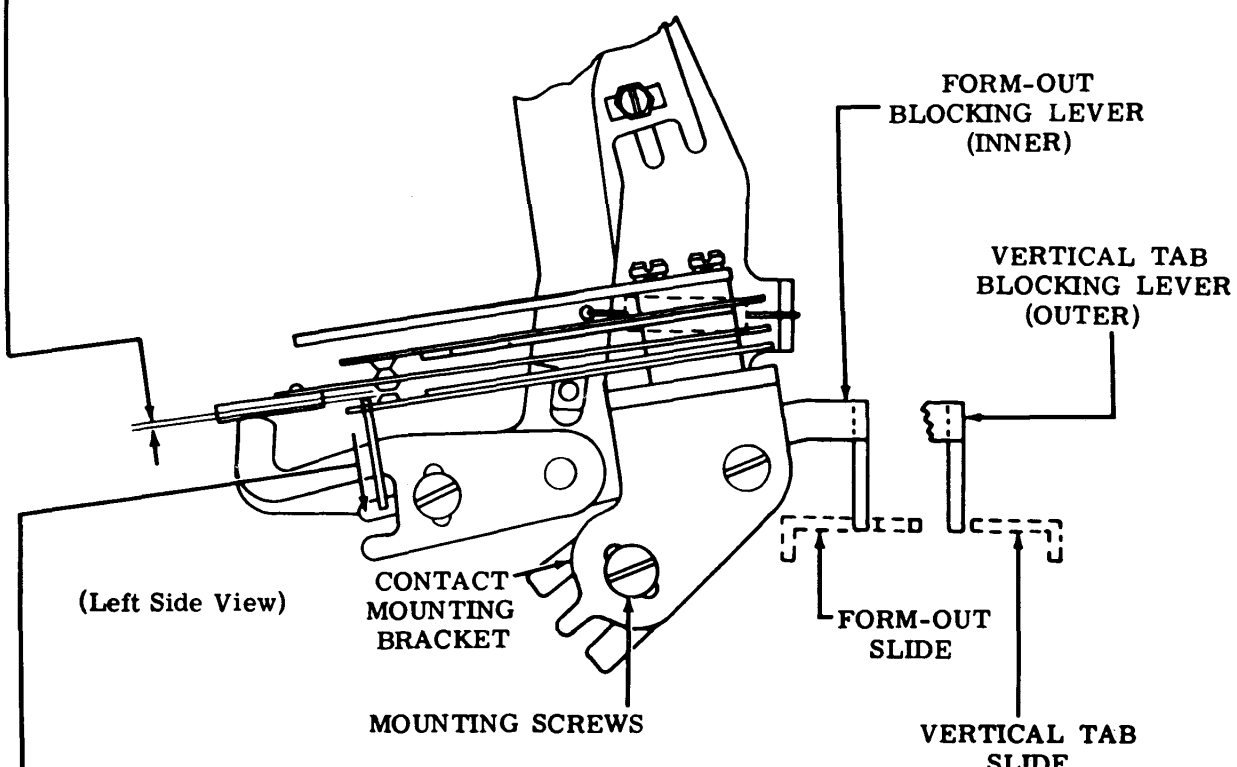

(C) NORMALLY CLOSED CONTACT SPRING

Requirement
Blocking levers operated
Min 2 oz---Max 3 oz
to just move short contact spring away from stiffener.
Bend short contact spring to meet requirement.

3.05 Vertical Tabulator Mechanism (continued)
(For Bell System Switched Network Service) (Form-Out and Tabulator Stops)

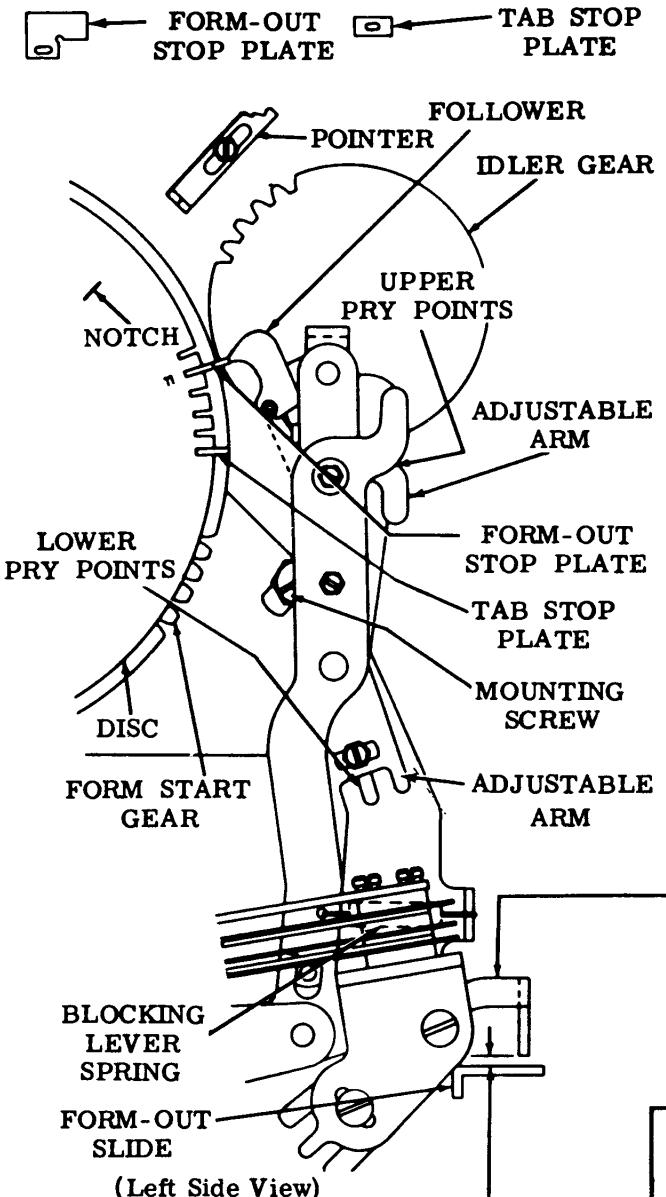

Note 1: Form-Out Stop Adjustment — Form-out index plates should be placed in numbered slots corresponding to length of form to be used. Form-out device may now be synchronized with form by first positioning form so that typing unit prints in first typing line of form. (When typing unit is in stop position, top of ribbon guide lines up with bottom of printing line.) With form in this position, pull form start gear out of engagement with idler and turn it until pointer on printer side is lined up with notch in index disc. (Form start gear is held in engagement with idler by spring tension, and may be disengaged by pulling the handwheel assembly out to left.)

Note 2: Tabulation Stop Adjustment — Tabulation stops within a form may be synchronized by first positioning form so typing unit will print on first typing line of form. (Procedure is outlined in Note 1.) Next, line feed platen to desired first printing line in form. Place tab stop plate in disc slot which lines up with vertical tab follower (inner). In same manner, place tab stop plates at succeeding desired printing lines within form. Tab stop plates may be placed on their sides in disc to nullify undesired printing positions on form.

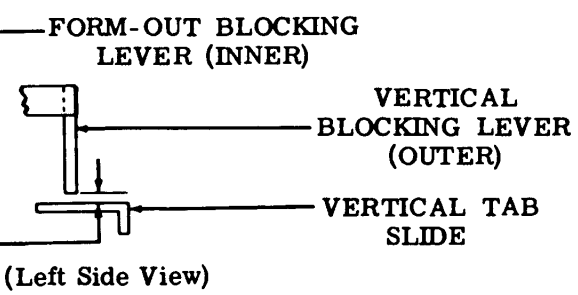

BLOCKING ARM (FORM-OUT)

Requirement
Clearance between bottom of form-out blocking lever and top of form-out slide
Min 0.005 inch---Max 0.045 inch

To Check
Trip line feed clutch. Rotate main shaft until form-out follower is on peak of form-out stop plate.

To Adjust
Position adjustable arm at lower pry points with clamp screw loosened.

BLOCKING ARM (VERTICAL TAB)

Requirement
Clearance between bottom of vertical tab blocking lever and top of vertical tab slide
Min 0.005 inch---Max 0.045 inch

To Check
Trip line feed clutch. Rotate main shaft until vertical tab follower is on peak of tab stop plate.

To Adjust
Position adjustable arm at upper pry points with clamp screw loosened.

3.06 Vertical Tabulator Mechanism (continued)
(For Bell System Switched Network Service) (Off Normal Contact Adjustments)

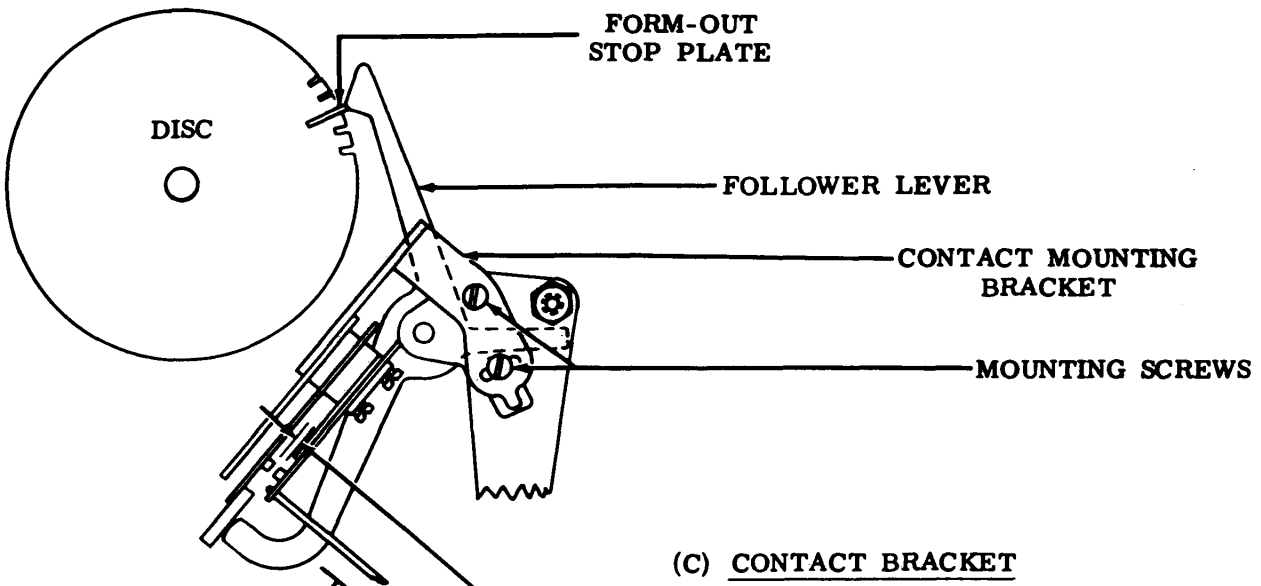

(Left Side View)

(C) CONTACT BRACKET

Requirement
Follower lever on peak of a form-out stop plate. Clearance between contact points
Min 0.010 inch---Max 0.020 inch

To Adjust
Position contact assembly bracket with mounting screws friction tight.

(A) SHORT CONTACT SPRING

Requirement
Follower lever operated.
Min 2 oz---Max 3 oz
to just move short contact spring away from stiffener. Bend short contact spring to meet requirement.

(B) LONG CONTACT SPRING

Requirement
Follower lever unoperated.
Min 2 oz---Max 3 oz
to just open contacts. Bend long contact spring to meet requirement.

(D) FOLLOWER LEVER

Requirement
Index disc rotated to bring form-out stop plate one slot away from operating position. Clearance between follower lever and insulator tip
Min 0.010 inch---Max 0.020 inch

To Adjust
Rotate eccentric post until requirement is met.

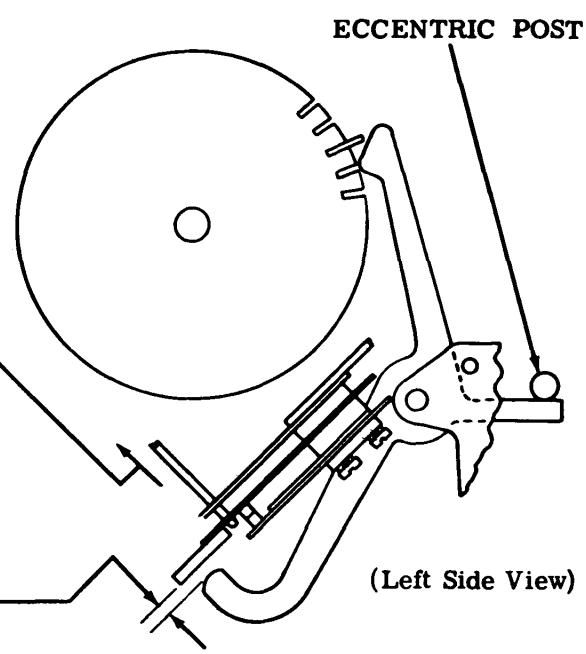

(Left Side View)

3.07 Vertical Tabulator Mechanism (continued)
(Common to 3.01 and 3.24)

FORM-OUT PAWL SPRING

Requirement
Form-out pawl extension resting against backstop.
Min 3 oz---Max 8 oz
to move pawl away from backstop.

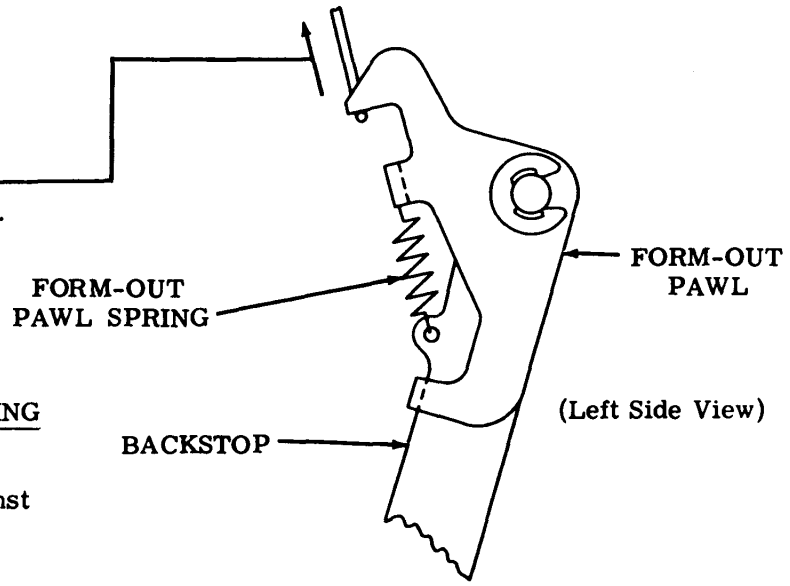

VERTICAL TABULATOR BAIL SPRING

Requirement
Extension of tab bail resting against backstop.
Min 3 oz---Max 8 oz
to move bail away from backstop.

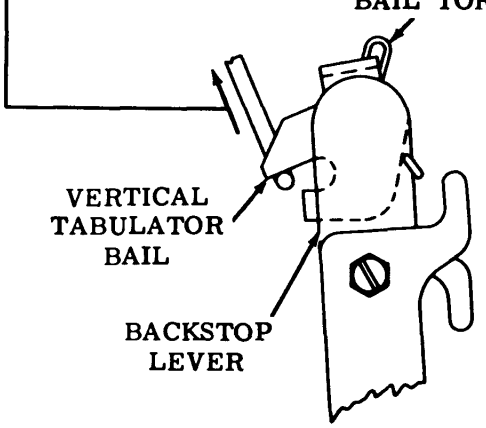

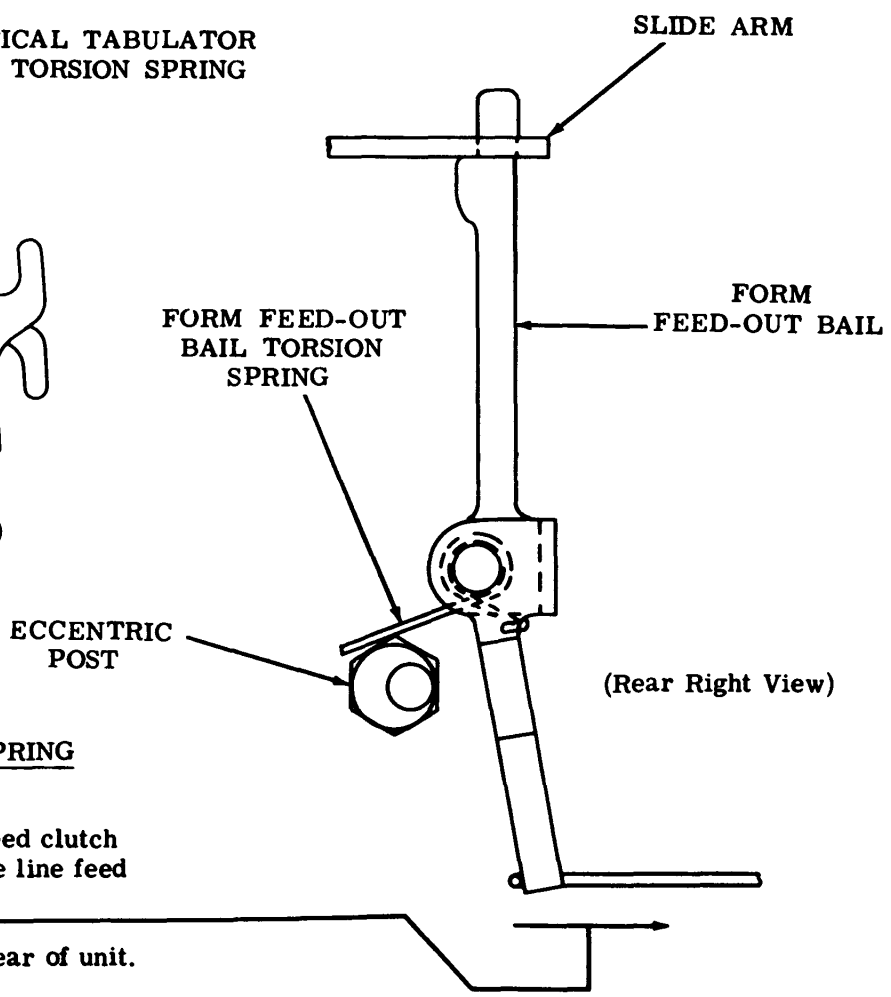

FORM FEED-OUT TORSION SPRING

Requirement
Rotate main shaft until line feed clutch is in stop position. Disengage line feed clutch trip lever.
Min 2 oz---Max 6 oz
to start bail moving toward rear of unit.

3.08 Form-Out Mechanism

(A) FORM-OUT LEVER BACKSTOP

Requirement

Line feed clutch trip lever against eccentric post. Form-out lever against formed extension of mounting plate. Clearance between trip lever and form-out lever

Min some---Max 0.010 inch

To Adjust

Loosen adjusting screw. Hold lower end of form-out lever against extension of mounting plate. Position upper end of form-out lever. Tighten screw.

(B) SOLENOID LEVER (See also 3.09.)

Requirement

When solenoid plunger is seated, form-out slide, through combined motions of nonrepeat slide, form-out lever and form-out bail, should have moved forward to permit form-out blocking lever to fall in behind it. Clearance between slide and blocking lever

Min 0.020 inch---Max 0.030 inch

To Adjust

Rotate eccentric screw to meet requirement. Make adjustment with high point of eccentric guide upward.

(C) FORM FEED-OUT NONREPEAT SLIDE SPRING

Requirement

Typing unit upside down and form feed-out solenoid unoperated

Min 3 oz---Max 4 oz

to pull spring to position length.

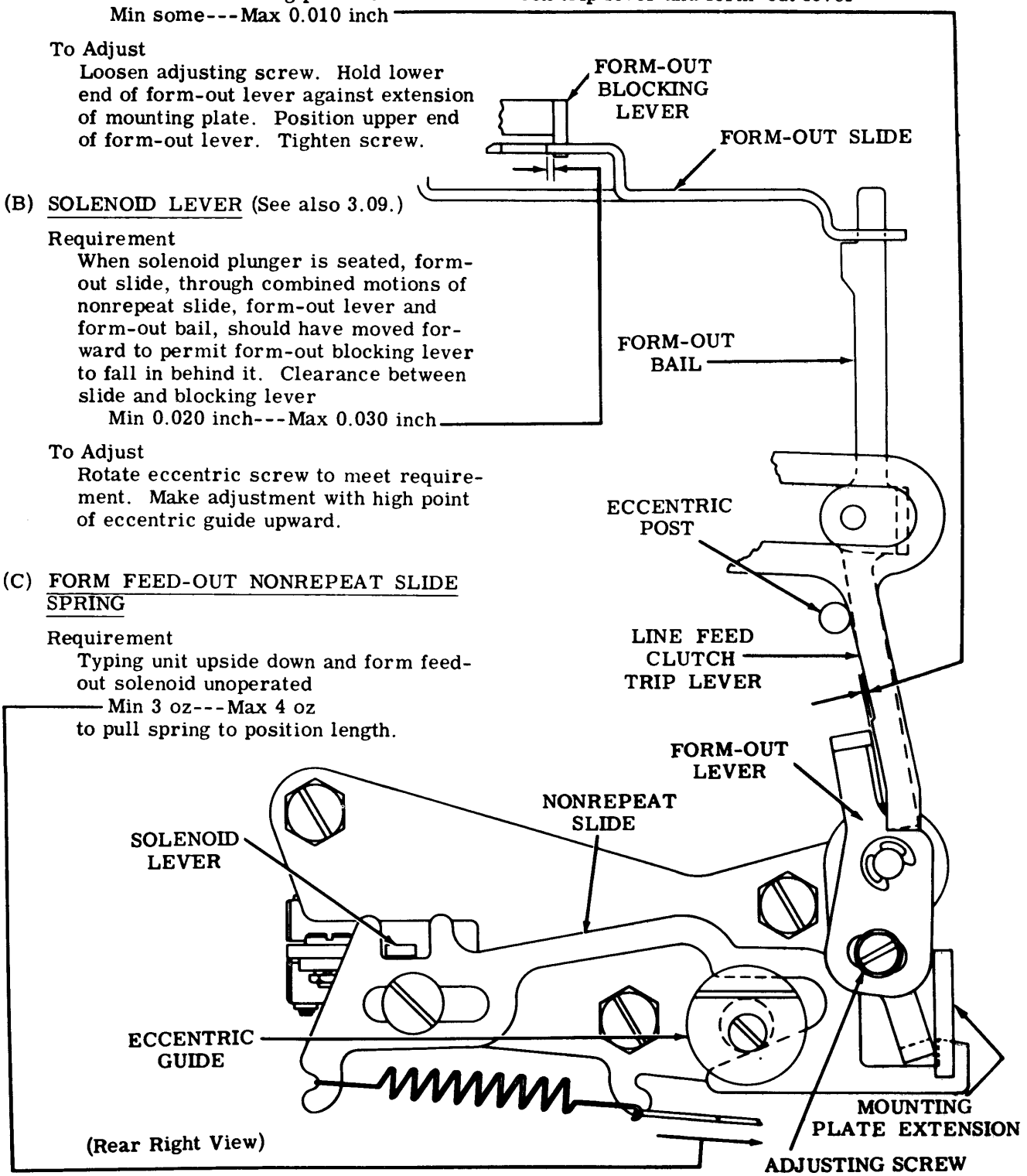

3.09 Form-Out Mechanism (continued)

Note: This adjustment insures that nonrepeat slide is stripped out of engagement with form-out lever before solenoid plunger is fully seated. It will also reduce the Min 0.020 inch---Max 0.030 inch clearance between form-out blocking lever and form-out slide, 3.08 (B), at point of stripping. Check for at least some clearance at this point. Solenoid plunger must not bind against solenoid. Loosen mounting screws and move solenoid up or down.

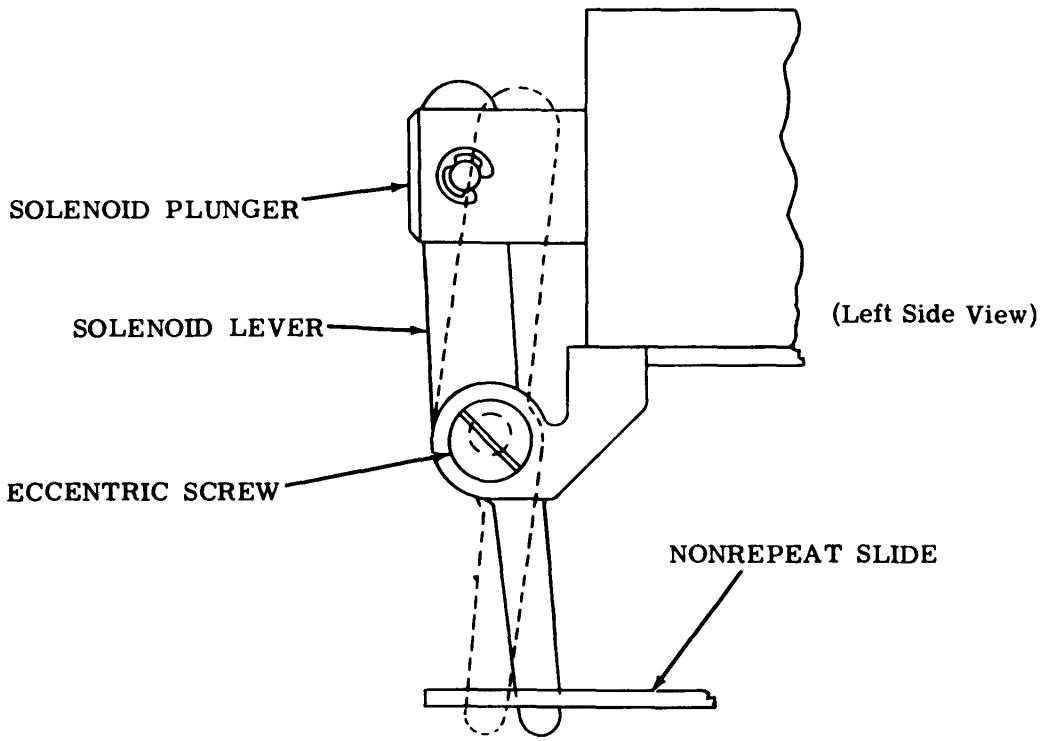

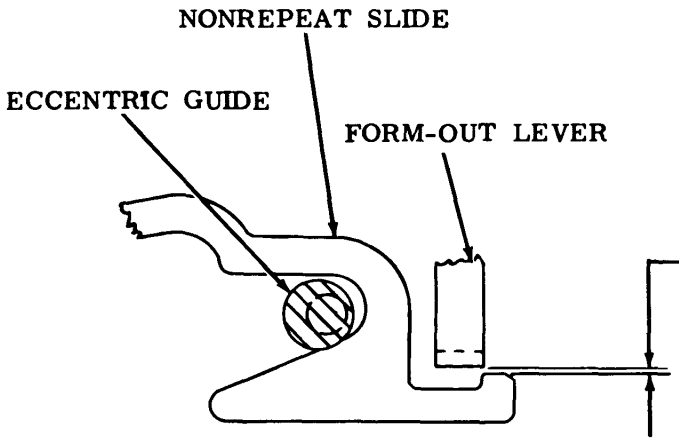

(Rear Right View)

NONREPEAT SLIDE

(See also 3.08 (B).)

Requirement
Solenoid plunger seated. There should be some clearance between the nonrepeat slide and the form-out lever.

To Adjust
With high point of eccentric toward front, rotate eccentric guide to meet requirement.

3.10 Low Paper and Paper Out Alarm Mechanisms

LOW PAPER AND PAPER OUT ALARM
(SPROCKET FEED)

(1) Requirement
Without paper in unit, rear ends of switch operating levers should be in lowermost position. Switch plungers should be depressed. Normally open contacts should be closed. Ends of switch levers should be within outline of typing unit frame.

(2) Requirement
Rear ends of switch operating levers lifted to height of plane of upper surface of paper guide, switch plungers should be extended.
Min some
clearance between switch levers and plungers.

To Adjust
Position plate with switch mounting plate mounting screws friction tight.

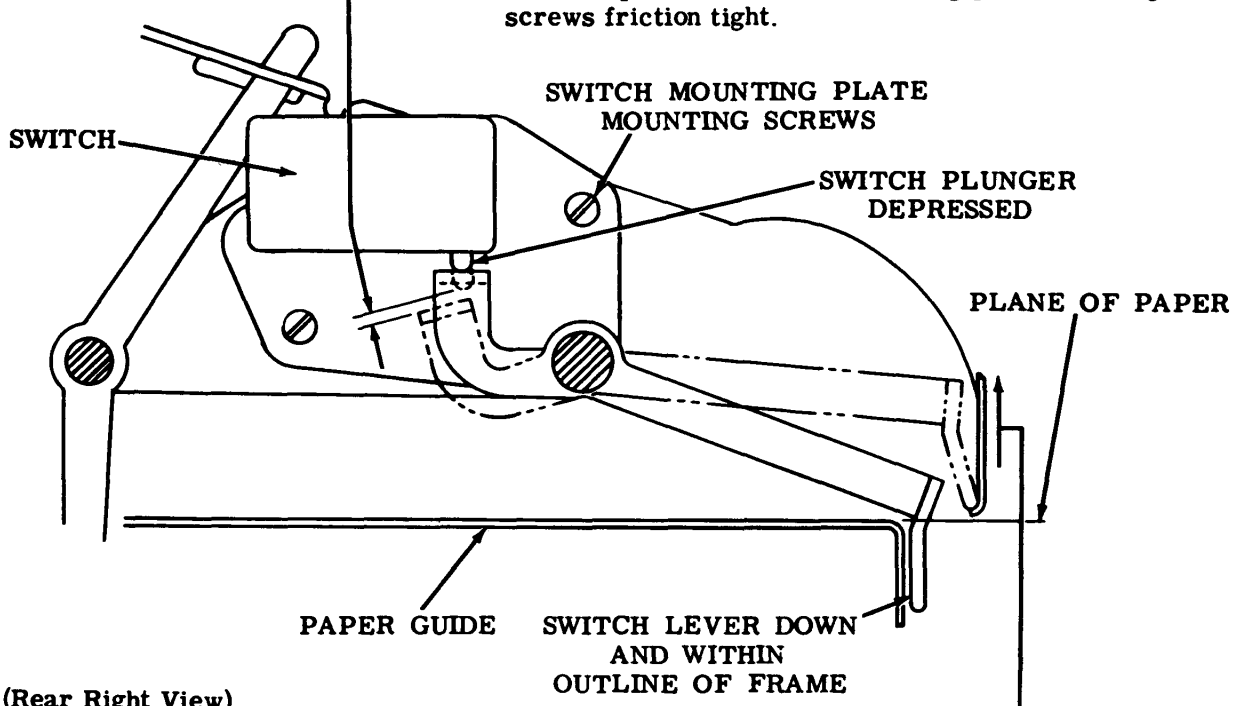

(Rear Right View)

PAPER OUT ALARM SENSING LEVER SPRING
(SPROCKET FEED)

Requirement
Min 1/2 oz---Max 1 oz
to lift end of lever, which rides paper, to same plane as upper surface of paper guide. Measure both sensing lever springs in same manner.

3.11 Paper Out Alarm Mechanism (continued)
(Friction Type) (Later Design)

Note: Adjustment requirements for the new-style paper-out alarm.

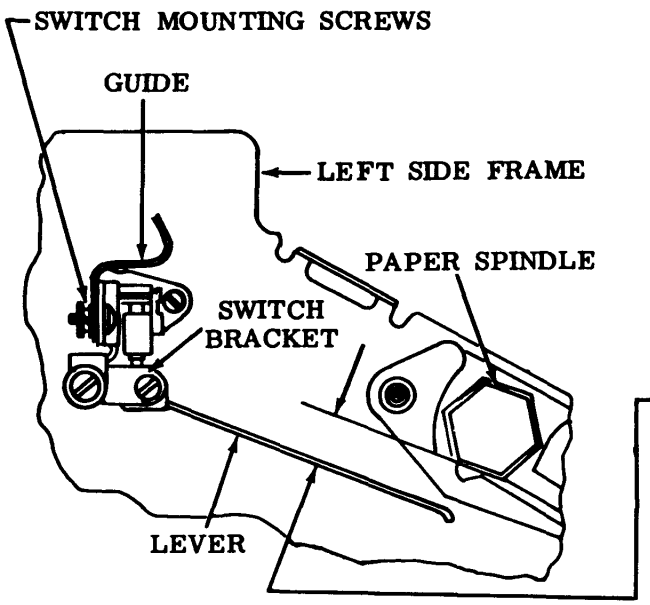

(Right Side View)

SWITCH

Requirement
Switch in uppermost position parallel to switch bracket.

To Adjust
Position switch with switch mounting screws loose.

LEVER

Requirement
Flat side of empty paper spindle parallel with upper surface of lever extension. Lever 1/4 inch below paper spindle.

To Adjust
Position bracket with post vertically up or down with mounting screws loose. If necessary, form the lever by hand.

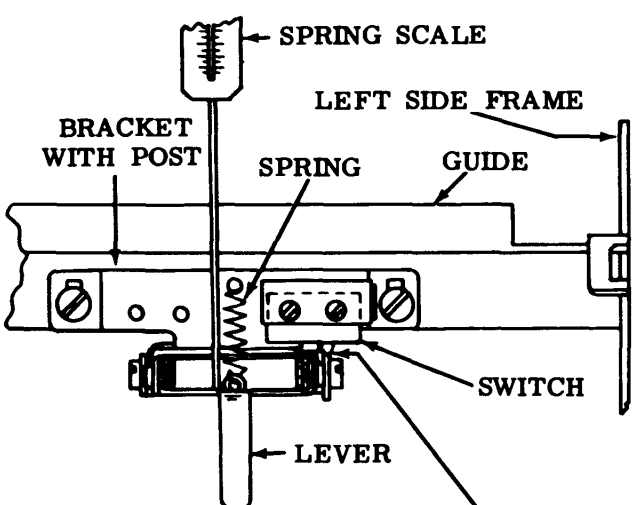

(Rear View)

LEVER SPRING

Requirement
Spring scale applied in downward direction to lever near spring eye
Min 11 oz---Max 18 oz
to move switch lever
clear of switch button.

3.12 Low Paper and Paper Out Alarm Mechanism (continued)

PAPER OUT ALARM BELLCRANK FOLLOWER SPRING (FRICTION FEED) (Early Design)

Requirement
Roll of paper removed from unit.
Min 3-1/2 oz---Max 4-1/2 oz
to move lever far enough to just clear lower switch.

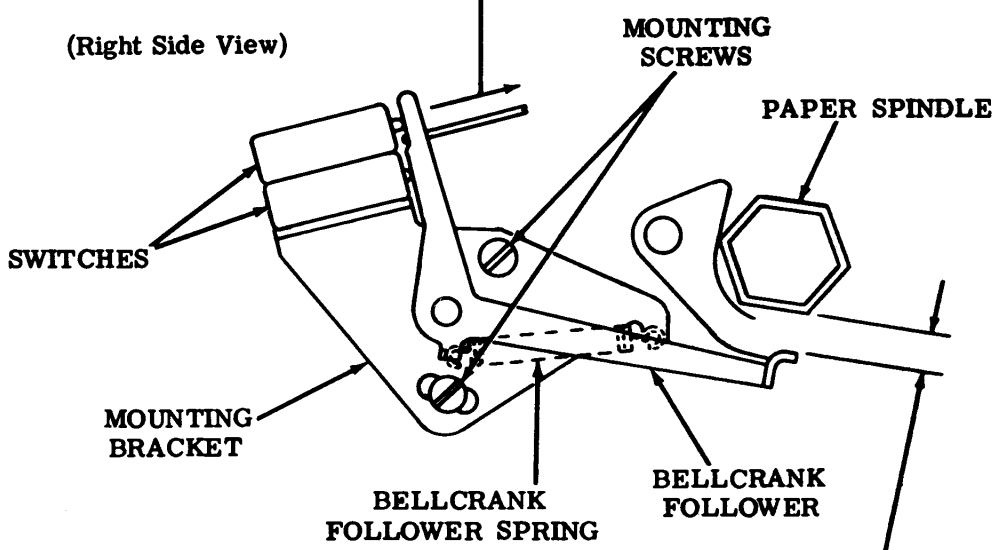

PAPER OUT ALARM ASSEMBLY (FRICTION FEED)

(1) Requirement (Early Design)
The upper switch should operate when paper supply is reduced to approximately
Min 10 feet---Max 15 feet
on the roll.

(2) Requirement
Paper follower bellcrank should operate upper switch at approximately 1/4 inch from flat side of empty paper spool.

To Adjust
Position bracket with two bracket mounting screws friction tight.

3.13 Horizontal Tabulator Mechanism

HORIZONTAL TAB OPERATING LEVER EXTENSION LINK SPRING

Requirement

Unhook trip arm latchlever spring. Operating lever in operated position. Slide arm against blocking lever.

Min 8-3/4 oz---Max 10-3/4 oz

to start link moving.

Note: On units equipped with transmitter control contacts, hold contact spring away from stud while measuring tension.

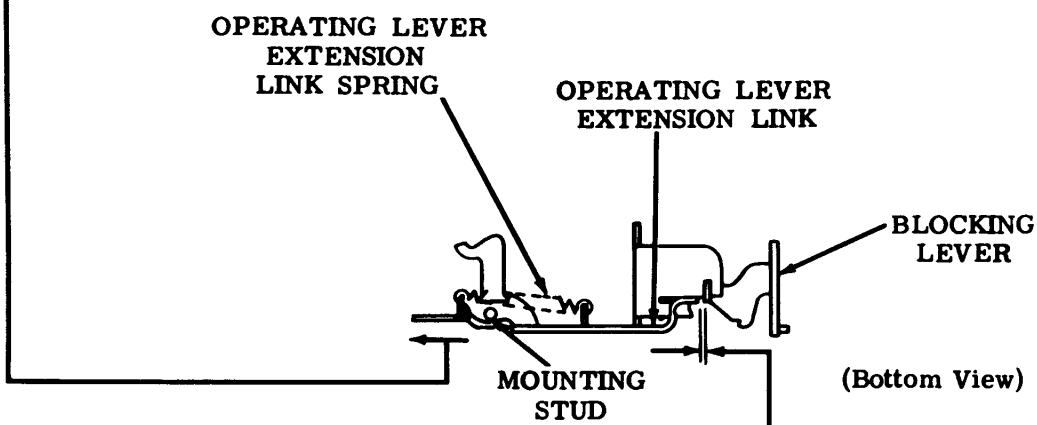

HORIZONTAL TAB OPERATING LEVER LINK

Requirement

Rotate function clutch until function pawl stripper blade is in lower position, and function reset bail roller on high part of cam. Pull horizontal tab function pawl to rear until latched on function bar. Clearance between operating lever extension link and blocking lever

Min 0.005 inch---Max 0.025 inch

with play taken up to minimize clearance.

To Adjust

Position extension link on operating lever with mounting stud friction tight.

Note: When pulling function pawl to rear, if operating lever cam plate should be stripped off the tab slide arm before function pawl is latched on function bar, temporarily disable cam plate stripper bail arm by loosening its adjusting screw.

3.14 Horizontal Tabulator Mechanism (continued)

HORIZONTAL TAB INTERMEDIATE BAIL SPRING

Requirement
Trip lever arm and intermediate bail unoperated
Min 1-1/2 oz---Max 3-1/2 oz
to pull spring to installed length.

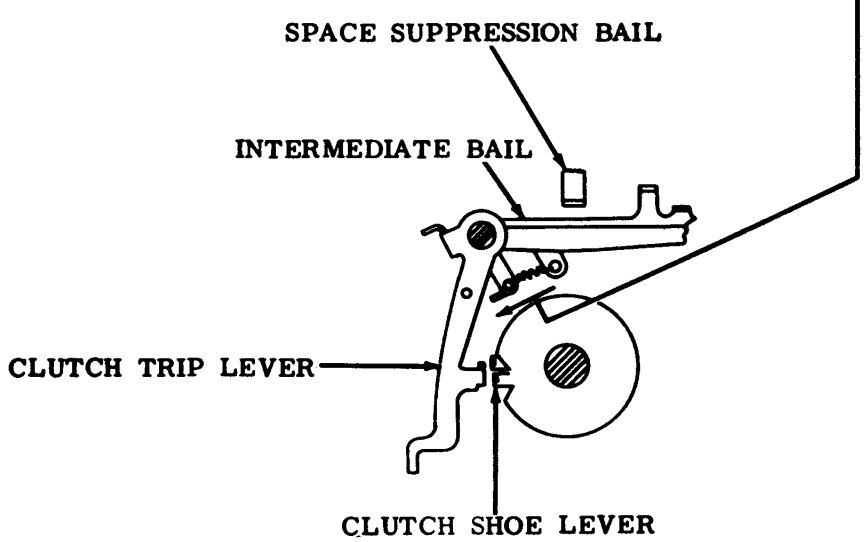

(Left Side View)

3.15 Horizontal Tabulator Mechanism (continued)

(B) HORIZONTAL TAB SPACING TRIP LEVER

Requirement
Spacing clutch trip lever arm against its stop. Operating lever against adjusting screw. Clearance between spacing trip lever and trip lever arm
Min some---Max 0.010 inch

To Adjust
Loosen mounting screw and mounting stud friction tight. With spacing trip lever riding on clutch trip lever arm, slowly rotate operating lever adjusting plate by means of screwdriver pry slots until spacing trip lever just falls off trip lever arm.

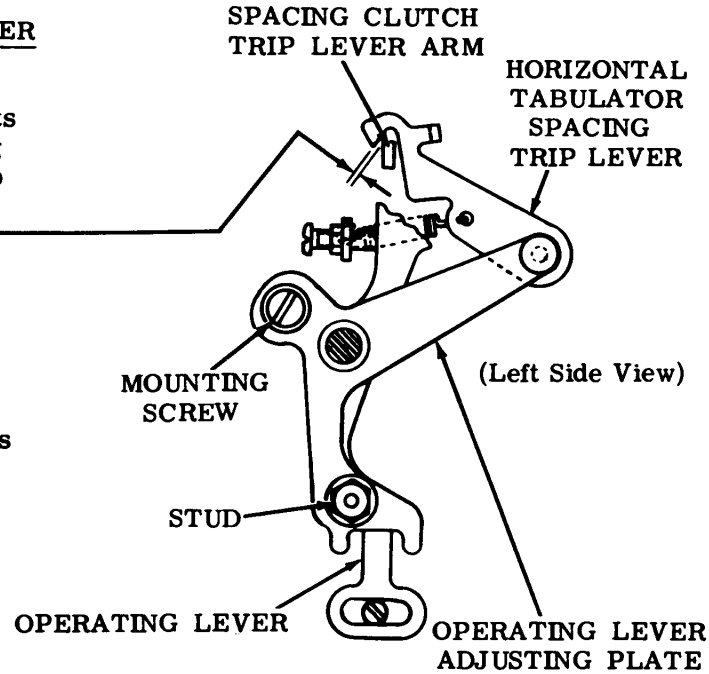

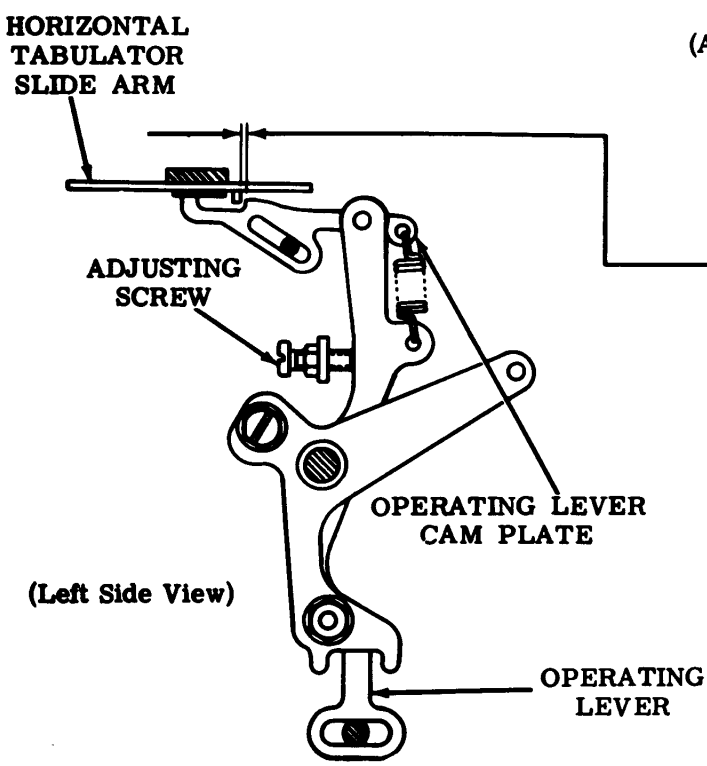

(A) HORIZONTAL TAB OPERATING LEVER CAM PLATE

(1) Requirement
Horizontal tab slide arm unoperated. Operating lever against adjusting screw. Clearance between slide arm and cam plate
Min some

(2) Requirement
With the operating lever extension link in the operated position, it should engage at least 2/3 of the surface of the step in the blocking lever, as gauged by eye.

To Adjust
Position adjusting screw.

3.16 Horizontal Tabulator Mechanism (continued)

HORIZONTAL TAB OPERATING LEVER CAM PLATE SPRING

Requirement
Operating lever unoperated. Horizontal tab function pawl unlatched.
Min 4 oz---Max 9 oz to start stripper bail moving.

HORIZONTAL TAB SLIDE ARM SPRING

Requirement
Operating lever operated. Slide arm unoperated.
Min 1-1/2 oz---Max 4 oz to start slide moving.

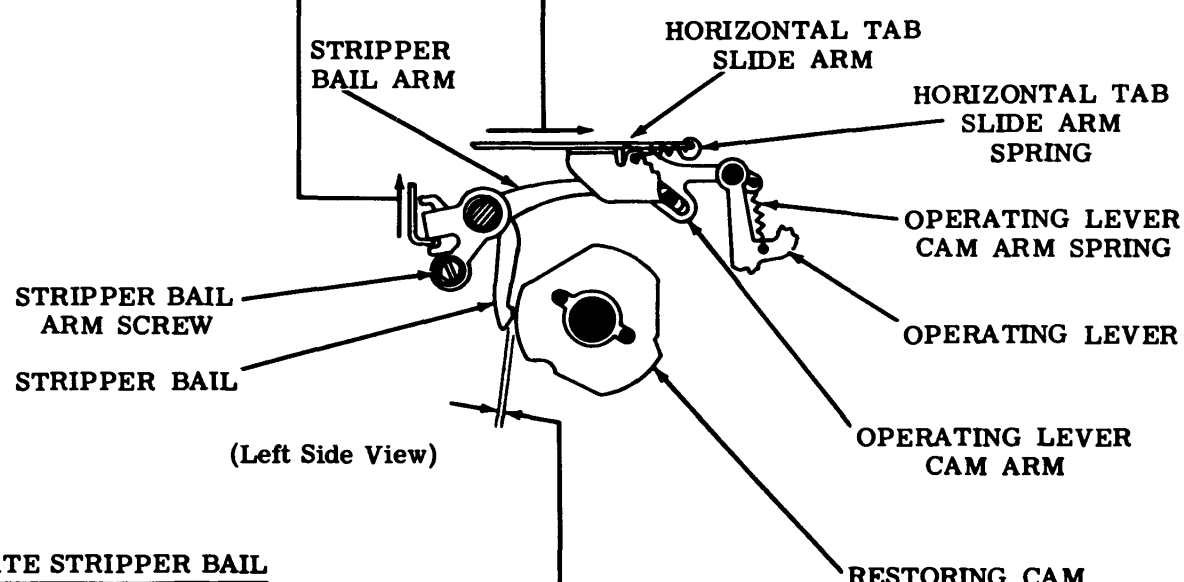

(Left Side View)

CAM PLATE STRIPPER BAIL

Requirement
Operating lever and horizontal tab slide arm unoperated. Rotate spacing clutch until high of restoring cam is opposite stripper bail. Clearance between stripper bail and high of restoring cam
Min 0.010 inch---Max 0.025 inch

To Adjust
Position stripper bail on stripper bail arm with stripper bail arm screw friction tight.

3.17 Horizontal Tabulator Mechanism (continued)

(A) SPACING CUTOUT TRANSFER BAIL SET COLLAR

Requirement
Transfer bail should have
Min some---Max 0.008 inch
endplay.

To Adjust
Position set collar with adjusting screw loosened.

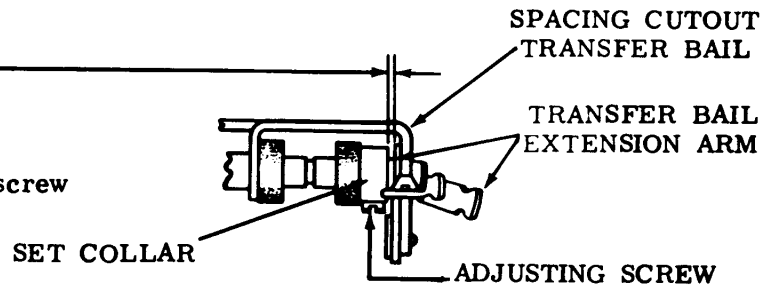

(Bottom View)

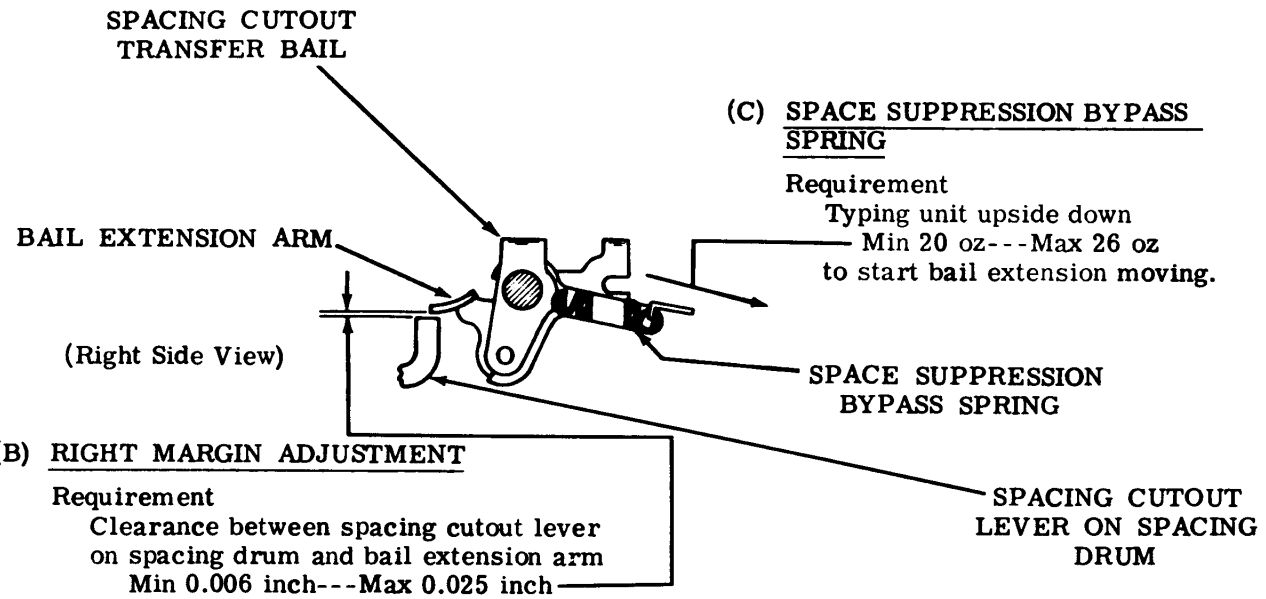

(Right Side View)

(C) SPACE SUPPRESSION BYPASS SPRING

Requirement
Typing unit upside down
Min 20 oz---Max 26 oz
to start bail extension moving.

(B) RIGHT MARGIN ADJUSTMENT

Requirement
Clearance between spacing cutout lever on spacing drum and bail extension arm
Min 0.006 inch---Max 0.025 inch

To Check
Place typebox in position to print character on which spacing cutout is desired. Pull forward on part of transfer bail extending below mounting shaft until bail is in fully operated position. Gauge clearance.

To Adjust
Position cutout lever with clamp screws loosened.

Note: Four screws must be loosened to adjust cutout lever (see figure in 2.56). Do not loosen hex head screw that clamps front ring.

3.18 Horizontal Tabulator Mechanism (continued)

TABULATOR PAWL (PRELIMINARY)

Note: Prior to adjustment, check LEFT MARGIN (2.55) and SPACING GEAR PHASING (2.29) adjustments.

(1) Requirement
Beginning with 15th slot (counterclockwise from roller on slotted ring), position tab stops approximately an equal number of slots apart over remaining length of printing line.

To Adjust
To move stops, hook small spring hook in hole of stop. Pull tab stop straight out from spacing drum and slide it on garter spring while continuing to pull it straight out. Spacing drum may have to be rotated manually to facilitate locating stops in some slots.

CAUTION: CHECK THAT ALL STOPS ARE FULLY SEATED IN SLOTS, AND NOT TURNED SIDEWAYS.

(2) Requirement
All clutches disengaged. Front spacing feed pawl in lower position, pawl adjusting plate should be positioned at center of vertical and horizontal adjustments.

To Adjust
Vertically position with both right and left screws loosened. Horizontally position with only left screw loosened. (Vertical adjustment is always made first.)

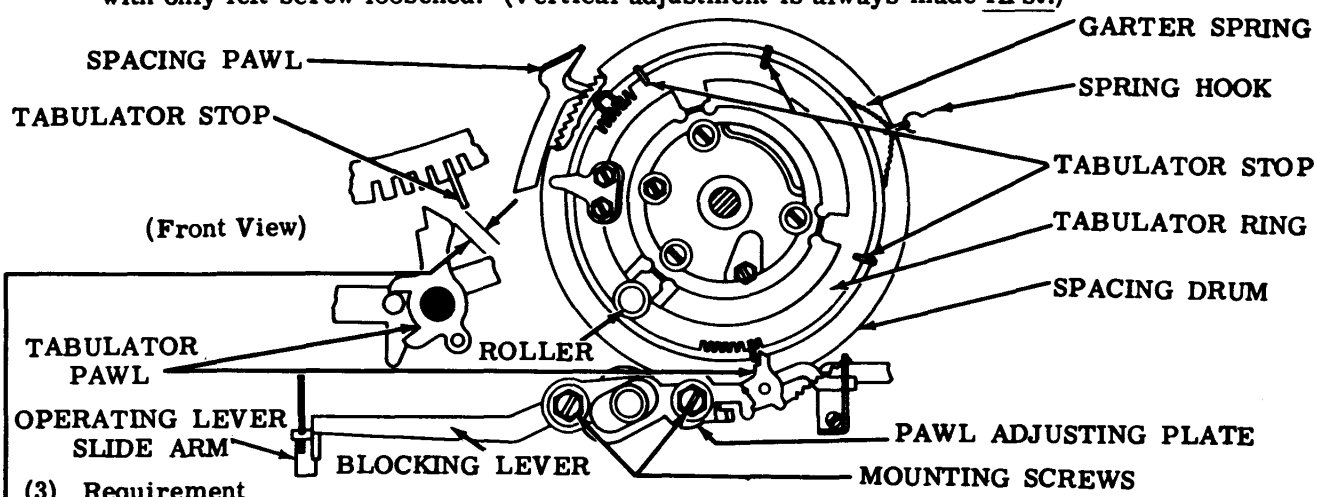

(3) Requirement
Disengage spacing feed pawls. Let spacing drum return to maximum counterclockwise position. Keep spacing clutch disengaged manually. Advance spacing drum until first stop is immediately left of pawl.

To Adjust
Adjust horizontal position of pawl adjusting plate so tabulator stop is in line with left edge of shoulder on pawl.

(4) Requirement
With blocking lever and operating lever extension link unblocked, disengage spacing feed pawls and let spacing drum move back exactly 2 full spaces. Both spacing feed pawls should be fully engaged.

To Adjust
With extension link blocked by blocking lever, gauge clearance between slope on pawl and tab stop. Note clearance. Advance drum until next stop is just left of tab pawl. Let spacing drum move back two full spaces. With extension link blocked by blocking lever, gauge and note clearance as before. Repeat procedure for remaining three stops. Note stop that gives maximum clearance. Use this stop as reference stop for final vertical and horizontal adjustments.

3.19 Horizontal Tabulator Mechanism (continued)

TABULATOR PAWL VERTICAL ADJUSTMENT (FINAL)

Requirement
Using stop with maximum clearance (determined by preliminary adjustment), position spacing drum until tab stop is opposite shoulder on tab pawl. With operating lever extension link blocked by blocking lever
Min 0.055 inch---Max 0.075 inch
clearance between tab stop and tab pawl.

To Adjust
Position pawl adjusting plate with both screws loosened. Tighten right screw only, using wrench to hold bushing from turning.

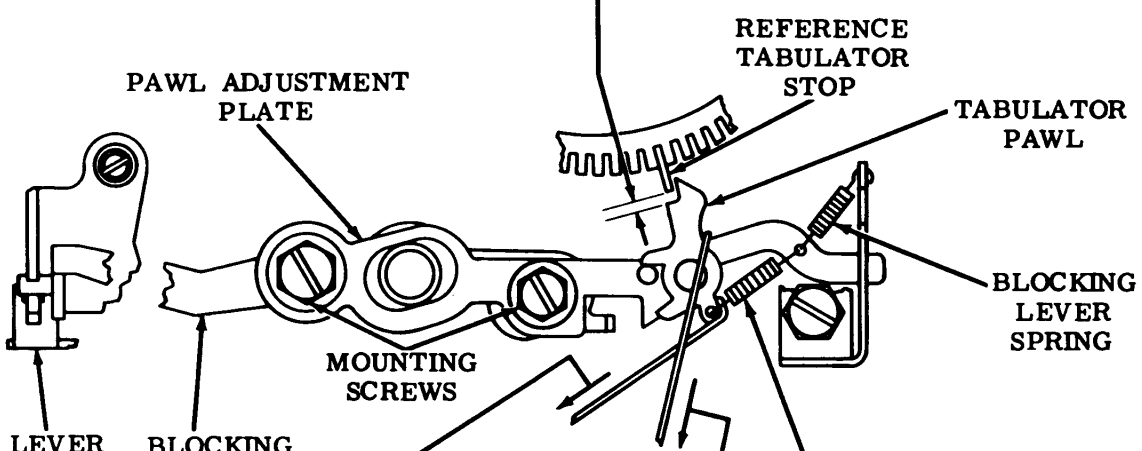

HORIZONTAL TAB PAWL SPRING

Requirement
Tab pawl unoperated
Min 3 oz---Max 5 oz
to start pawl moving.

HORIZONTAL TAB BLOCKING LEVER RETURN SPRING

Requirement
Operating lever slide arm held to rear
Min 2-1/2 oz---Max 4-1/2 oz
to start lever moving.

3.20 Horizontal Tabulator Mechanism (continued)

TABULATOR PAWL HORIZONTAL ADJUSTMENT

Requirement

All clutches disengaged. Front spacing feed pawl in lower position. Position spacing drum so tab stop with maximum clearance (as determined by preliminary adjustment) is immediately left of pawl. Operating lever extension link forward in unblocked position. Disengage feed pawls, let spacing drum move back one full space. Both feed pawls should be fully engaged. Pull back extension link to blocked position on blocking lever. Trip spacing clutch stop lever and slowly rotate main shaft and spacing clutch until blocking lever is just tripped, allowing extension link to move forward. At this point, some portion of clutch disc stop-lug should be aligned with rear surface of spacing shaft gear. Take up play in spacing shaft towards rear of unit.

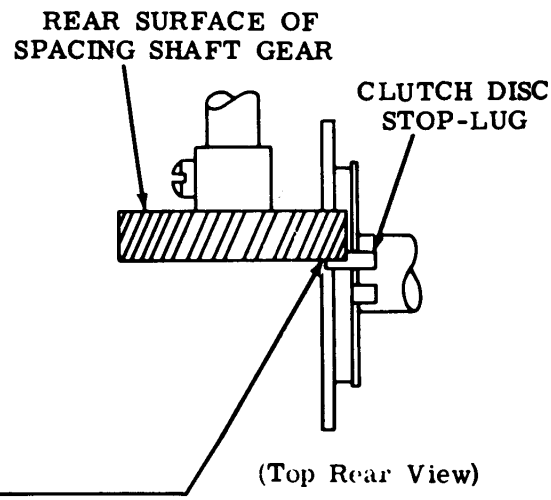

To Adjust

Trip spacing clutch and rotate clutch until middle of stop-lug is in line with rear surface of spacing shaft gear. If blocking lever trips too soon, first adjust the pawl adjusting plate to left until blocking lever can be placed in blocked position on extension link. Slowly move adjusting plate to right, with left screw loosened, until blocking lever just trips. When adjusting for trip-off point, take care that blocking lever is cammed down by tab stop and not pulled or pushed out of blocked position when prying adjusting plate. Recheck trip-off point against position of clutch stop-lug as before.

Note: After obtaining trip-off point of blocking lever, continue rotating spacing clutch to full stop position. Tab pawl should be right of tab stop. When extension link is moved to rear, blocking lever should move to blocked position. If tip of pawl should remain on end of tab stop, readjust pawl to right until there is

Min 0.003 inch---Max 0.008 inch

clearance between right surface on tab stop and left edge on pawl tip.

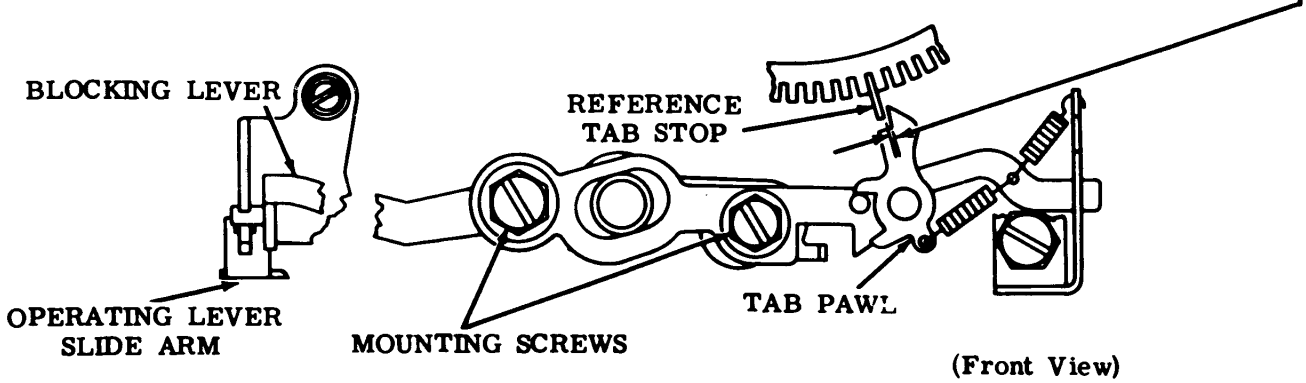

3.21 Horizontal Tabulator Mechanism (continued)

(C) RIGHT MARGIN TABULATOR STOP (WITH WIDE SHELF)

Requirement
Check right margin and tabulator pawl adjustments. Position printing carriage at right margin (spacing cutout operated). Insert stop with wide shelf in slot immediately to left of pawl. Shelf should extend to right so pawl rests on it.

(A) TABULATOR STOPS SETTING

Requirement
To move stops, hook small spring hook in hole in stop and pull straight out from drum. Slide stop on spring while continuing to pull out from drum. Position drum to facilitate moving stops.

CAUTION: CHECK TO INSURE THAT ALL STOPS ARE FULLY SEATED IN SLOTS, AND NOT TURNED SIDEWAYS.

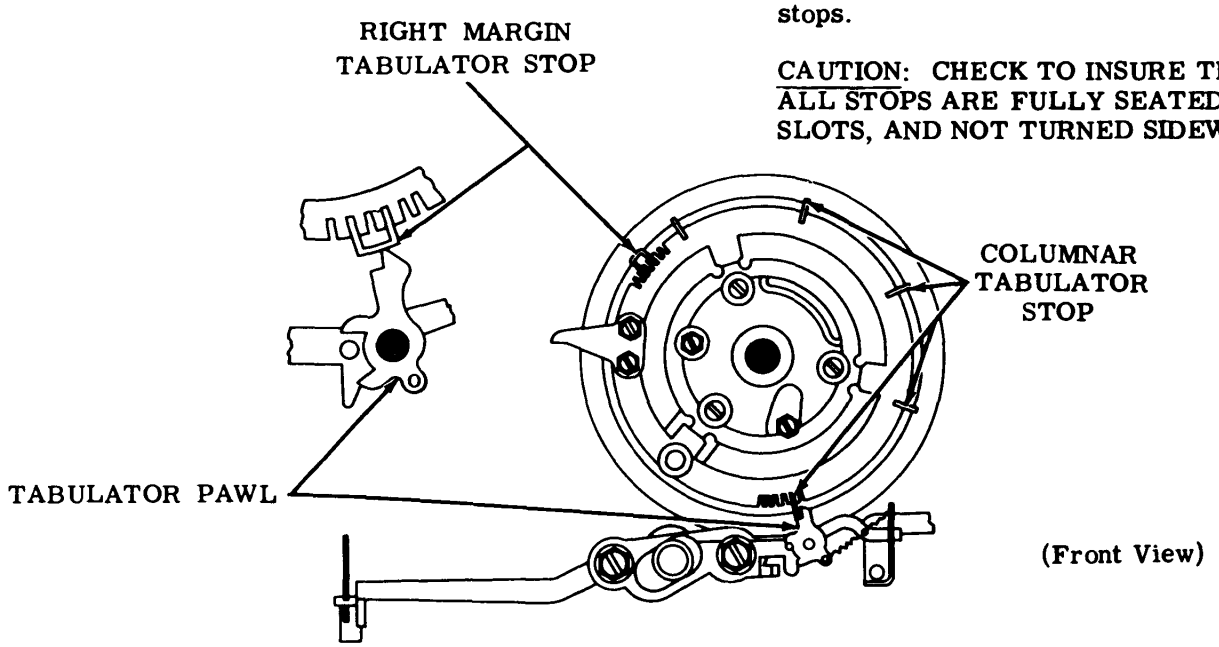

COLUMNAR TABULATOR STOPS

Requirement
Place carriage in position to print first character in column. Insert stop in slot immediately to left of tab pawl. To facilitate installation, mark desired slot position, rotate drum to a more accessible position. For slots near left margin, count number of space operations from left margin and place stop in corresponding slot number, beginning with slot no. 1 just to right of roller.

Note: When printing forms, check stop settings with relation to columns. Corresponding stops on all machines connected in a circuit must be same number of spacing operations from left margin.

3.22 Transmitter Distributor Transfer Control Contacts

(D) CONTACT ASSEMBLY BRACKET (PRELIMINARY)

Requirement (Not Illustrated)
Operating lever unoperated. Clearance between stud on operating lever and long contact spring
Min 0.020 inch---Max 0.025 inch

To Adjust
Position contact assembly bracket with mounting screws loosened. The bracket pivots about a pin at upper end of bracket.

(E) TRANSMITTER CONTROL CONTACT GAP

Requirement (Not Illustrated)
Operating lever in operated position.
Min 0.010 inch---Max 0.015 inch between normally closed contacts.

To Adjust
Bend stiffener.

(B) NORMALLY OPEN CONTACT SPRING

Requirement
Operating lever unoperated
Min 1 oz---Max 2 oz
to just move short contact spring away from stiffener.

To Adjust
Bend short contact spring.

(C) NORMALLY CLOSED CONTACT SPRING

Requirement
Operating lever operated.
Min 2 oz---Max 3 oz
to just move short contact spring away from stiffener.

To Adjust
Bend short contact spring.

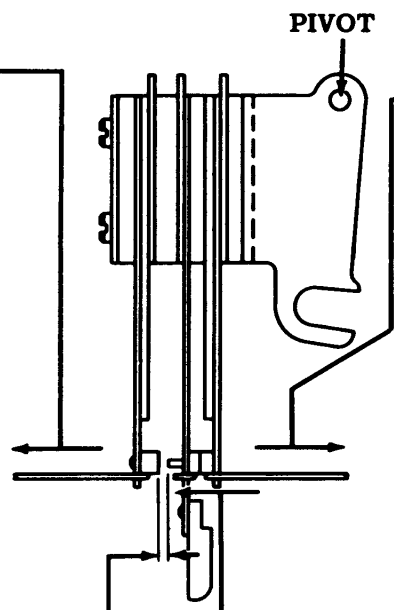

(F) NORMALLY OPEN CONTACT GAP

Requirement
Operating lever unoperated.
Min 0.010 inch---Max 0.015 inch between normally open contacts.

To Adjust
Bend stiffener.

(A) TRANSFER CONTACT SPRING

Requirement
Operating lever unoperated.
Min 2-1/2 oz---Max 3-1/2 oz
to just open contacts.

To Adjust
Bend long contact spring.

(G) CONTACT ASSEMBLY BRACKET (FINAL)

Requirement
Operating lever unoperated. There should be some clearance between stud on operating lever and long contact spring.

To Adjust
Remake adjustments (D), (E) and (F).

3.23 Transmitter Distributor Transfer Control Contacts (Later Design)

(A) TRANSFER CONTACT SPRING

Requirement
With the operating lever in the unoperated position, hook scale over the transfer contact swinger and pull at right angle to it.
Min 2 oz---Max 3 oz
to just open the contacts.

To Adjust
Bend the contact swinger spring.

(B) NORMALLY OPEN CONTACT SPRING

Requirement
With the operating lever in the unoperated position, hook scale over the short contact spring just above the contact point and pull at right angles to it.
Min 1 oz---Max 2 oz
to just move the short contact spring away from the stiffener.

To Adjust
Bend the short contact spring.

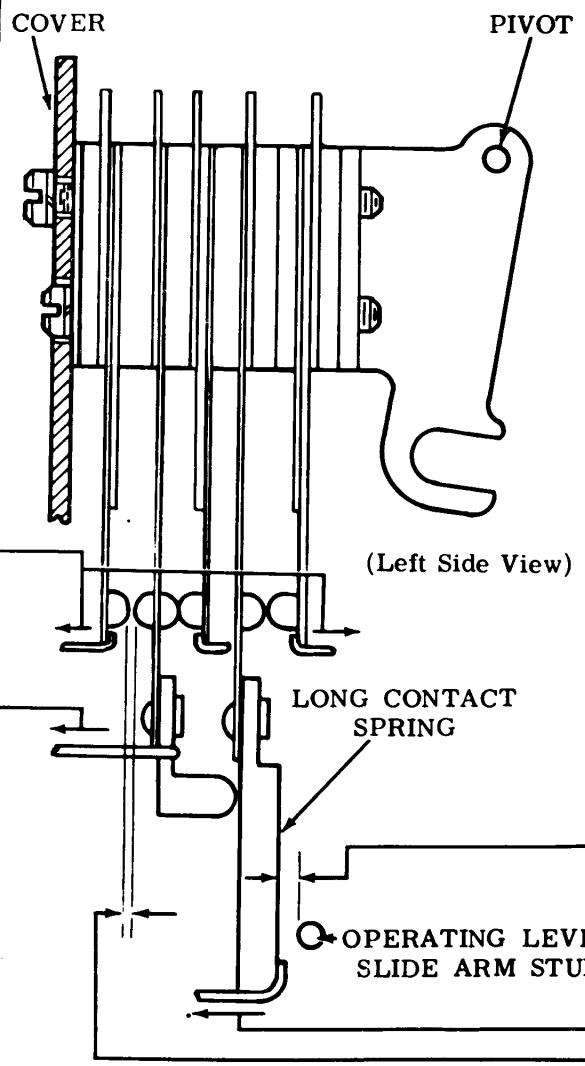

(C) CONTACT SPRING

Requirement
With the transfer contact swinger held away from the extension of the long contact spring, hook scale over the extension and pull at right angles to it.
Min 2 oz---Max 3 oz
to separate the contact points.

To Adjust
Bend the long contact spring.

(D) CONTACT ASSEMBLY BRACKET (PRELIMINARY)

Requirement
With the operating lever in the unoperated position, there should be
Min 0.020 inch---Max 0.025 inch
between the stud on the operating lever and the long contact spring.

To Adjust
Position the contact assembly bracket with the mounting screw loosened. The bracket pivots about a pin at the upper end of the bracket.

(E) NORMALLY OPEN CONTACT GAP

Requirement
With the operating lever in the unoperated position, there should be
Min. 0.010 inch---Max 0.015 inch
between the normally open contacts.

To Adjust
Bend the stiffener.

3.24 Transmitter Distributor Transfer Control Contacts (continued)

(A) TRANSMITTER CONTROL CONTACT GAP

Requirement
With the operating lever in the operated position, there should be Min 0.010 inch---Max 0.015 inch between the normally closed contacts.

To Adjust
Bend the stiffener.

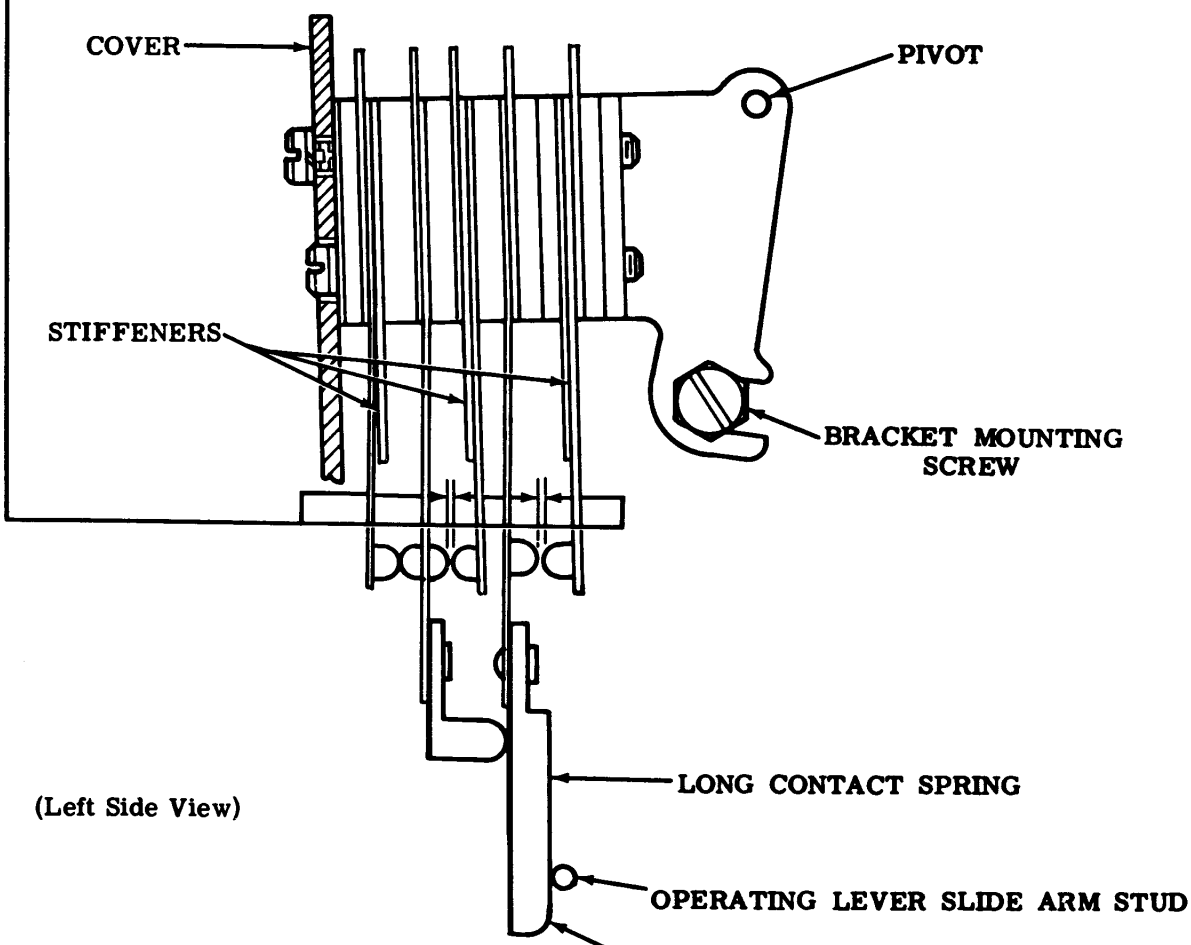

(Left Side View)

(B) CONTACT ASSEMBLY BRACKET (FINAL)

Requirement
With the operating lever in the unoperated position, there should be some clearance between the stud on the operating lever and the long contact spring.

To Adjust
Remake TRANSFER CONTACT SPRING (3.23) and TRANSMITTER CONTROL CONTACT GAP adjustments.

3.25 Keyboard Lock Mechanism

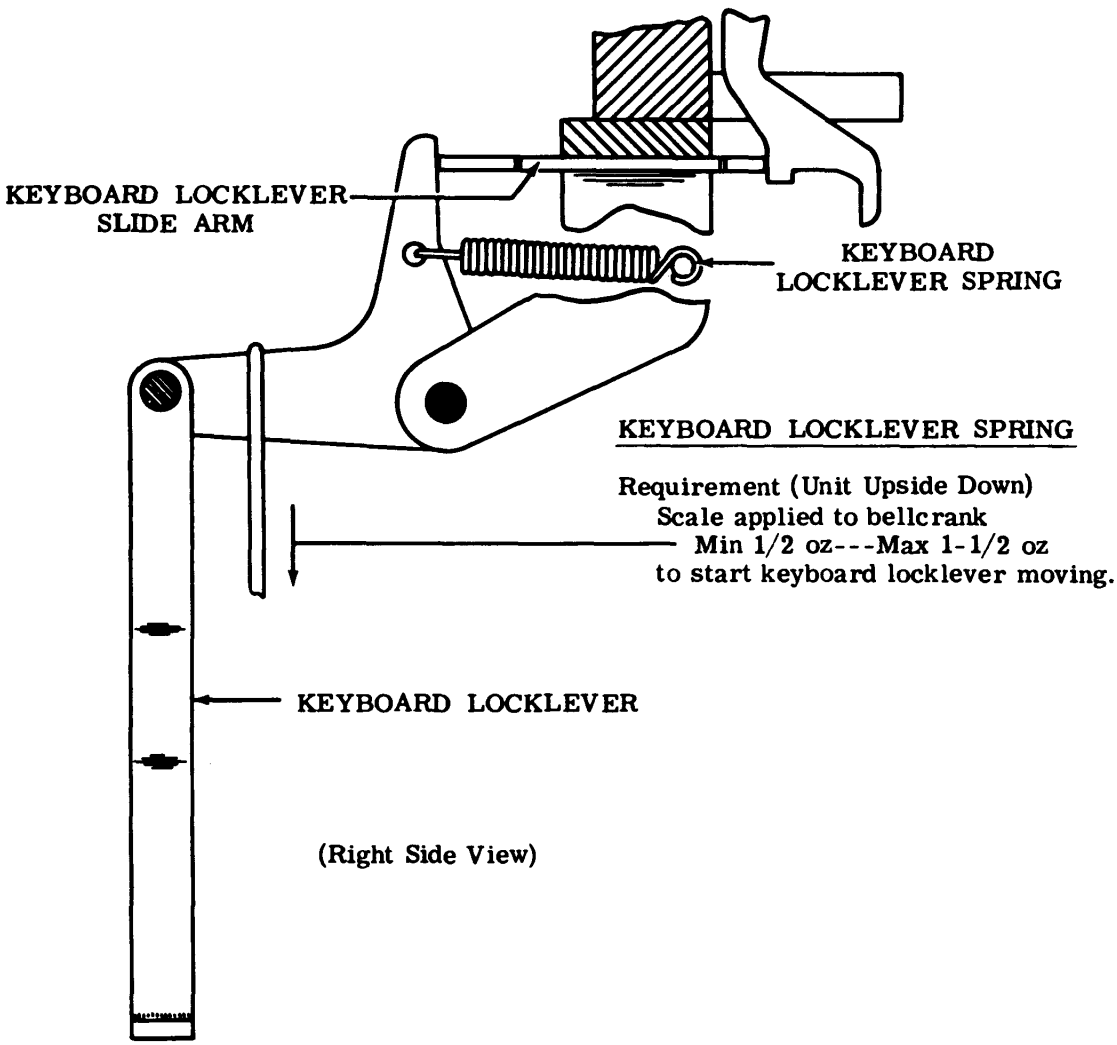

3.26 Local Backspace Mechanism

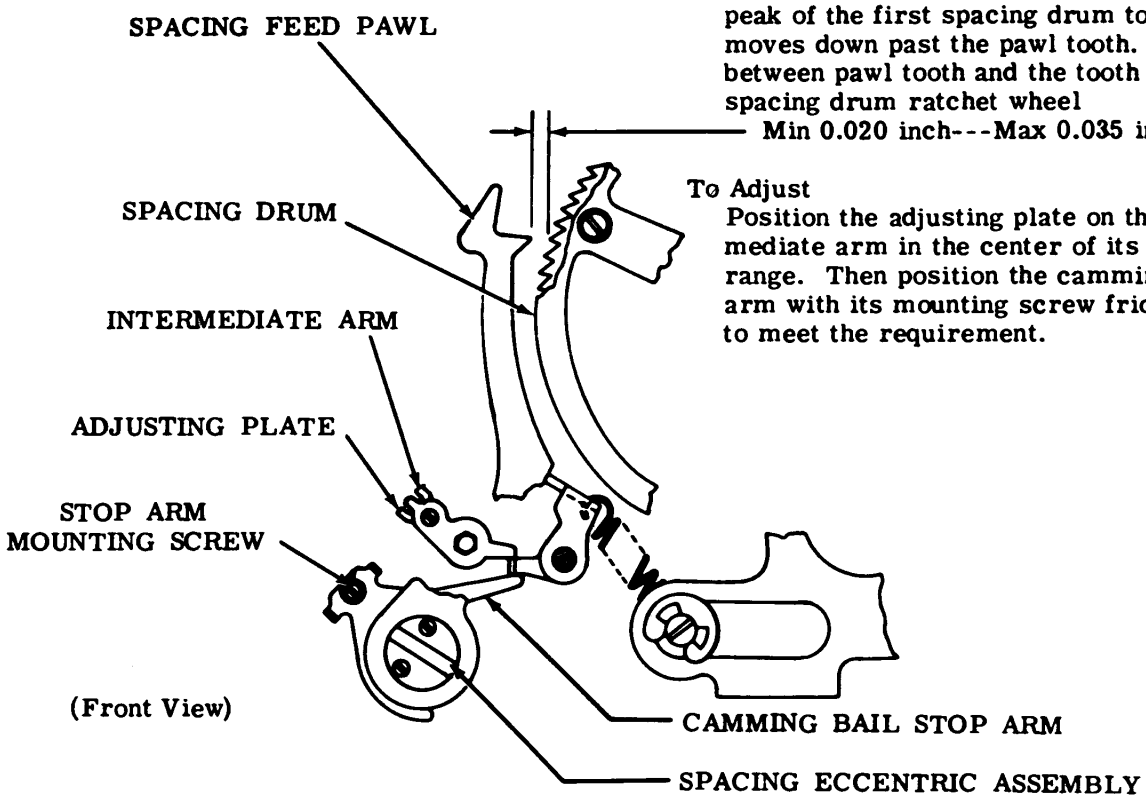

CAMMING BAIL STOP ARM

Requirement

Spacing clutch disengaged, front feed pawl in lower position, backspace bail held operated, clutch tripped and main shaft rotated until the front feed pawl tooth is opposite the peak of the first spacing drum tooth that moves down past the pawl tooth. Clearance between pawl tooth and the tooth on the spacing drum ratchet wheel

Min 0.020 inch---Max 0.035 inch

To Adjust

Position the adjusting plate on the intermediate arm in the center of its adjusting range. Then position the camming bail stop arm with its mounting screw friction tight to meet the requirement.

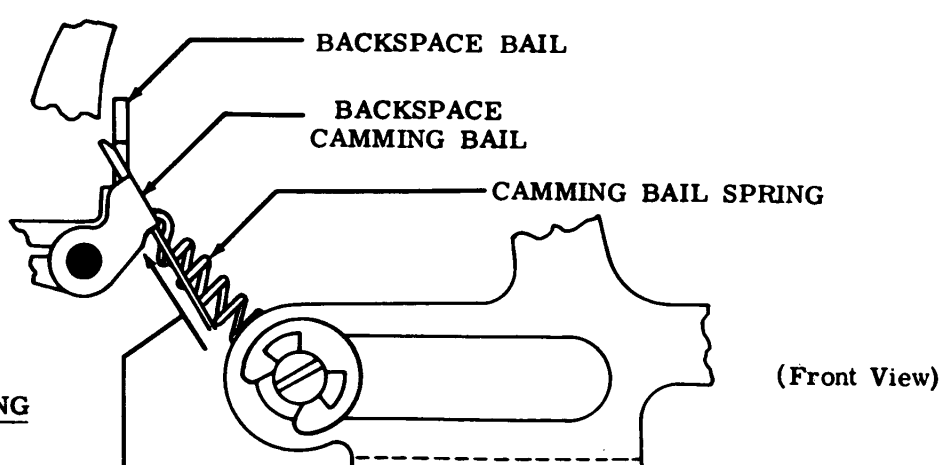

CAMMING BAIL SPRING

Requirement

Min 1 oz---Max 2-1/4 oz to start bail moving.

Note: See appropriate section for related keyboard adjustments.

3.27 Vertical Tabulator Mechanism

(C) FORM START GEAR PLAY

Requirement
Barely perceptible backlash between idler gear and form start gear.

To Adjust
Position gear pivot post with nut loosened.

Note: Gears should mesh accurately when checked at 3 equal distances around circumference of gear.

(E) INDEXING DISC

Requirement
Clearance between form-out stop plate and follower should be
Min 0.020 inch---Max 0.040 inch

To Check
Line feed clutch disengaged. Stop plate adjacent to follower. Slack in gears taken up to make gap a maximum.

To Adjust
Pull gear out of engagement with idler gear. Turn hand wheel clockwise until stop plate just operates the follower, then engage first tooth on idler. Position indexing disc with three mounting screws loosened.

(D) BLOCKING LEVER

See 3.28.

(A) VERTICAL TABULATOR SLIDE RETAINER

Requirement
Clearance between vertical tab slide and retaining edge of retainer should be
Min some---Max 0.012 inch

To Adjust
Position retainer forward and locate it up or down with mounting screws loosened.

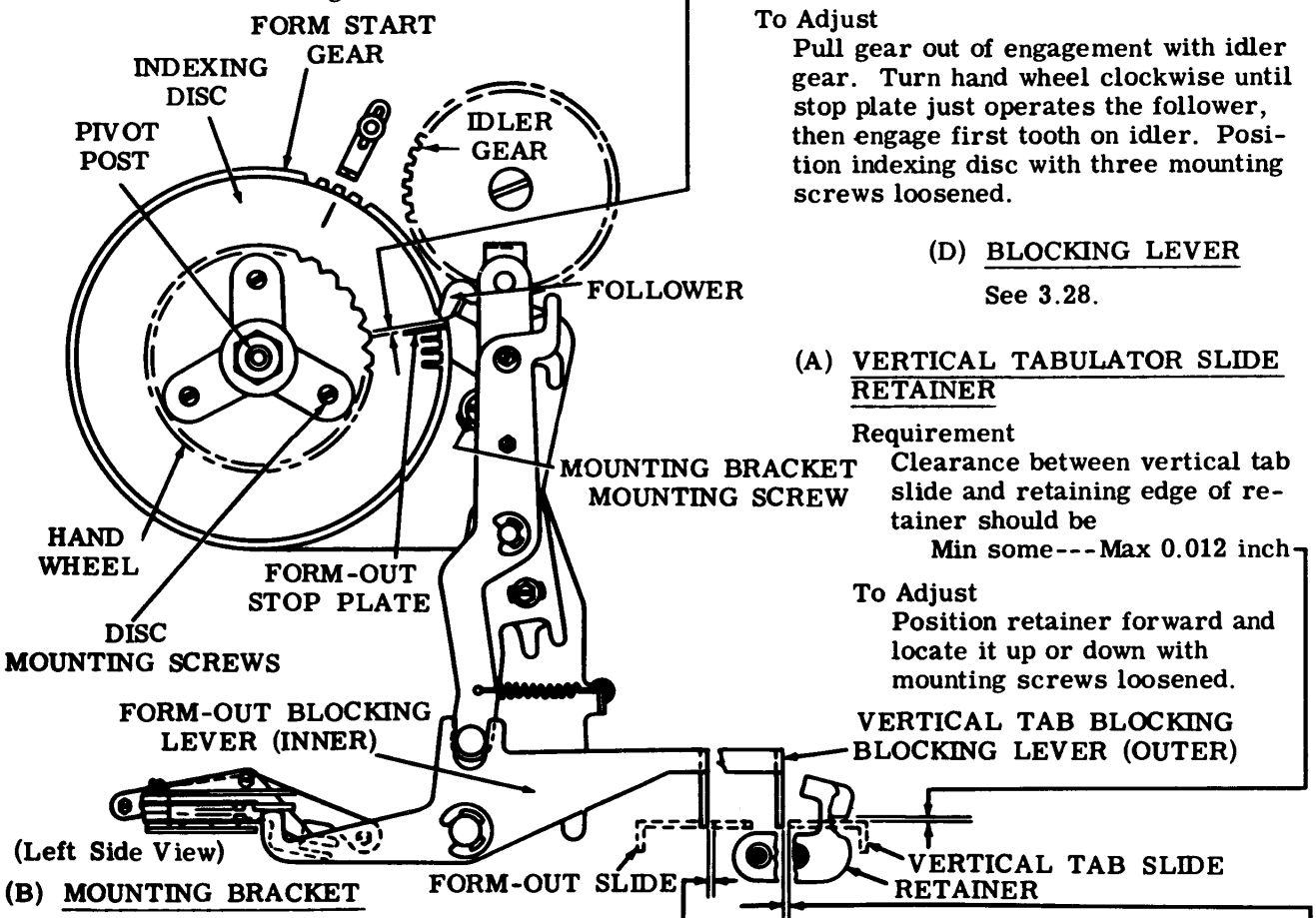

(B) MOUNTING BRACKET

(1) Requirement
Clearance between form-out blocking lever (inner lever) and form-out slide
Min some---Max 0.020 inch

To Check
Select upper case Z. Rotate main shaft until form-out slide is in most forward position. Take up play in form-out blocking lever to make clearance minimum.

(2) Requirement
Clearance between vertical tab slide and vertical tab blocking lever (outer lever)
Min 0.002 inch

To Check
Select upper case J. Rotate main shaft until vertical tab slide is in most forward position. Take up play in vertical tab blocking lever to make clearance minimum.

To Adjust
Position lower portion of mounting bracket with mounting screws loosened.

3.28 Vertical Tabulator Mechanism (continued)

(I) FORM-OUT STOP PLATE POSITION

Requirement

Place a form-out stop plate in the numbered slots on disc corresponding to length of page form to be used. Synchronize form-out device with a form by positioning form so that typing unit will print in first typing line of the form. When typing unit is in stop position, top of ribbon guide should align with bottom of printing line.

To Position

With page form in desired position, disengage form-stop gear from its idler gear. Rotate form-start gear until notch in indexing disc aligns with pointer on side of printer. Re-engage gears.

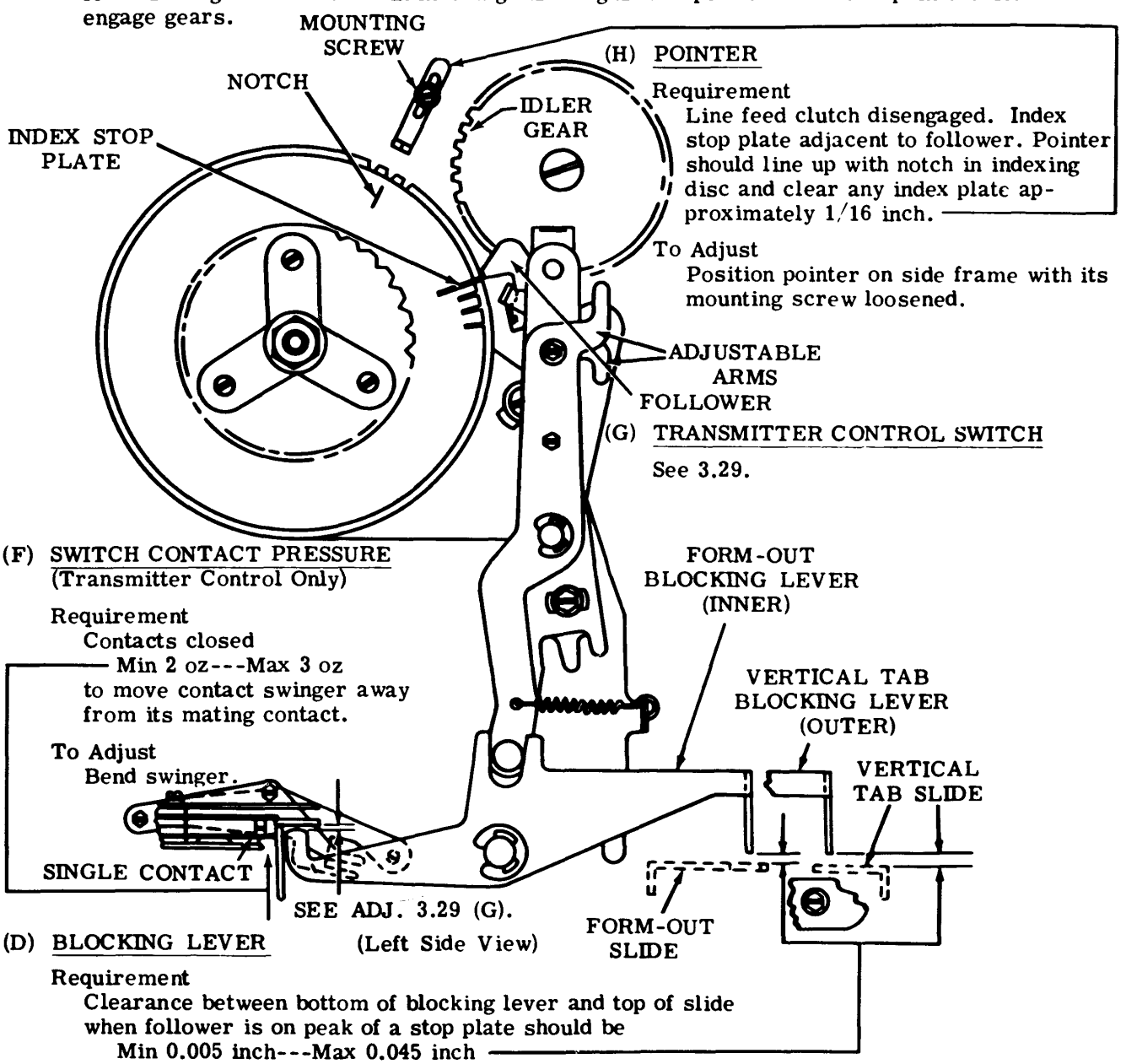

(H) POINTER

Requirement

Line feed clutch disengaged. Index stop plate adjacent to follower. Pointer should line up with notch in indexing disc and clear any index plate approximately 1/16 inch.

To Adjust

Position pointer on side frame with its mounting screw loosened.

(G) TRANSMITTER CONTROL SWITCH

See 3.29.

(F) SWITCH CONTACT PRESSURE
(Transmitter Control Only)

Requirement

Contacts closed

Min 2 oz---Max 3 oz

to move contact swinger away from its mating contact.

To Adjust

Bend swinger.

(D) BLOCKING LEVER

Requirement

Clearance between bottom of blocking lever and top of slide when follower is on peak of a stop plate should be

Min 0.005 inch---Max 0.045 inch

To Adjust

Trip line feed clutch. Rotate main shaft until follower is on peak of stop plate. Position adjustable arm with mounting screws loosened. Make adjustment for each blocking lever.

3.29 Vertical Tabulator Mechanism (continued)

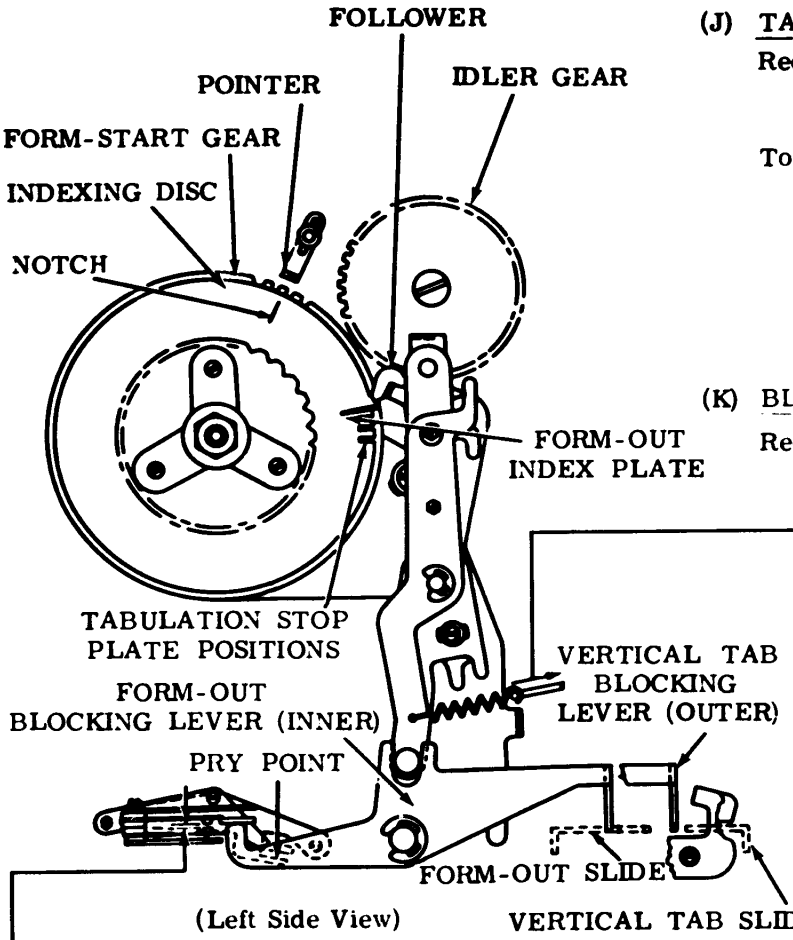

(J) TABULATION STOP PLATE POSITION

Requirement
With adjustment (I) met, line feed platen to desired first line of printing in that form.

To Position
Place tabulation stop plate in index disc slot to align with follower. Install additional tab stop plates at succeeding desired printing lines within the form. When tabulation at a given point is not needed, rotate tab stop plates on their sides.

(K) BLOCKING LEVER SPRING

Requirement
With spring unhooked and blocking lever on top of slide.
Min 9 oz---Max 11 oz
to pull respective spring to position length.

LINE FEED CLUTCH TRIP LEVER SPRING
See 2.23.

VERTICAL TAB BAIL SPRING
See 3.07.

FORM-OUT PAWL SPRING
See 3.07.

FUNCTION CONTACT SPRING
See 2.65.

(G) TRANSMITTER CONTROL SWITCH (SINGLE CONTACT TYPE)

(1) Requirement
With control contacts open clearance between contacts should be
Min 0.010 inch---Max 0.020 inch

To Check
Select form-out code. Rotate main shaft until form-out slide is in most forward position and form-out blocking lever drops behind its slide.

(2) Requirement
Same as Requirement (1)

To Check
Select vertical tab code. Rotate main shaft until vertical tab slide is in most forward position and vertical tab blocking lever drops behind its slide.

(3) Requirement
With transmitter control contacts closed, there should be some clearance between insulator tip of swinger and lobes of both form-out and vertical tab blocking levers. (See figure in 3.28.)

To Check
Rotate main shaft until both form-out and vertical tab blocking levers are resting on top of slides.

To Adjust
Position switch assembly at pry point with center mounting screw loosened.

3.30 Transmitter Control Contacts (Later Design)

(A) SWITCH CONTACT PRESSURE

Requirement

With the break (lower) contacts closed and the make contacts open, it should require

Min 8 grams---Max 15 grams

to move the contact swinger away from its mating break contact.

To Adjust

Bend the swinger until the requirement is met.

(B) NORMALLY OPEN CONTACT GAP

Requirement

The contact gap between the swinger and the make (upper) contact should be

Min 0.008 inch---Max 0.020 inch

To Adjust

Bend the make contact spring until the requirement is met.

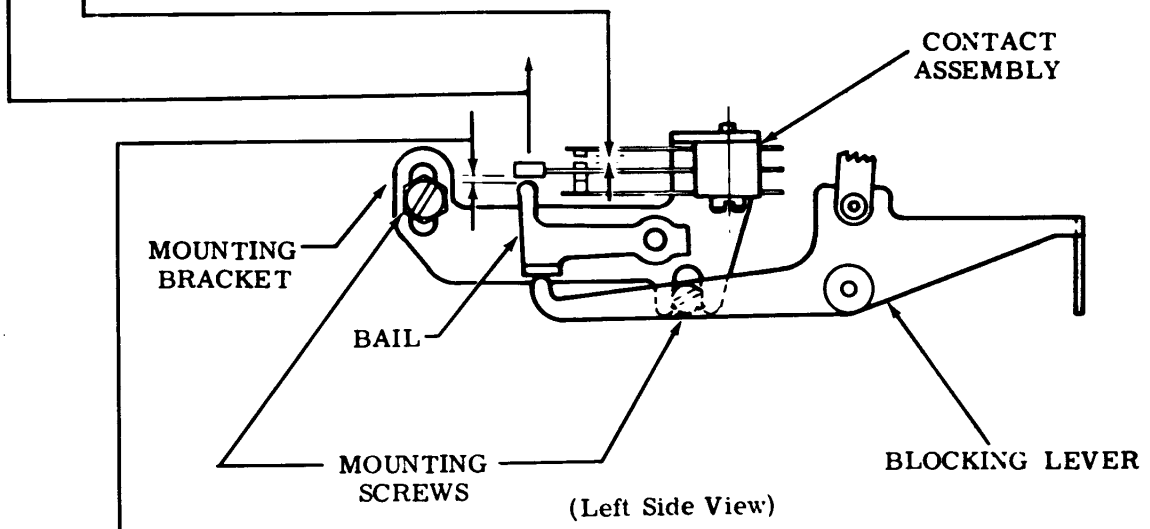

(Left Side View)

(C) CONTACT BRACKET

Requirement

Rotate the main shaft until both the form-out and vertical tab blocking levers are unoperated (resting on top of the slides). The transmitter control contacts (lower set) should be closed and there should be

Min some---Max 0.015 inch

between the insulator pad of the swinger and the lobe of the bail.

To Adjust

With mounting screws friction tight, position mounting bracket. Tighten screws.

3.31 Upper Solenoid (For Applicable Units)

UPPER SOLENOID

Requirement

With the solenoid held in the energized condition, position the solenoid so that there is

Min 0.060 inch---Max 0.080 inch

between the solenoid bail stop and the codebar detent housing.

Note: Take up play in bail to the left to make this clearance a maximum.

To Adjust

Loosen the two solenoid adjusting screws and position the solenoid to meet the requirement.

To Check

Apply 110 volts ac to the solenoid. If the solenoid buzzes, the suppression bar is stopped before the solenoid is in its proper energized condition. Refine above.

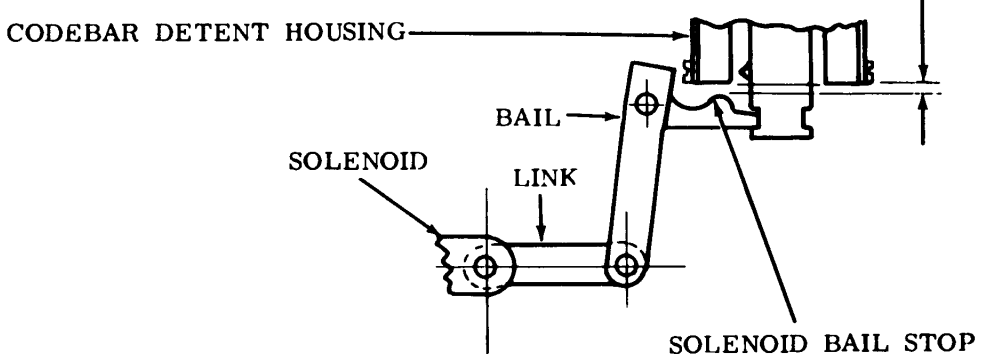

(Top View)

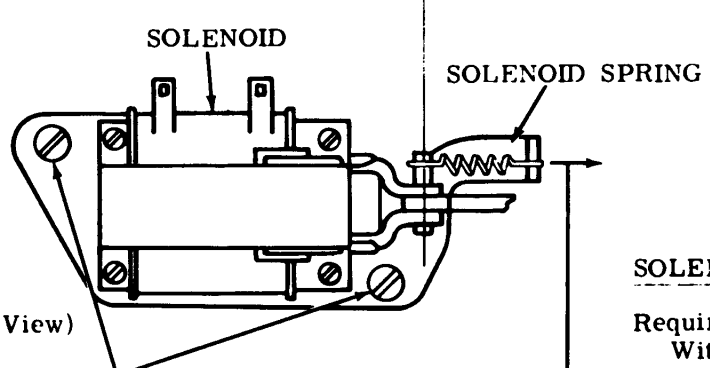

(Left Side View)

SOLENOID SPRING

Requirement

With the solenoid in the de-energized condition, unhook the front end of the spring. To pull spring to installed length

Min 2 oz---Max 3 oz

3.32 Lower Solenoid (For Applicable Units)

LOWER SOLENOID

Requirement
With the solenoid in the de-energized condition there should be
Min 0.030 inch---Max 0.070 inch
between the clutch suppression arm and the end of the solenoic lever.

To Adjust
Loosen the two solenoid adjusting screws and position the solenoid to the requirement.

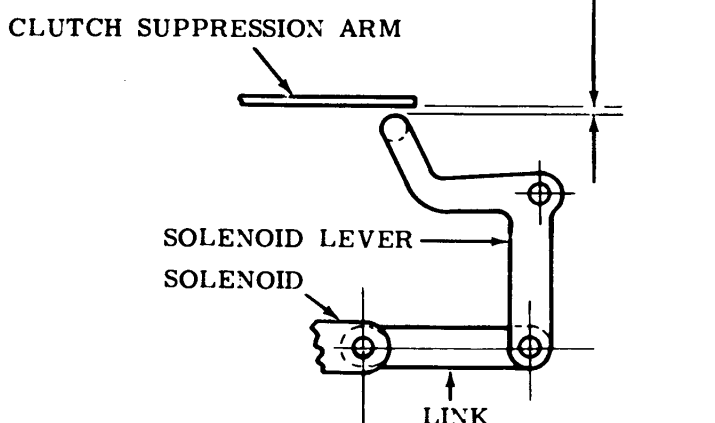

(Top View)

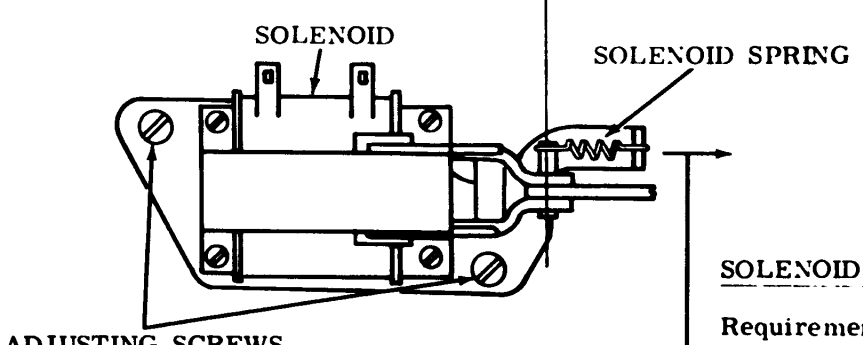

(Right Side View)

SOLENOID SPRING

Requirement
With the solenoid in the de-energized condition unhook the front end of the spring. Pull spring to installed length.
Min 2 oz---Max 3 oz

To Adjust
Replace the spring.

3.33 Print-Nonprint Solenoid Mechanism

(A) SOLENOID PLUNGER

(1) Requirement

With the solenoid plunger held against the stop inside of the solenoid, the outer edge of the end of the suppression codebar should line up with the outer edge of the end of spacing no. 2 codebar. Also, when the suppression codebar is spacing, the tines of the suppression bar should line up with the tines of the no. 2 codebar. Verically align either point by eye.

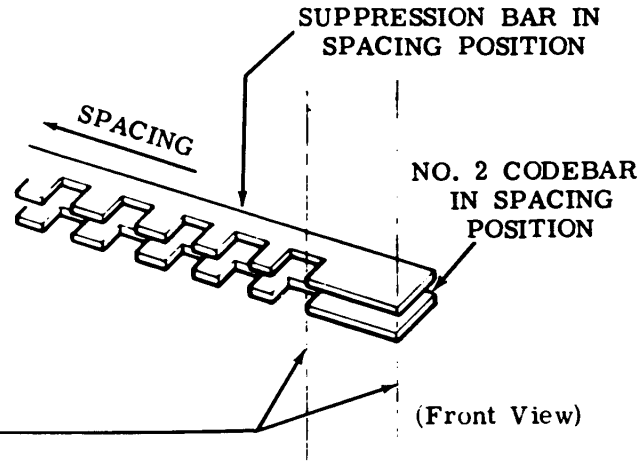

To Adjust

Loosen the solenoid mounting screws and move the solenoid forward or backward to meet both of these requirements. Check outer edges of the bars and the tine line-up by eye. Check tines by sighting over and through stunt box at rear of unit. Recheck requirement. Tighten screws.

(2) Requirement

With 48 v dc applied to the solenoid, recheck Requirement (1); the suppression codebar should not overtravel when the solenoid is energized.

To Adjust

Same as above.

(B) SOLENOID CONTACT

Requirement

With the solenoid de-energized and the plunger in the unoperated position there should be Min 0.010 inch---Max 0.020 inch gap between the contacts.

Note: Open up the contact cover to measure gap and to facilitate the following adjustments.

To Adjust

Bend the contact springs to gain the requirement.

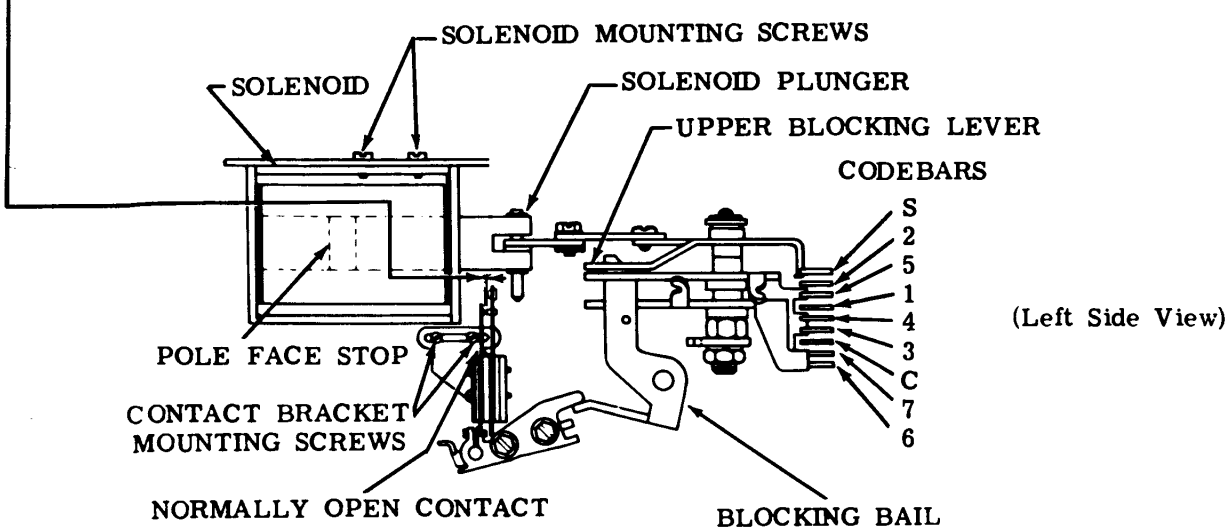

3.34 Print-Nonprint Solenoid Mechanism (continued)

SUPPRESSION BAR RETURN SPRING (FOR UNITS EMPLOYING THE PRINT SUPPRESS SOLENOID MECHANISM)

Requirement

With the solenoid de-energized and suppression bar moved to the left, push against the left end of the bar and parallel to the bar. All bearing points in solenoid linkage must be free of binds.

Min 2-1/2 oz---Max 4-1/2 oz to start the bar moving to the right.

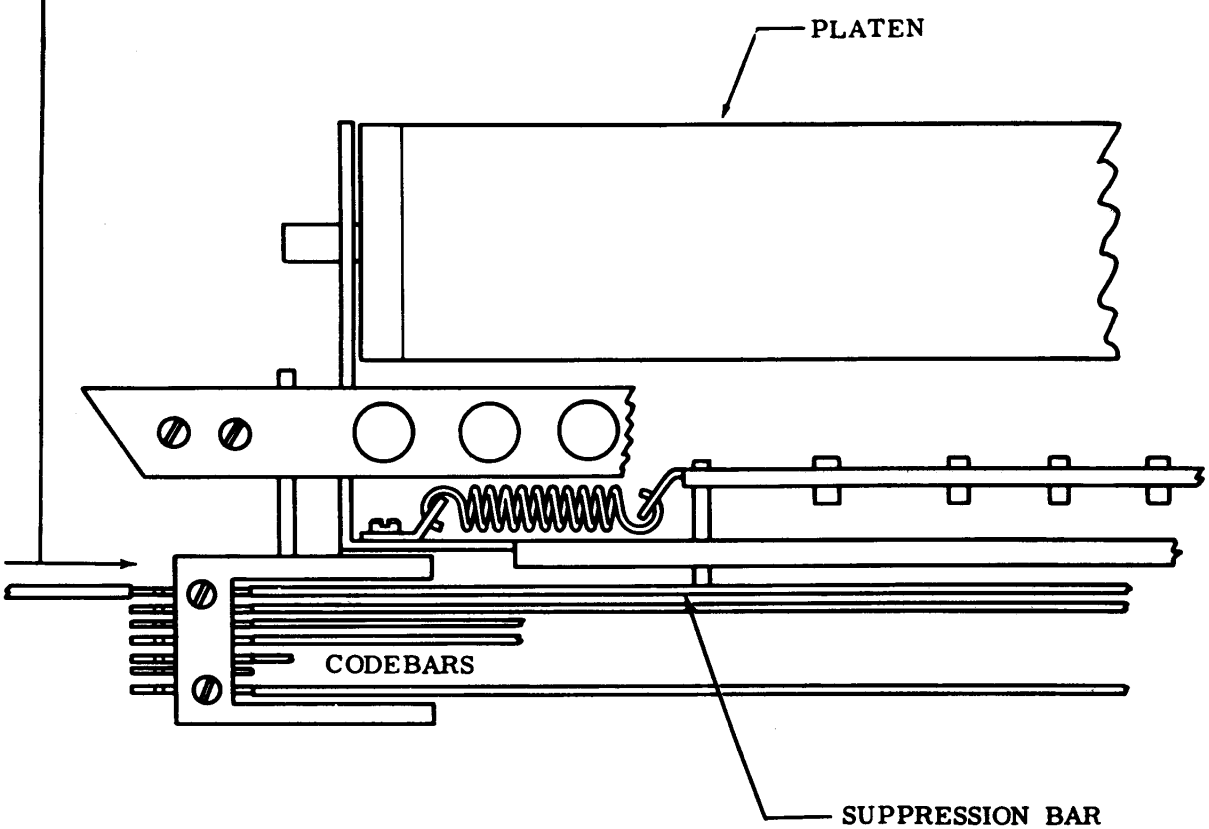

(Front View of Printer)

3.35 Print-Nonprint Solenoid Mechanism (continued)

SOLENOID ENERGIZED

Requirement

With the solenoid plunger held against the solenoid pole face stop, the solenoid pin should operate the contact swinger and close the contacts. It should require a force of at least

Min 2 oz

to separate the contacts.

To Adjust

Loosen the contact bracket mounting screws and position the bracket so that the solenoid pin strikes the contact button just before the end of the plunger travel. Tighten screws. Bend the stationary contact to meet the requirement. Recheck requirement and then close contact cover.

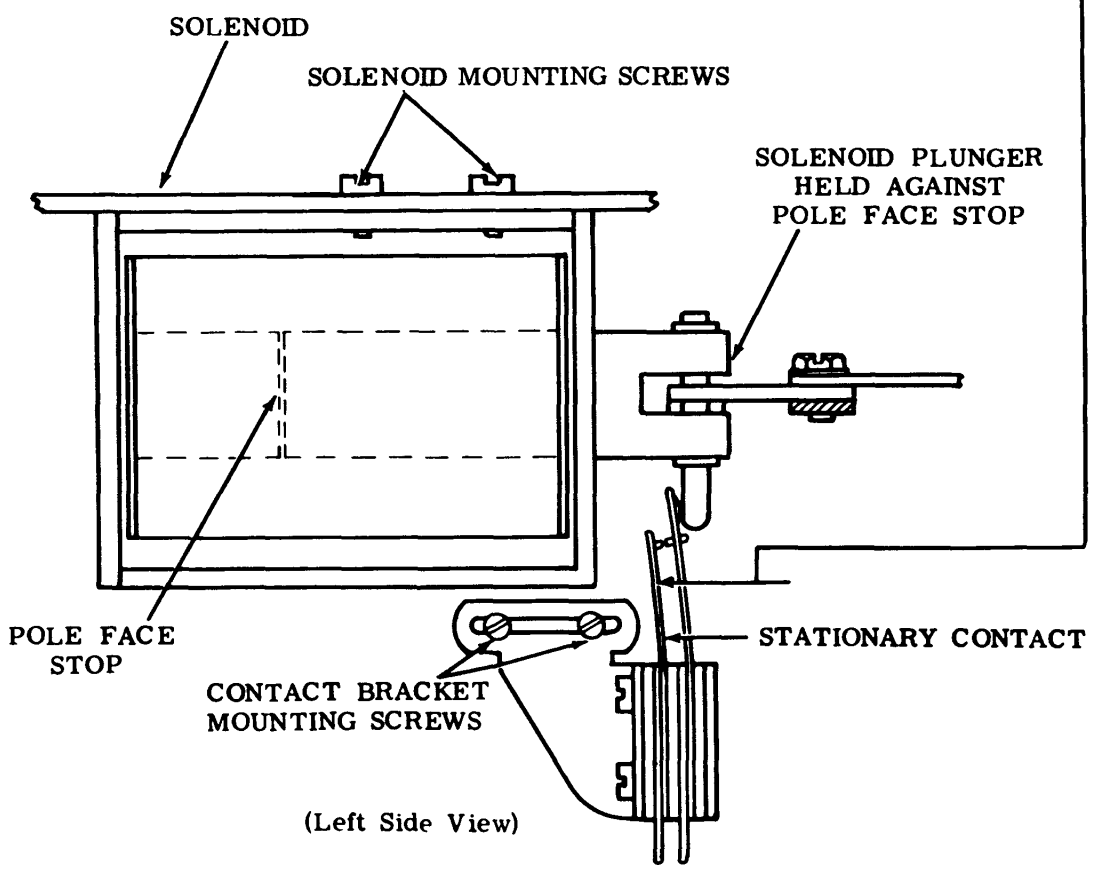

3.36 Print-Nonprint Solenoid Mechanism (continued)

SOLENOID DE-ENERGIZED (SUPPRESSION CODEBAR MARKING)

(1) Requirement
When the solenoid de-energizes, the plunger should travel no more than
Max 1/8 inch
away from the solenoid pole face.

To Adjust
Loosen nut and adjust stop bracket against link. Vertically align suppression codebar with other codebars by eye. Solenoid travel should not exceed
Max 1/8 inch
Tighten nut.

(2) Requirement
All pivot points on the solenoid linkage must be free of binds. With the solenoid plunger in its unoperated position, a force of no more than
Max 1-1/4 oz
applied to the end of the plunger should move the plunger when the suppression bar return spring is removed.

To Adjust
Inspect all pivot points for binds.

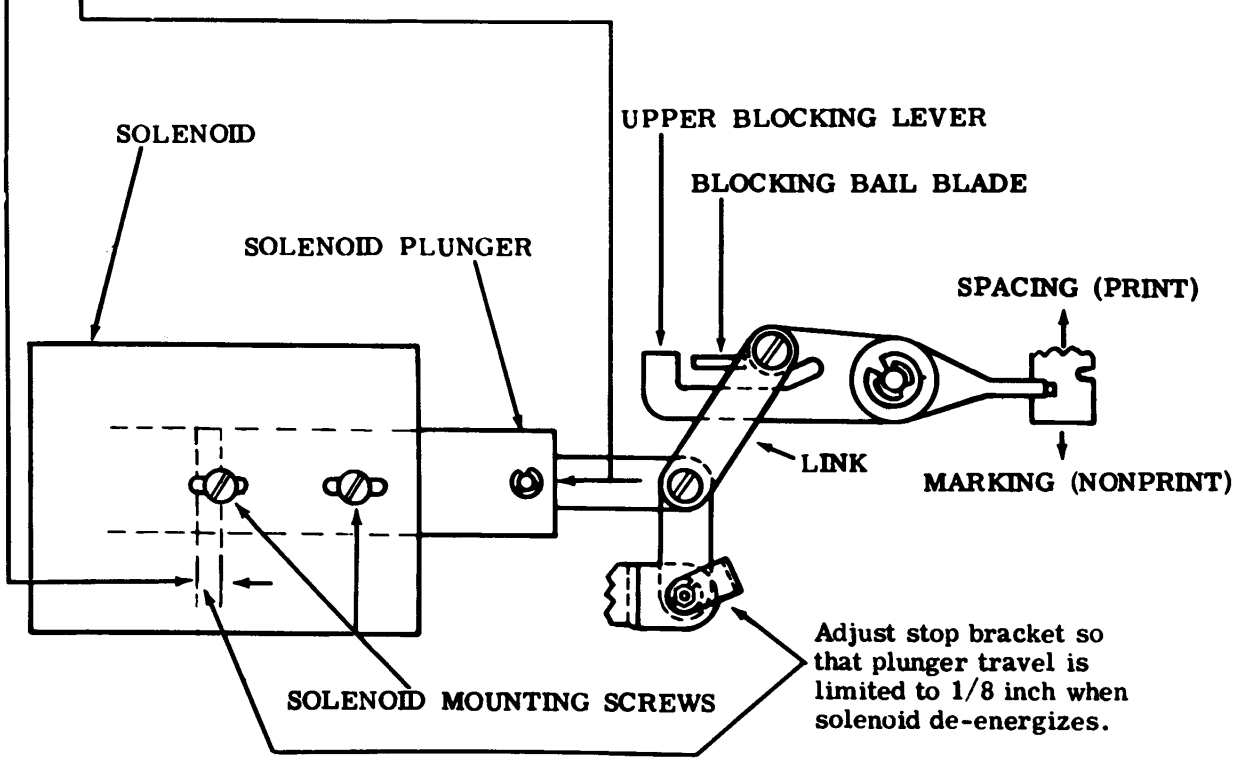

(Top View)

3.37 Print-Nonprint Solenoid Mechanism (continued)

CONTACT BUTTON AND SOLENOID PIN ALIGNMENT

Requirement

The swinger contact button and the solenoid plunger pin should be aligned by eye such that the pin strikes the flat surface of the button.

To Adjust

Loosen the contact pile-up mounting screws and move the contacts left or right to gain the alignment of button and pin. Check to see that the contact points mate fully.

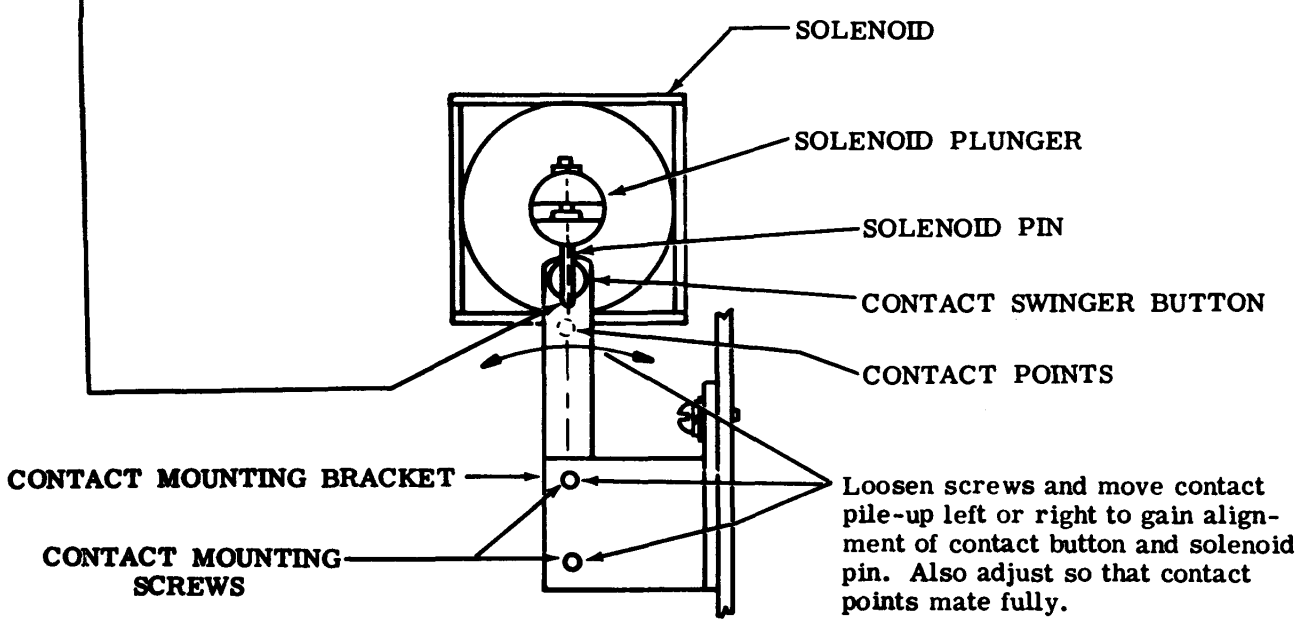

(Front View)

3.38 Timing Contact Mechanism (Operated by Selector)

Note 1: In this text, the letters S, B, and M are used to denote respectively the "swinger", "break" (normally closed with lever riding cam depression) and "make" (normally open; closed only with lever riding cam peak) contact springs.

Note 2: When making adjustments (F) through (H) make certain the "S" spring insulator is clear of the operating lever.

Note 3: Parts should be well aligned and free of sharp bends. Contact points misalignment should not exceed 1/4 the diameter of points.

(A) "M" CONTACT SPRINGS

Requirement
Min 4 oz
to move contact spring away from its stiffener.

To Adjust
Bend contact spring.

(B) "B" CONTACT SPRINGS

Requirement
Min 4 oz
to move contact spring away from its stiffener.

To Adjust
Bend contact spring.

(C) "S" - "B" CONTACT SPRINGS

Requirement
Min 3-1/2 oz---Max 4-1/4 oz
to move swinger contact away from normally break contact.

To Adjust
Bend swinger contact spring.

(E) "S" - "M" CONTACT GAP

Requirement
Min 0.012 inch---Max 0.020 inch

To Adjust
Bend stiffener.

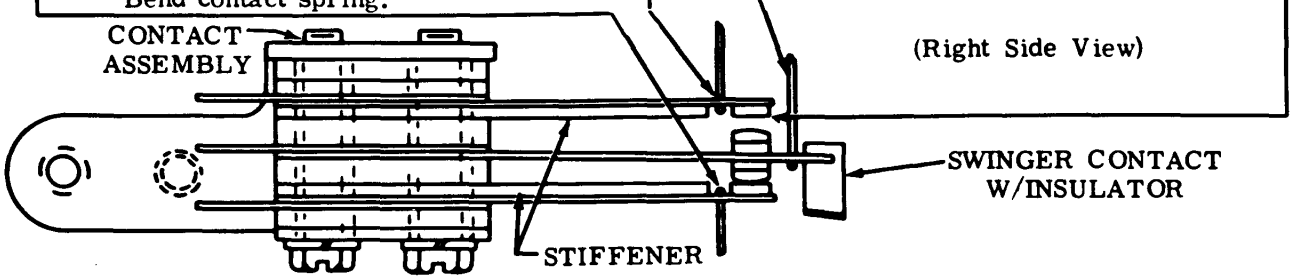

(D) TWIN "B" CONTACT SPRINGS

(1) Requirement
Both contacts should open at the same time.

(2) Requirement
The insertion of an 0.008 inch gauge between one pair of points should not cause the other pair to separate.

To Adjust
Bend springs or slightly twist stiffener. Recheck contact pressure.

(F) TWIN SPRINGS ("M" CONTACTS)

Requirement
Both make and swinger contacts should make approximately the same time (within 0.006 inch as gauged by eye).

To Adjust
Bend make contact springs or slightly twist stiffener.

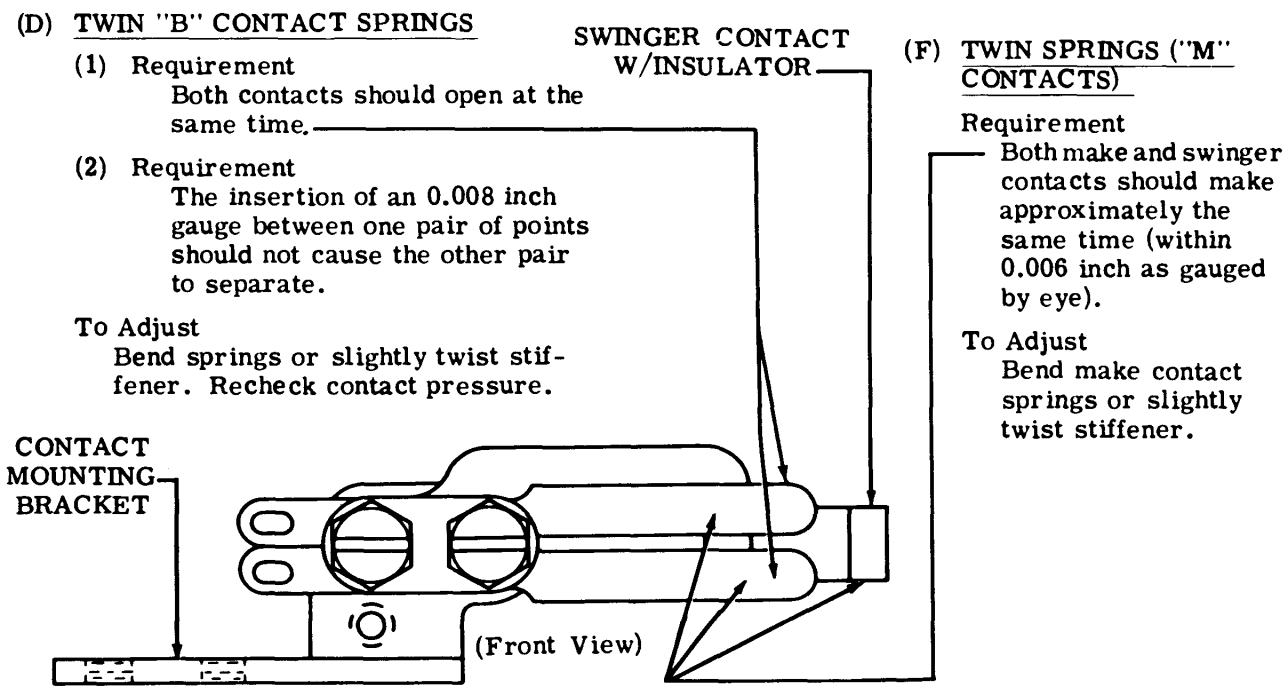

3.39 Timing Contact Mechanism (Operated by Selector) (continued)

(H) CONTACT ASSEMBLY POSITION

(1) Requirement
Set range scale at 50 (important). Rotate shaft so operating lever is on lowest part of cam.

To Adjust
With mounting screws loosened position contact assembly by means of its oversize mounting holes so lever can be moved
Min 0.002 inch---Max 0.006 inch
before it touches the swinger spring, and so first touch is on lower half of spring stud wearing plate.

(2) Requirement
(At higher settings, movement will be larger: disregard.) Tighten screws and recheck. Rotate shaft and note the high part of cam causes both "M" contacts to move at least
Min 0.012 inch
If this contact movement is not met at setting 60 and 90, check for insecure parts and refine contact gap between swinger and make contact. If still not met, replace range scale sector rack.

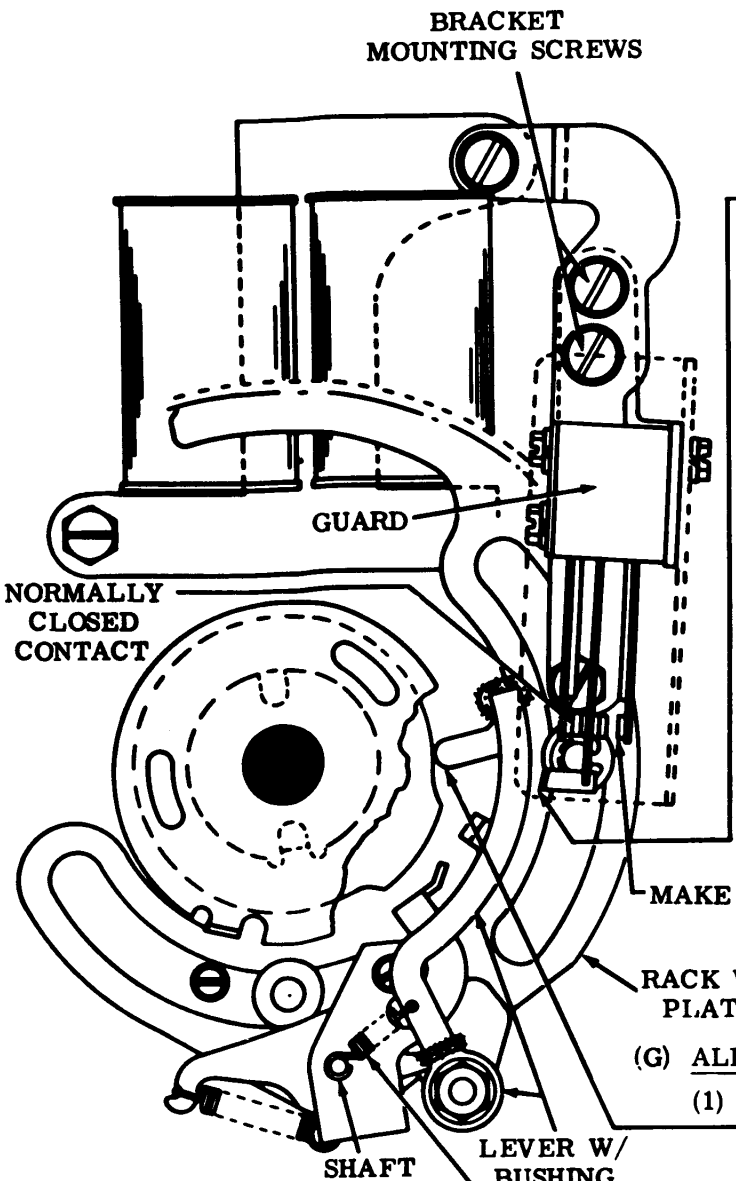

(Right Side View)

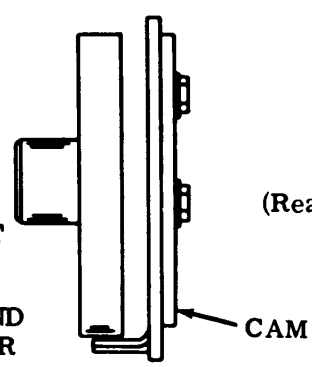

(Rear View)

(G) ALIGNMENT OF OPERATING LEVER WITH CAM

(1) Requirement
Operating lever's full thickness should ride cam.

To Check
Take up all cam endplay toward selector to clutch drum, all operating lever endplay (at its bearing) in opposite direction. Observe lever and cam for full engagement.

(2) Requirement
Lever should not exert pressure against face of clutch disc.

To Adjust
Refine clutch drum endplay.

(I) OPERATING LEVER SPRING

Requirement
The spring should hold operating lever against cam with light pressure. With spring removed
Min 2 oz---Max 3 oz
to stretch spring to 5/8 inch length.

3.40 Timing Contact Mechanism (Operated by Selector) (continued)

(A) TIMING VERIFICATION, 11.00 UNIT CODE

Note 1: DXD means distortion test set.

Note 2: Requirements (1) or (2), below, may be omitted if the stroboscopic tests of Requirement (3) are to be made.

(1) Requirement
TP174451 Cam: With range scale at 45, manually rotate main shaft with selector armature spacing. The M contacts should close soon after, but not before, the locklever blocks the selector armature after the no. 8 selection. Continue rotation into the next cycle. With the selector armature marking, note that the M contacts again close and that they open and the B contacts close before the selector clutch slips (it may not latch because of the slow rotation).

(2) Requirement
TP174450 Cam: With range scale at 90 and the selector marking, rotate the shaft and latch the clutch. The M contacts should be closed. Trip the clutch and slowly rotate the shaft. The B contacts close after rotation starts. Repeat at range setting 45.

(3) Requirement
Stroboscopic Tests: Connect the B-S or S-M terminals (as required into a 120 v dc viewing circuit of 11.00 unit DXD or similar stroboscopic test set, 600 opm. Connect the DXD test message output or a comparable signal source in a line circuit to the selector magnets. Set distortion at zero. Synchronize the viewing scale with the transmitted signals. Observe DXD stroboscopic display of signals listed below. Ignore rhythmic shifting of a signal. This shifting occurs because of slight rotational displacement of the motor armature (and of the selector cam) as it encounters loads such as line feed, etc, from one printer cycle to the next. The shifting is exhibited as lighter colored display at the beginning or end of a signal. True readings are at the observed midpoints of shifting areas. If any shift area should be excessive, say over 18 DXD divisions total, it may be indication of binds, slippages, or wear in the machine. Signals should be clear of gaps (except see ++ below) (indicate dirt, chatter, or bounce) after the first ten DXD divisions of closure. Where only one range setting is specified, it indicates that tests at that setting are sufficient to verify performance at other settings.

3.41 Timing Contact Mechanism (Operated by Selector) (continued)

Test Conditions		Signal Length in Viewed DXD Divisions	
Cam	Contact Pair	Message Stopped, Marking	Message Running
TP174451	S-M	Dark at range 45	Min 104 at range 90. Begins after 11 of beginning of stop pulse, ends before 148 of stop pulse.
	B-S	1100 at range 45	++890-979
TP174450	S-M	1100 at range 45 & 90	++ Min 148 at range 90. Begins in stop pulse, ends before 48 of #1 pulse.
	B-2	Dark at range 45	++845-948

++While viewing DXD, slowly move range scale from 90 to 45. If, at some setting there is within the signal a gap, it should not exceed 8 DXD divisions.

(B) CORRECTION OF TIMING

Check for the following:

(1) Wrong cam

(2) Range scale knob maladjusted

(3) Contact, lever, and bracket adjustments. Refine if required.

(4) Parts loose

(5) Contacts dirty

(6) Improper test connections

(7) Improper synchronism of sending and stroboscopic portions of test set. Note that test message is to be sent direct to selector magnets. Introduction of a line relay, contact protection network, or any other condition affecting magnet release time will displace the viewed signals produced by the modification kits.

3.42 Two Color Ribbon Mechanism

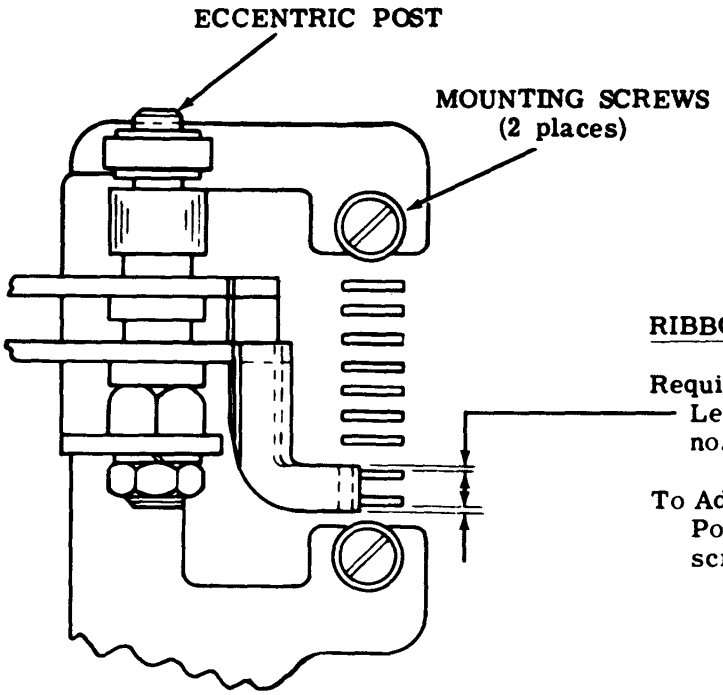

(Left Side View)

RIBBON LEVERS

Requirement
Lever extensions fully engaged by codebars no. 6 and 7, as gauged by eye.

To Adjust
Position contact assembly with mounting screws friction tight.

CONTACT ACTIVATING LEVER

Requirement
With codebars no. 6 and 7 in same condition (marking or spacing), the clearance between the contact swinger pad and its respective lever should be
Min 0.010 inch

To Adjust
Position eccentric post; keep high part of eccentric toward left of unit.

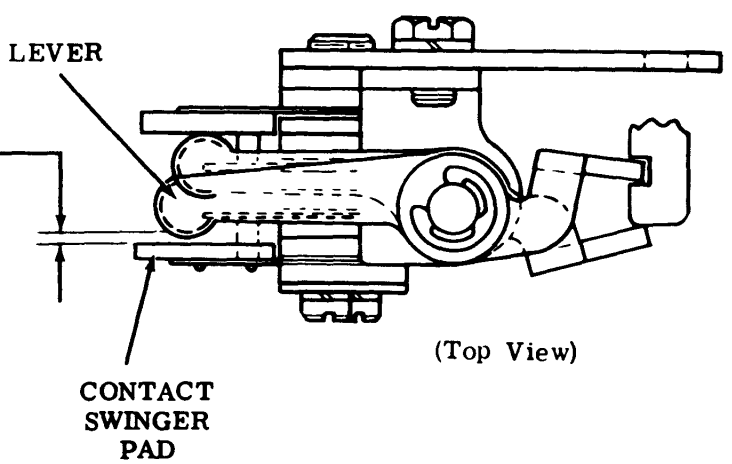

(Top View)

3.43 Two Color Ribbon Mechanism (continued)

CONTACT SPRING

Requirement
To separate the normally closed contacts, it should require
Min 1-1/2 oz---Max 2-1/2 oz

To Adjust
Bend stationary contact spring.

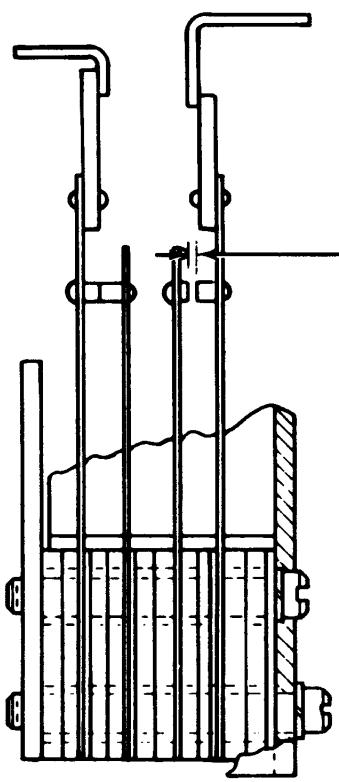

(Top View)

CONTACT GAP

Requirement
With no. 6 and 7 codebars in opposite conditions (one marking and one spacing), there should be a gap between the contact points
Min 0.020 inch

To Adjust
Refine CONTACT ACTIVATING LEVER (3.42).

3.44 Universal Function Bar

CODING

FUNCTION BAR
CODING FOR 8-LEVEL ASA DATA INTERCHANGE CODE (1966-1967) (ASCII CODE)

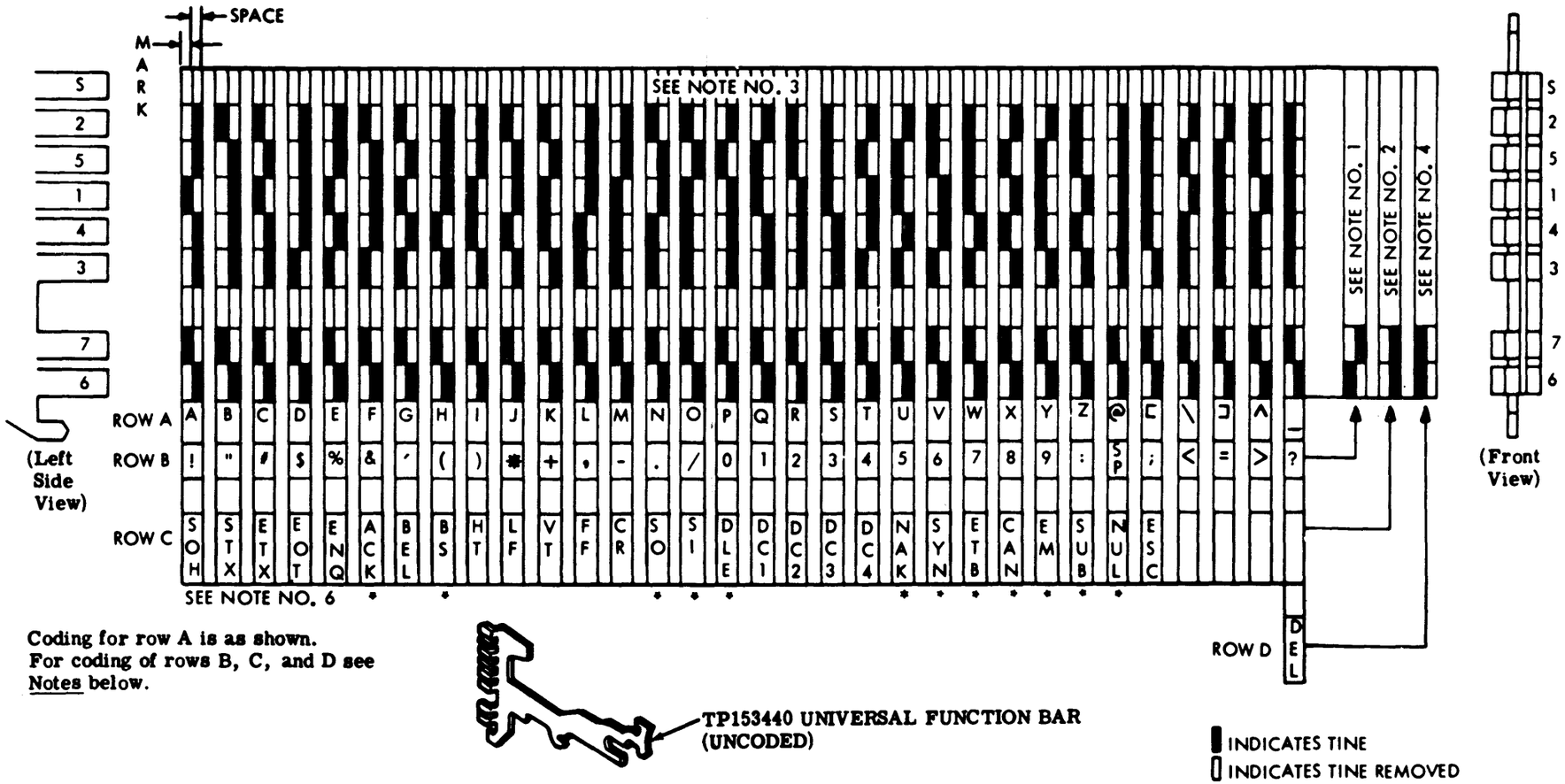

Notes:

1. To operate function bars on symbols and numbers in row B, number 6 tine is left on the marking side and, number 7 tine is left on the spacing side.
2. To operate function bars on nonprinting functions in row C, number 6 and number 7 tines are left on the spacing side.
3. Suppression tine can be coded marking, spacing, or both to control the function bar. In selective calling systems and systems using the stunt shift solenoid, code as follows:
   a. To sense suppression bar in mark (nonselect or nonprint), break off the spacing tine.
   b. To sense suppression bar in space (solenoid operated, select or print), break off the marking tine.
   c. To sense in either condition break off both tines.
   d. In TWX and other systems not using a stunt shift solenoid, the suppression codebar is held by a clip in the spacing position. Break off marking tine.
4. To operate function bar on code in row D, number 6 and number 7 tines are left on the marking side.
5. The number 8 codebar is omitted from the printer since the number 8 code bit is not used for printing.

*6. These characters in row C have no associated keytop on Model 35 keyboards.

7. Bell system uses the 1966 ASCII code as shown on the above illustration except for the following

ASCII CODE	BELL SYSTEM USAGE	ASCII CODE	BELL SYSTEM USAGE
ENQ	WRU	DC1	XON
BEL	BELL	DC2	TAPE
HT	TAB	DC3	XOFF
LF	LINE FEED	DC4	~~TAPE~~
CR	RETURN	DEL	RUB OUT

8. Refer to appropriate parts section for additional cross reference information pertaining to function bars and codes.

35 KEYBOARD FOR AUTOMATIC SEND-RECEIVE SETS

ADJUSTMENTS

CONTENTS PAGE

CONTENTS PAGE

CONTENTS PAGE

1. GENERAL

1.01 This section is reissued to add recent engineering changes and strobing requirements. Since this is a general revision, marginal arrows, used to indicate changes, have been omitted.

1.02 The adjustments of each unit are arranged in a sequence that should be followed if a complete readjustment of the unit were undertaken. The tools and spring scales required to perform these adjustments are listed in the applicable section. After an adjustment is completed, be sure to tighten any nuts or screws that are loosened. The adjusting illustrations indicate tolerances, positions of moving parts, spring tensions, and the angles at which scales should be applied when measuring spring tensions. If a part that is mounted on shims is removed, the number of shims used at each of its mounting screws should be noted so that the same number is replaced when the part is remounted.

1.03 The spring tensions given in this bulletin are indicated values and should be checked with proper spring scales in the positions indicated. Replace springs that do not meet requirements, unless otherwise indicated.

1.04 References made to left or right, up or down, front or rear, etc, apply to the unit in its normal operating position as viewed from the front.

1.05 When a requirement calls for a clutch to be disengaged, the clutch shoe lever must be fully latched between its trip lever and latchlever so that the clutch shoes (Par. 2.04) release their tension on the clutch drum. When engaged, the clutch shoe lever is unlatched and the clutch shoes are wedged firmly against the clutch drum.

1.06 All electrical contact points should meet squarely. Contacts with the same diameter should not be out of alignment more than 25 percent of the contact diameter. Check contacts for pitting and corrosion and clean or burnish them before making specified adjustment or tolerance measurement. Avoid sharp kinks or bends in the contact springs.

Note: Keep all electrical contacts free of oil and grease.

GOLD-PLATED SIGNAL CONTACTS

1.07 All units now being manufactured have signal contacts made of gold-plated tungsten. Older units may have unplated tungsten contacts. If in doubt as to the type of contacts, remove signal generator cover and inspect contacts for gold plating.

(a) Servicing: For standard applications including those with data sets, observe standard maintenance intervals. For special low current applications, see below.

(b) Cleaning

(1) Use twill jean cloth (KS2423) to clean gold-plated contacts.

(2) Open contacts. Drop strip of twill jean between them.

(3) Close contacts. Draw twill jean part way through. Open contacts and withdraw twill jean.

(4) This procedure prevents small fibers at edges of twill jean strip from becoming lodged between contacts.

(5) Clean unplated tungsten contacts in accordance with standard procedures.

(c) Special Low Voltage Applications

Note: Following does not apply to standard applications.

(1) The recommended cleaning interval for gold-plated contacts in special low level applications (less than 250 microwatts) having an average weekly use of 60 hours should not exceed 90 days. This interval may be reduced, dependent on the circuit configuration, usage, and environment. Contacts should be cleaned as described in 1.07 (b).

Note 1: Applying operating voltage of standard Distortion Test Set directly to contacts may damage gold plating and impair low voltage operation. When electrically adjusting or testing contacts (Par. 2.17), use an intermediate device, keyed by the contacts, to interrupt current to stroboscopic lamp of test set. This intermediate device must be capable of being keyed by a 3- to 20-volt change at maximum of 20 milliamperes.

Note 2: Normally for low voltage applications, contacts should be used in circuits operating between 3 and 20 volts dc at a current level not to exceed 60 milliamperes. Between 20 and 70 volts dc, the current should be adjusted so that it does not exceed a 120 milliwatt power level. The contacts are not normally intended for use on voltages above 70 volts dc. Exceeding these levels for an appreciable length of time may result in damage to the gold plating and make them unfit for low voltage applications.

2. BASIC UNIT

2.01 Codebar Assembly

(B) CODE LEVER UNIVERSAL BAIL SPRING

Requirement
Generator clutch disengaged.
Min 1 oz---Max 1-3/4 oz
to start bail moving.

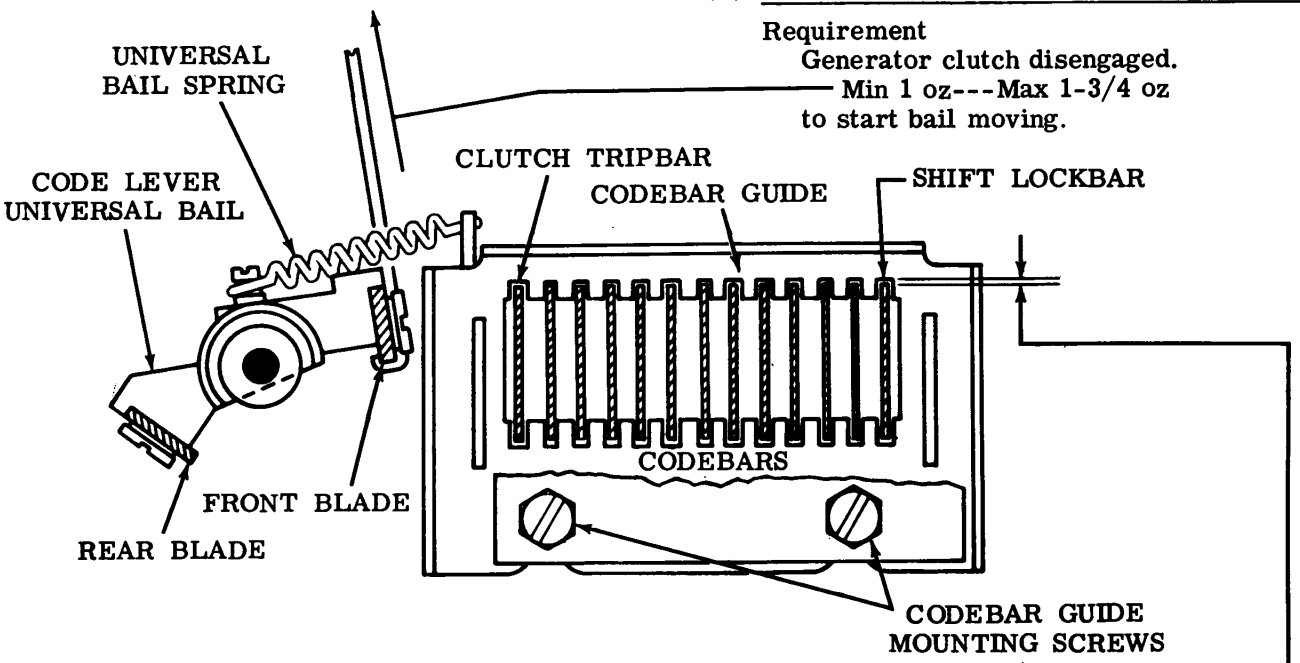

(A) CODEBAR GUIDE CLEARANCE

Requirement
Clearance between the top of no. 1 and no. 8 codebars should be
Min some---Max 0.006 inch
All codebars should move freely.

To Adjust
With mounting screws for either the left or right codebar guides friction tight, position guides. Tighten screws.

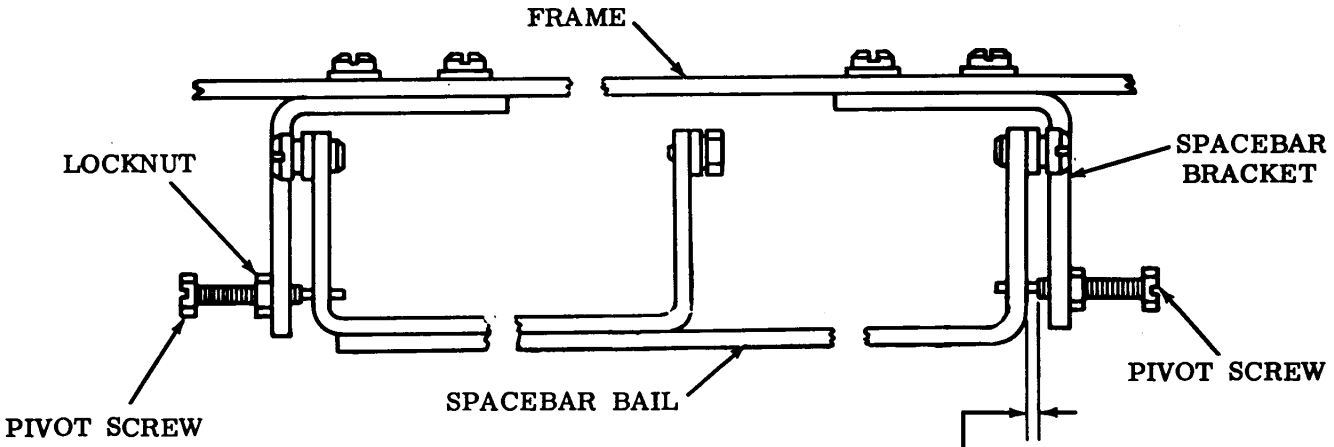

(C) SPACEBAR BAIL PIVOT

Requirement
Min some endplay---Max 0.010 inch
Spacebar free from bind.

To Adjust
Position spacebar with pivot screws.

2.02 Signal Generator Mechanism

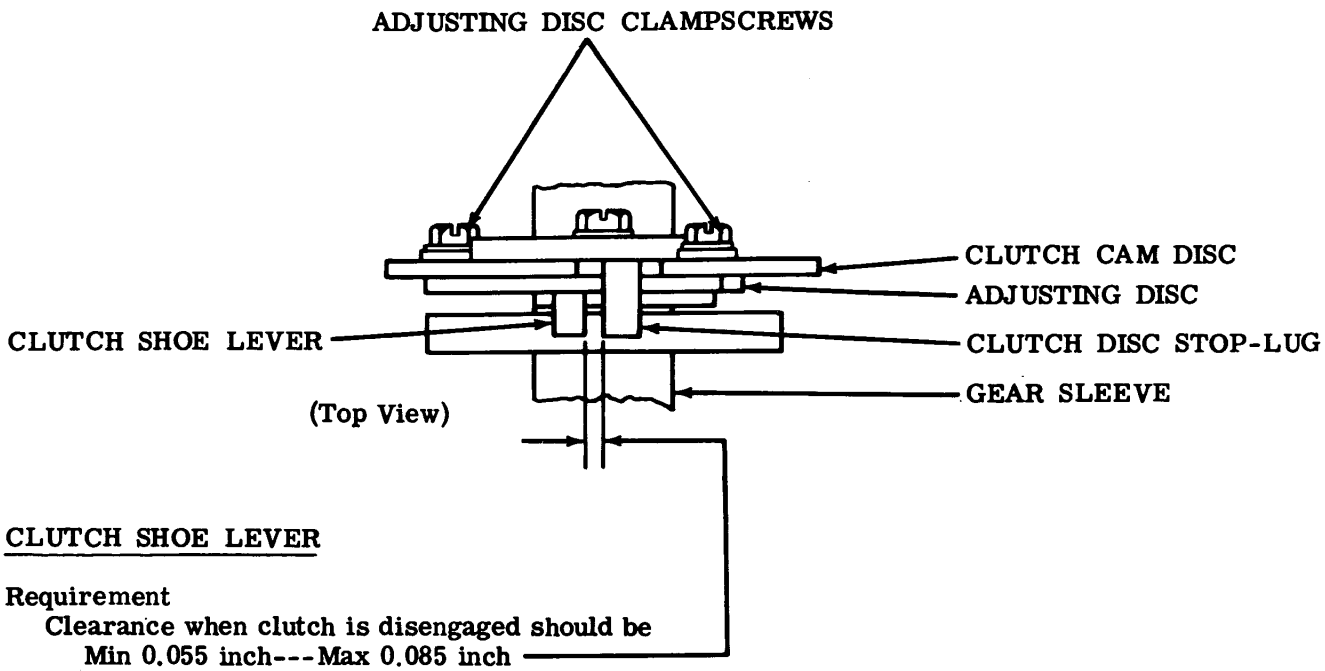

CLUTCH SHOE LEVER

Requirement
Clearance when clutch is disengaged should be
Min 0.055 inch---Max 0.085 inch
less than when clutch is engaged.

To Check
Latch clutch in disengaged position and measure clearance. Rotate gear until oil hole is upward. Engage clutch and measure clearance.

To Adjust
Loosen the two adjusting disc clampscrews to position disc.

2.03 Signal Generator Mechanism (continued)

(B) CLUTCH STOP LEVER SPRING

Requirement
Clutch engaged and rotated 1/4 turn.
Min 2 oz---Max 3 oz
to start lever moving.

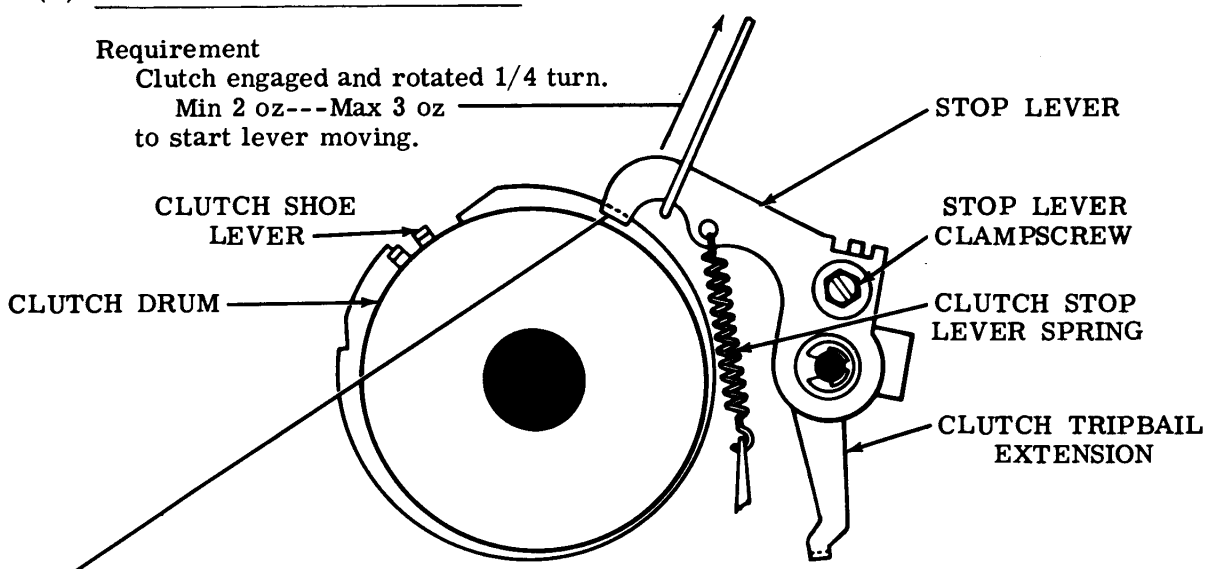

(A) CLUTCH STOP LEVER

Requirement
Should fully engage clutch shoe lever. During rotation, the lever should not touch the clutch drum at any point.

To Adjust
Position stop lever with its clamp-screw loosened.

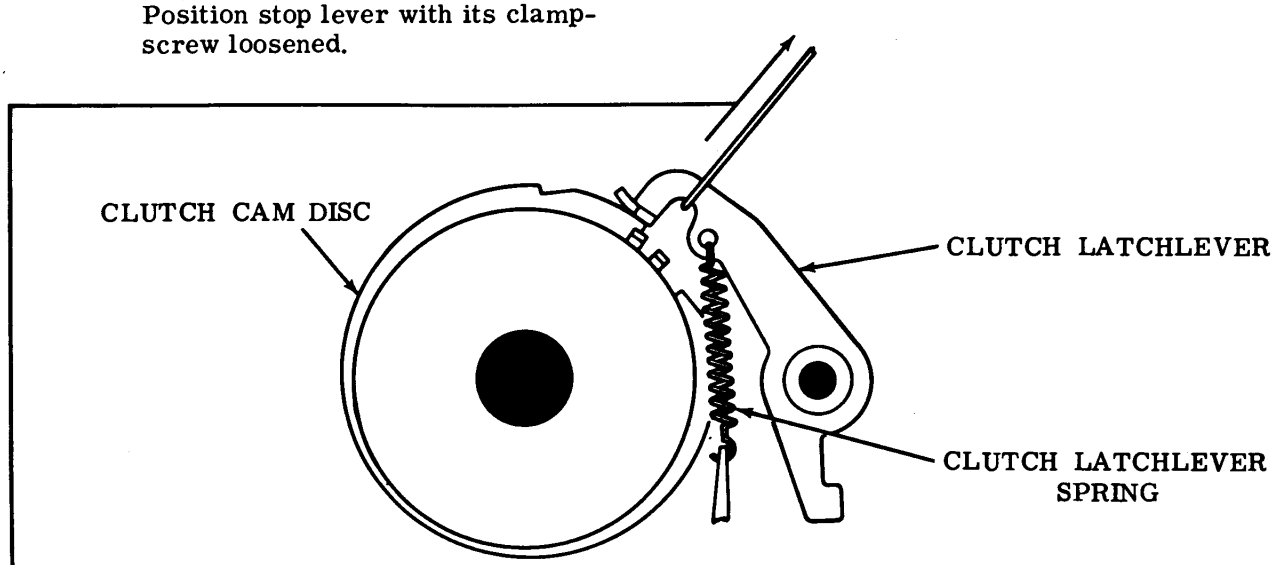

(C) CLUTCH LATCHLEVER SPRING

Requirement
Clutch latchlever resting on the highest point of clutch disc.
Min 2 oz---Max 3 oz
to start latchlever moving.

2.04 Signal Generator Mechanism (continued)

CLUTCH SHOE LEVER SPRING

Requirement
Clutch engaged. Cam disc held to prevent turning.
Min 15 oz---Max 20 oz
to move shoe lever in contact with stop-lug.

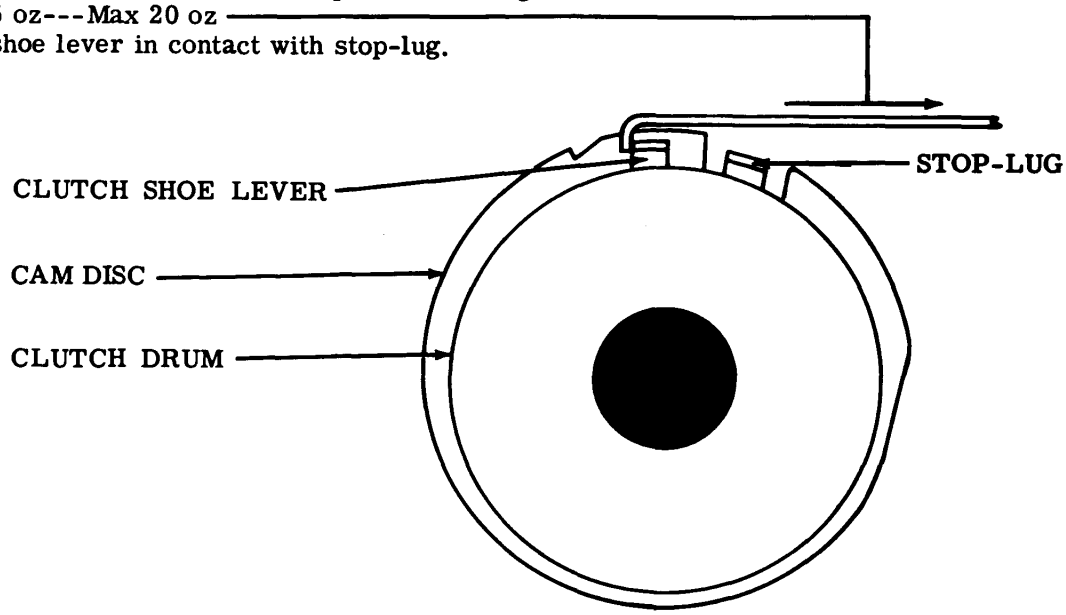

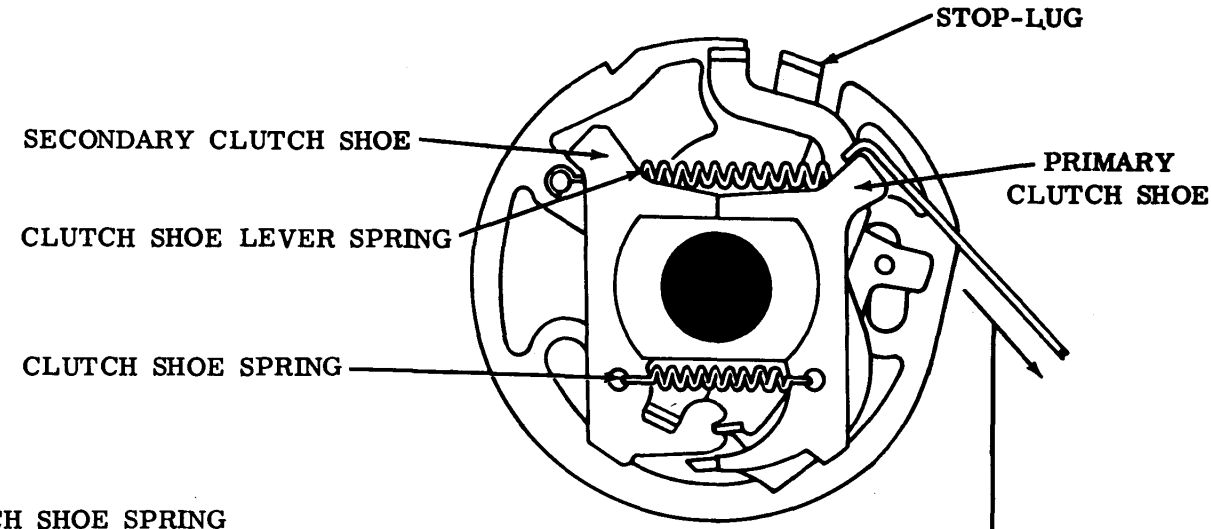

CLUTCH SHOE SPRING

Note: In order to check this spring tension, it is necessary to remove the clutch from the main signal generator drive shaft. Therefore, it should not be checked unless there is good reason to believe that it does not meet its requirement.

Requirement
Clutch drum removed.
Min 3 oz---Max 5 oz
To start primary shoe moving away from secondary shoe at point of contact.

2.05 Signal Generator Mechanism (continued)

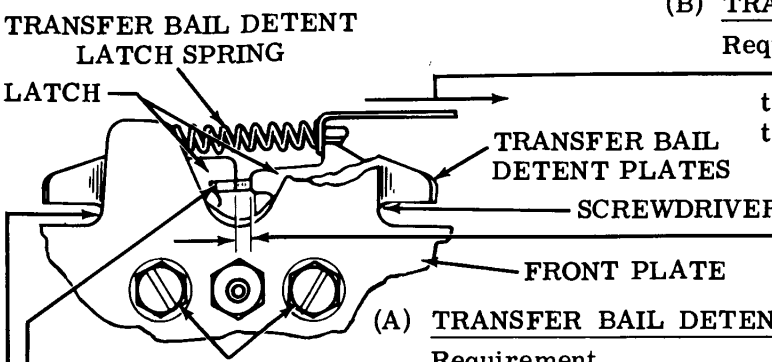

(B) TRANSFER BAIL DETENT LATCH SPRING

Requirement

Min 2-3/4 oz---Max 4-1/4 oz to start latch moving. Hold transfer bail to left.

(A) TRANSFER BAIL DETENT PLATE

Requirement

Equal left hand and right hand clearance within 0.002 inch when transfer bail is at extreme left hand or right hand position as these occur in a character between start and no. 1 pulses only.

To Adjust

Rotate detent plate right or left by means of screwdriver with detent plate mounting screws loosened.

(C) SIGNAL CONTACT CLEARANCE

Requirement

Marking and spacing gaps should be equal within 0.001 inch.

To Check

Depress Y keylever and rotate signal generator cam sleeve until each contact has fully opened.

To Adjust

Loosen mounting screws and move contact box by means of eccentric.

Note: Check by means of signal checking device where possible, and carefully refine the adjustment to eliminate all bias from the signals by equalizing the current-on and current-off intervals (Par. 2.17).

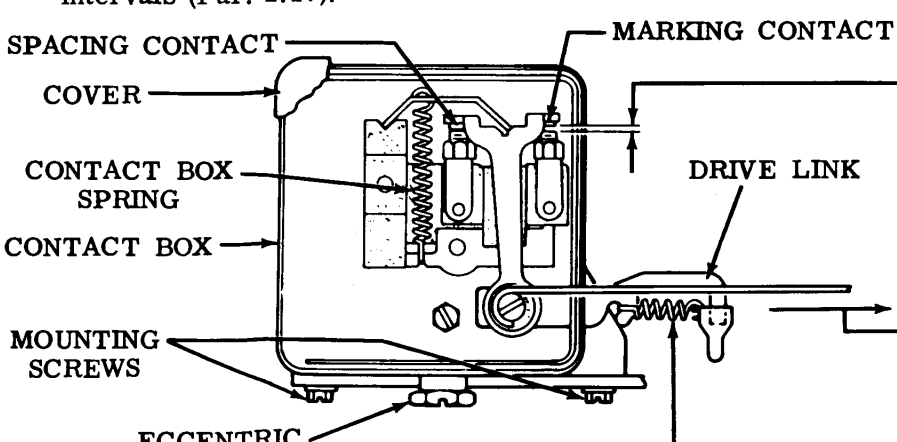

Note: For servicing instructions on gold-plated contacts, see 1.07 on page 3.

(D) SIGNAL CONTACT DRIVE LINK

Requirement

With main shaft in stop position and transfer bail detent latch spring unhooked, move latches away from transfer bail extension. Hold the toggle firmly against contacts.

Min 6 oz---Max 9 oz to start transfer bail extension moving.

(E) SIGNAL CONTACT SPRING

Requirement

Remove drive link spring transfer bail held clear of drive link.

Min 2 oz---Max 3 oz to start link moving.

2.06 Codebar Assembly (continued)

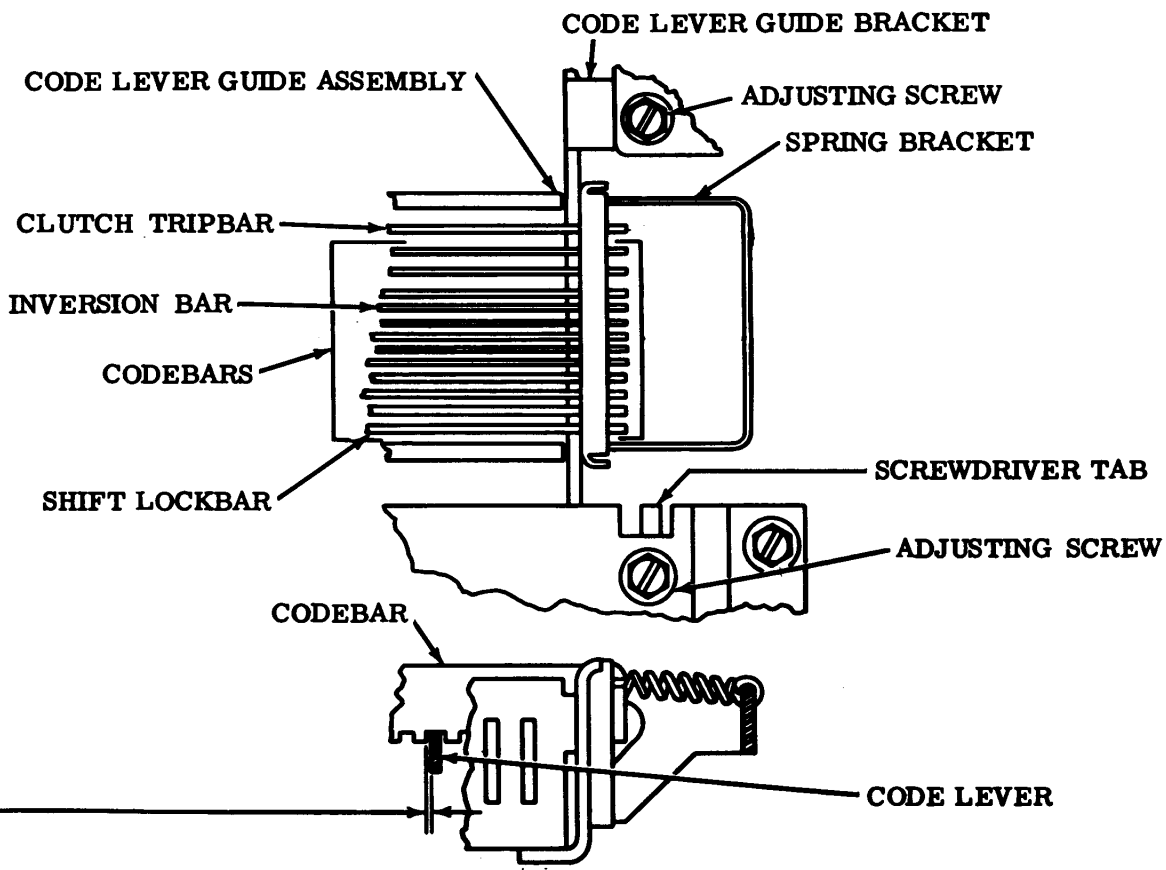

CODEBAR AND CODE LEVER CLEARANCE

Requirement

Permutation must be such that highest level is spacing and located furthest right. While key is held down and cam cycled to stop position, gap between left hand side of key code lever and codebar blocked.

Min 0.006 inch---Max 0.017 inch

To Adjust

Position guide by adjusting slot with four mounting screws loosened.

2.07 Codebar Assembly (continued)

(A) FUNCTION BAIL LEVERS AND CODE LEVER CLEARANCE

Requirement
Function bails should operate within their guides without binding.

To Adjust
Position function bail assembly with two mounting studs loosened, one at each end.

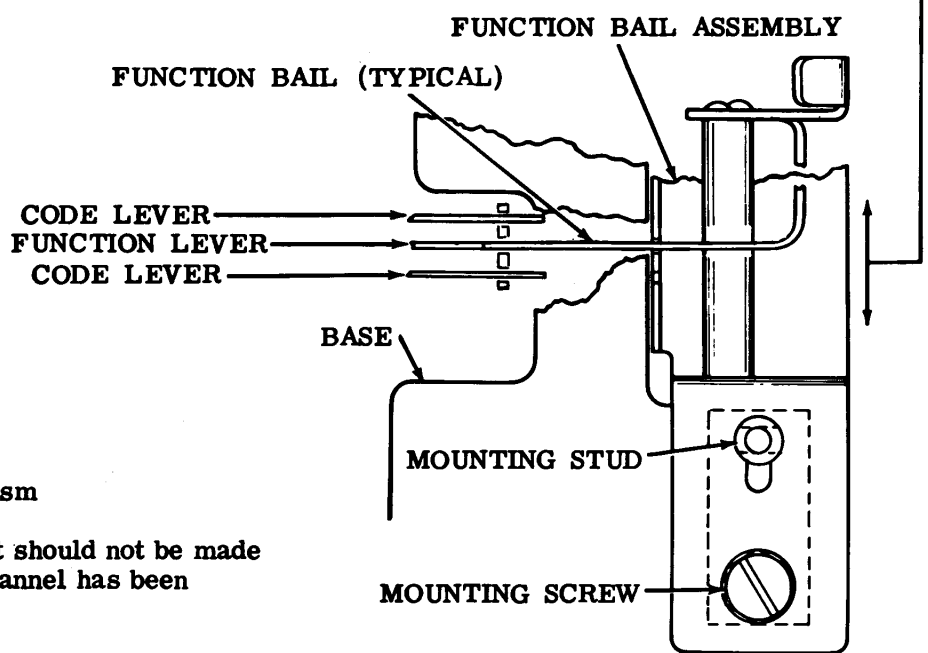

2.08 Keyboard Mechanism

Note: This adjustment should not be made unless the lock ball channel has been disassembled.

(B) LOCK BALL CHANNEL

Requirement
There should be
Min Some---Max 0.006 inch
clearance between end of lock ball channel and adjusting screw when most of the code levers are centrally located in the lock ball channel slots.

To Check
Remove the lock ball retainer. Remove a wedge from each end and one from the center in order to view the position of the code lever.

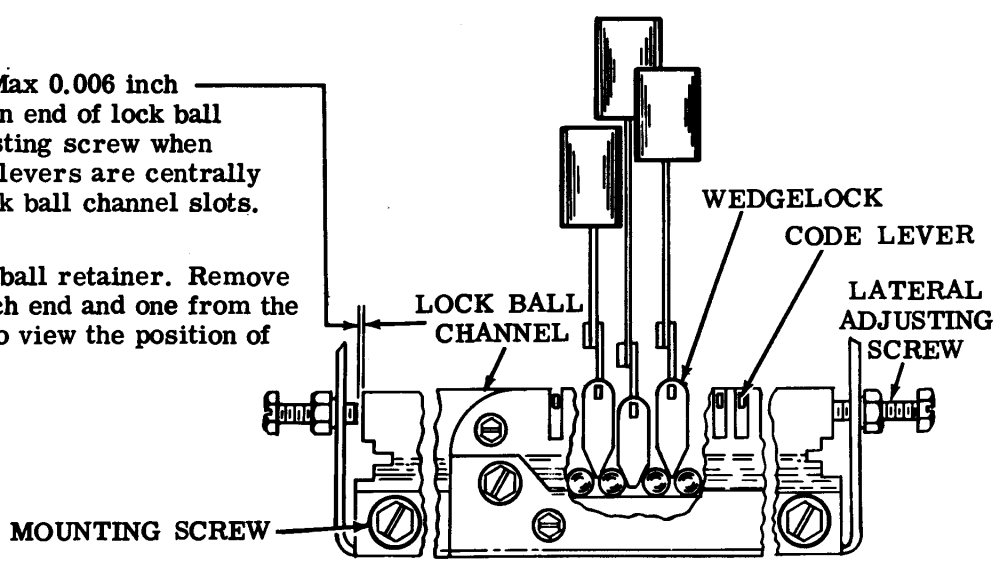

To Adjust
Loosen the lock ball channel mounting screws. Back off lateral adjusting screws and position channel. Turn one adjusting screw in against the end of the channel and lock it. Turn the other adjusting screw in to the end of the channel and back it off 1/4 turn. Lock the screw. Replace the wedges and check their position with respect to the balls. Pull channel assembly downward until all code levers strike their upstop without wedges jumping out of position. Replace lock ball retainer. Back off ball endplay adjusting screw.

2.09 Codebar Assembly (continued)

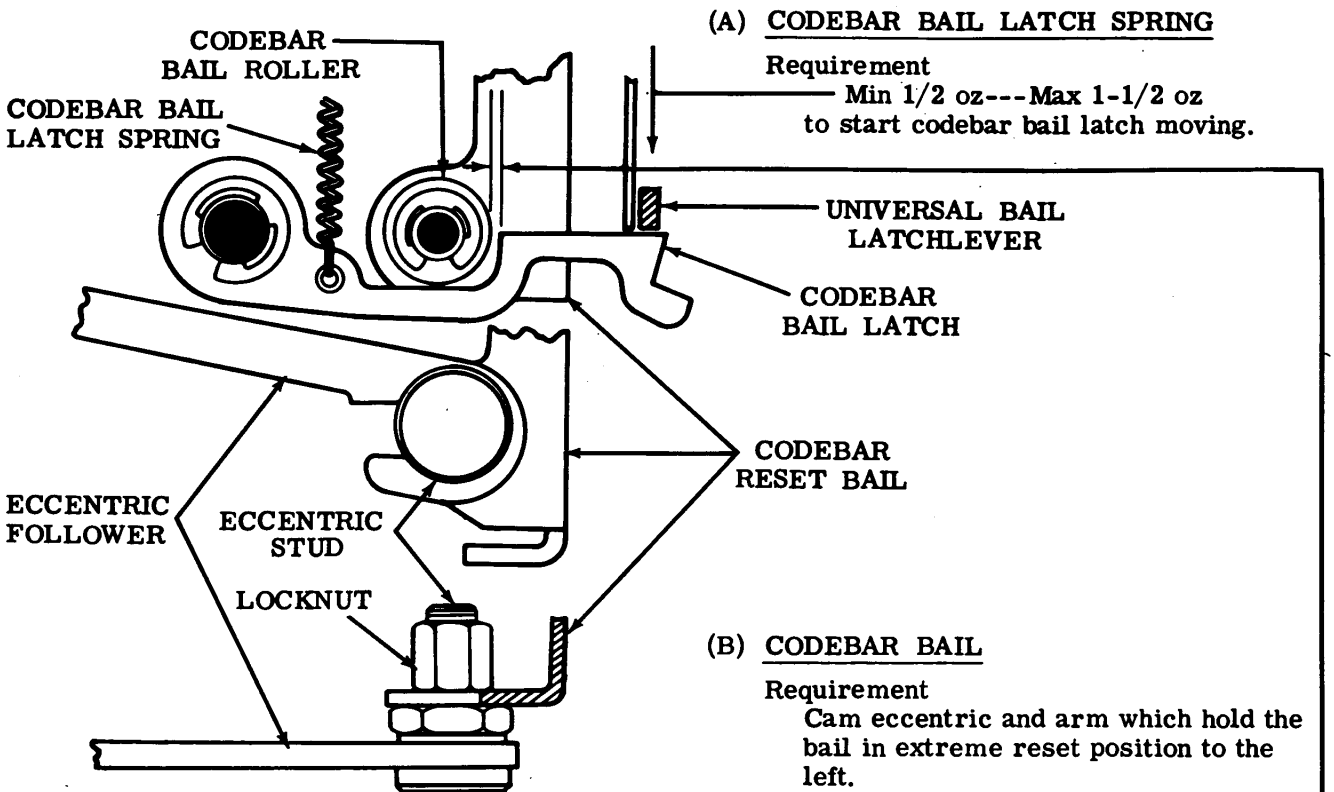

(A) CODEBAR BAIL LATCH SPRING

Requirement
Min 1/2 oz---Max 1-1/2 oz
to start codebar bail latch moving.

(B) CODEBAR BAIL

Requirement
Cam eccentric and arm which hold the bail in extreme reset position to the left.
Min some---Max 0.006 inch
between codebar bail roller and codebar bail latch.

To Adjust
With locknut loosened, adjust eccentric stud so that high point is in upper half of arc.

(C) NONREPEAT LEVER SPRING

Requirement
Clutch disengaged, any keylever depressed
Min 2-1/4 oz---Max 3-1/4 oz
to start nonrepeat lever moving downward.

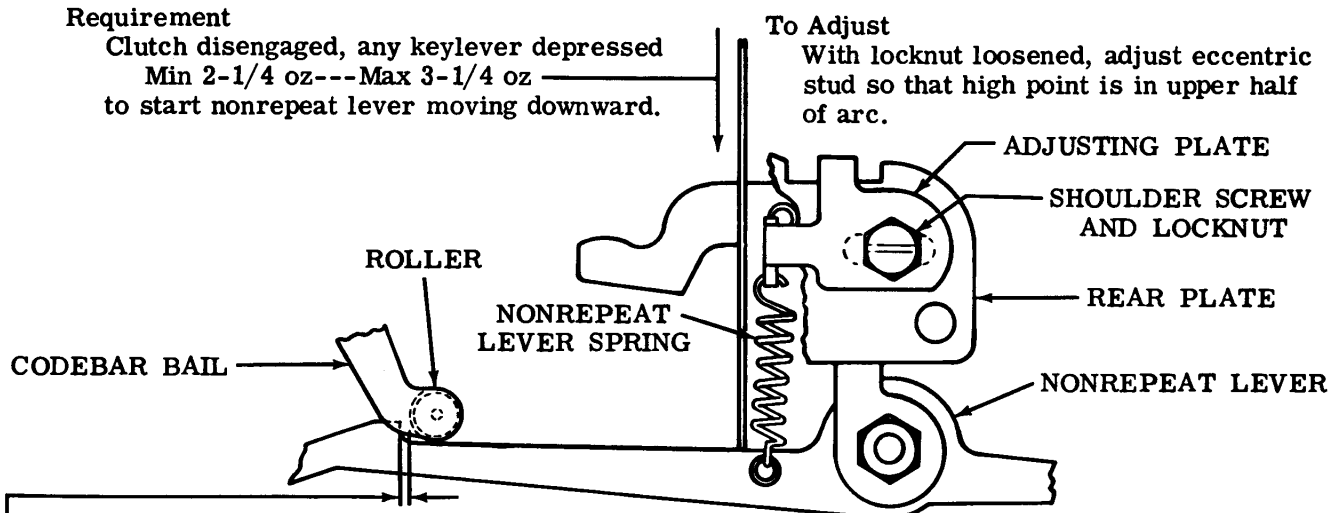

(D) CODEBAR BAIL AND NONREPEAT LEVER CLEARANCE

Requirement
Mechanism in initial trip off position, any key depressed, no power.
Min some---Max 0.010 inch
between roller of reset bail and nonrepeat lever pickup step.

To Adjust
Loosen locknut and shoulder screw and move mechanism left or right.

Note: Do not permit clutch to rotate when tripping off.

2.10 Keyboard Mechanism (continued)

Note: Remove keyboard hood in order to make this adjustment. See disassembly and reassembly.

(A) BALL WEDGELOCK AND BALL TRACK CLEARANCE (PRELIMINARY)

Requirement
Clearance between tip of wedge and the track should be
Min 0.005 inch---Max 0.015 inch and equal within 0.005 inch.

To Check
Depress Q and P keylevers alternately with 32 oz pressure and measure clearance in each instance. There should be no clearance between lower edge of code lever extensions and bottom of slots in wedges.

To Adjust
Position ball track up or down with the two mounting screws loosened.

(B) LOCK BALL ENDPLAY (PRELIMINARY)

Requirement
Clearance between balls should be minimum.

To Check
With ball endplay adjustment screw backed off, depress key at extreme right end of the A row with 32 oz pressure.

To Adjust
Maintain 32 oz pressure and rotate adjusting screw with fingers until a slight resistance is felt. Tighten locknut.

Note: A total of 53 balls are required in the ball track assembly.

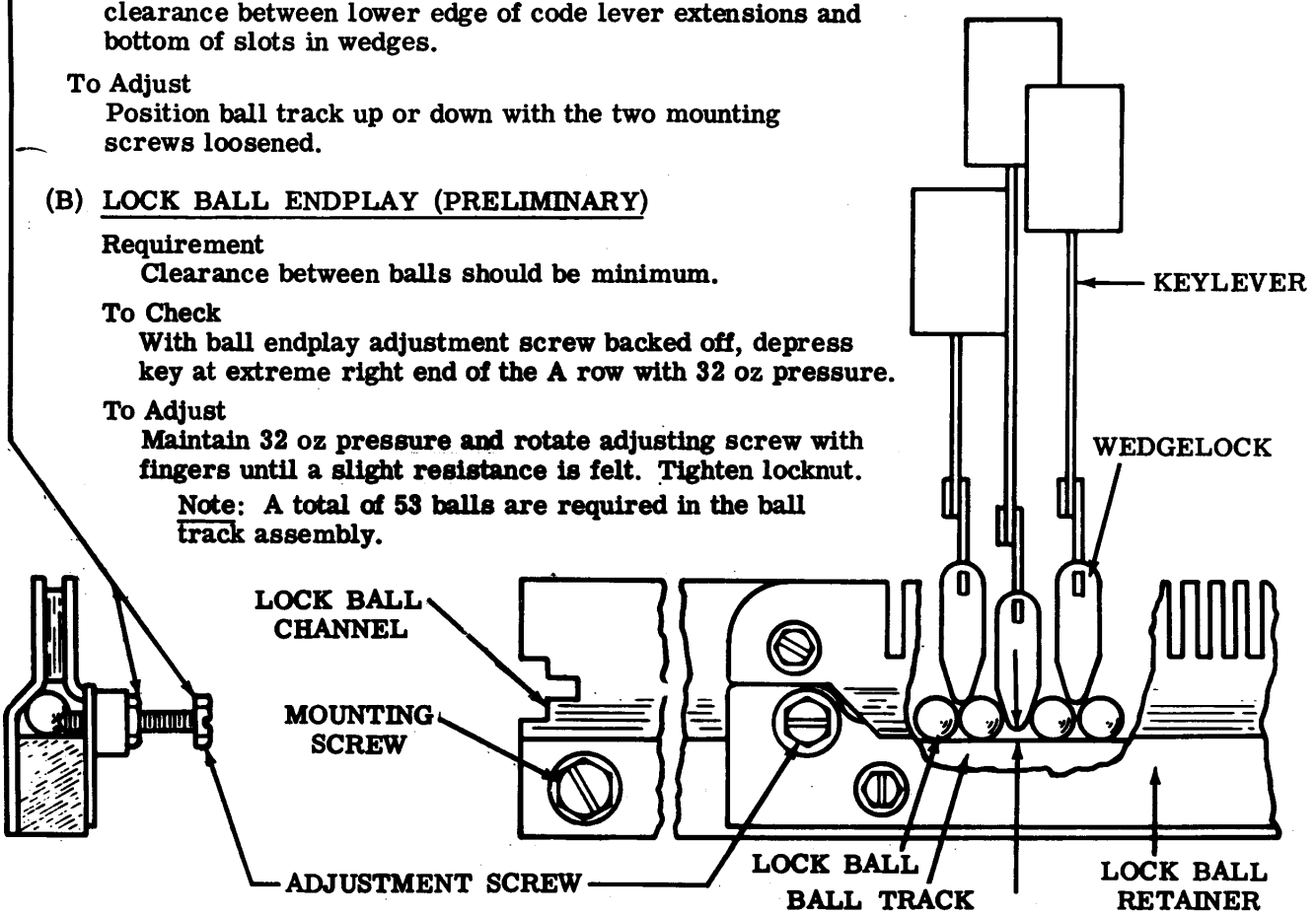

(C) BALL WEDGELOCK, BALL ENDPLAY, AND UNIVERSAL BAIL LATCH (FINAL)

Note: Perform this adjustment following (C) in Par. 2.11.

Requirement (Under Power)
(1) Trip off pressure of any key in row A should be
Min 2 oz---Max 6 oz
(2) Apply 6-1/2 oz pressure perpendicular to A key, depress each key in that row. The A key should trip each time a key is released.
(3) Repeat (2) with the 6-1/2 oz pressure on extreme right key in that row.
(4) The clutch should not trip when two keys are depressed simultaneously.

To Adjust
If necessary, refine BALL WEDGELOCK AND BALL TRACK CLEARANCE (PRELIMINARY) Par. 2.10, LOCK BALL ENDPLAY (PRELIMINARY) Par. 2.10, UNIVERSAL BAIL LATCH-LEVER (PRELIMINARY) Par. 2.11, and UNIVERSAL BAIL EXTENSION Par. 2.11 adjustments.

2.11 Codebar Assembly (continued)

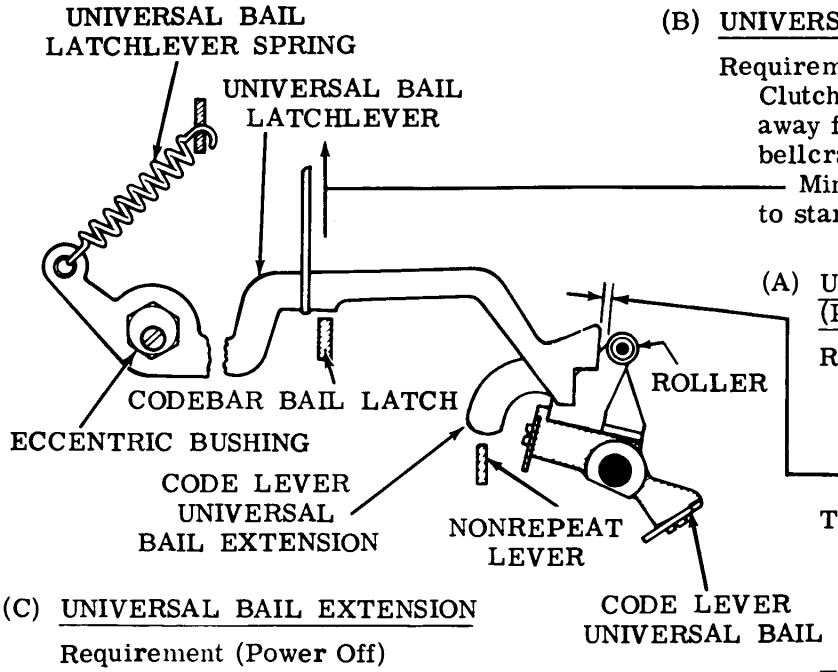

(B) UNIVERSAL BAIL LATCHLEVER SPRING

Requirement
Clutch disengaged, universal bail held away from latchlever. Nonrepeat lever bellcrank held down against its stop post.
Min 7-1/2 oz---Max 11 oz
to start latchlever moving.

(A) UNIVERSAL BAIL LATCHLEVER (PRELIMINARY)

Requirement
Clearance between universal bail latchlever and roller on universal bail extension should be
Min 0.015 inch---Max 0.025 inch

To Check
Depress G key slowly with 32 oz pressure. Manually rotate universal bail backwards and release quickly.

To Adjust
Rotate eccentric. Keep high part of eccentric up.

Note: It will be necessary to remake UNIVERSAL BAIL - REAR BLADE Par. 2.11 adjustment.

(C) UNIVERSAL BAIL EXTENSION

Requirement (Power Off)
Universal bail extension roller resting against end of universal bail latchlever
Min 0.050 inch---Max 0.080 inch
between extension and nonrepeat lever

To Check
Depress rubout keylever and release it. Check clearance.

To Adjust
Position the extension with its clampscrew loosened.

(E) BALL WEDGELOCK, BALL ENDPLAY, AND UNIVERSAL BAIL LATCH (FINAL)
see Par. 2.10

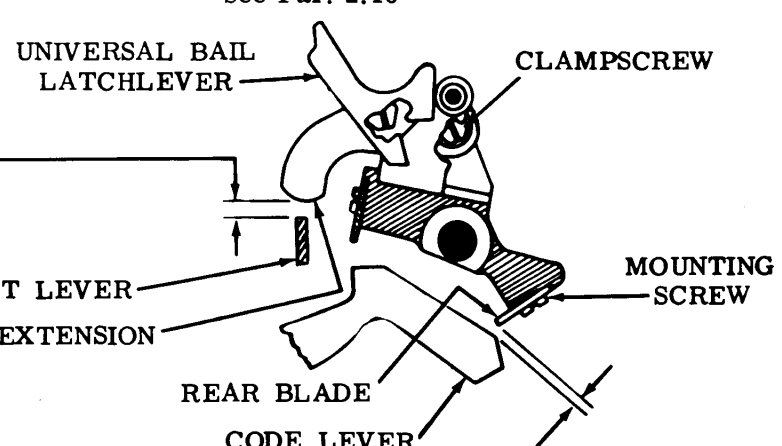

(D) UNIVERSAL BAIL - REAR BLADE

Requirement
Unit in initial trip off condition, no key depressed, no power, extension post of universal bail resting against the end of latch
Min Some---Max 0.025 inch
between universal bail rear blade and any code lever.

To Adjust
Position rear blade with mounting screws loosened.

2.12 Keyboard Mechanism (continued)

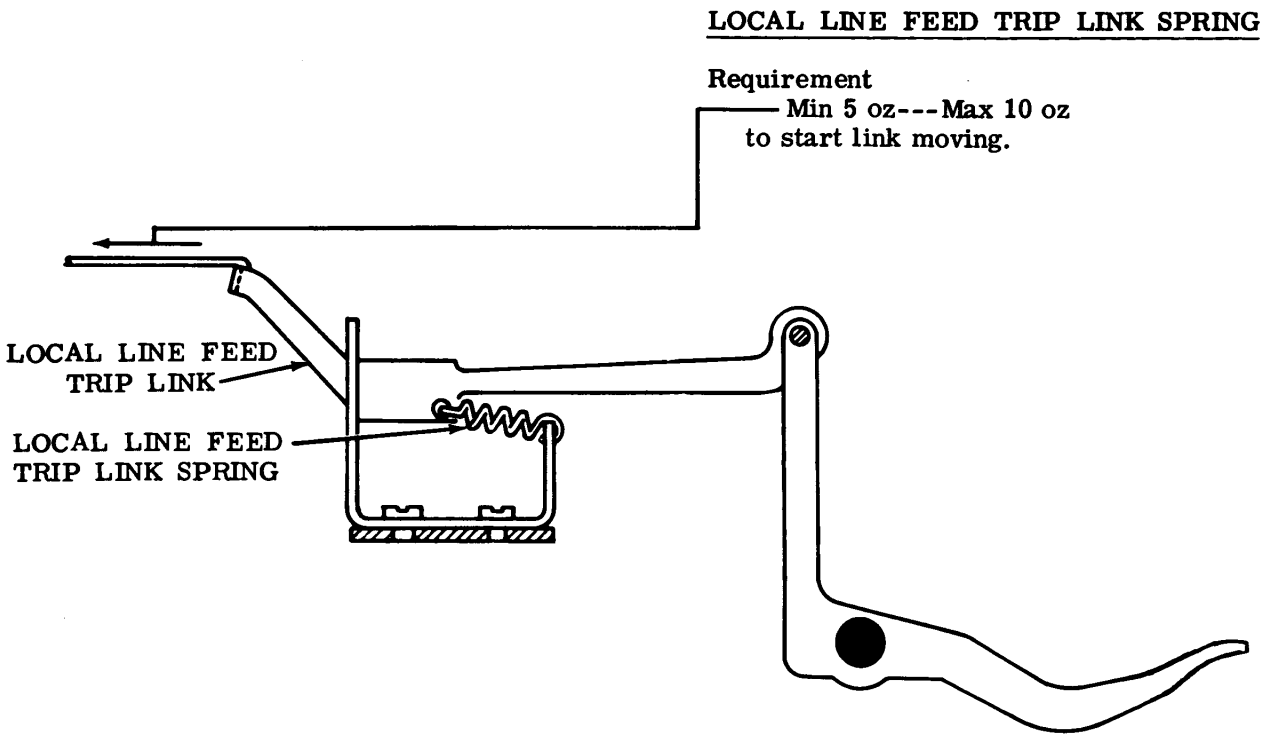

2.13 Codebar Assembly (continued)

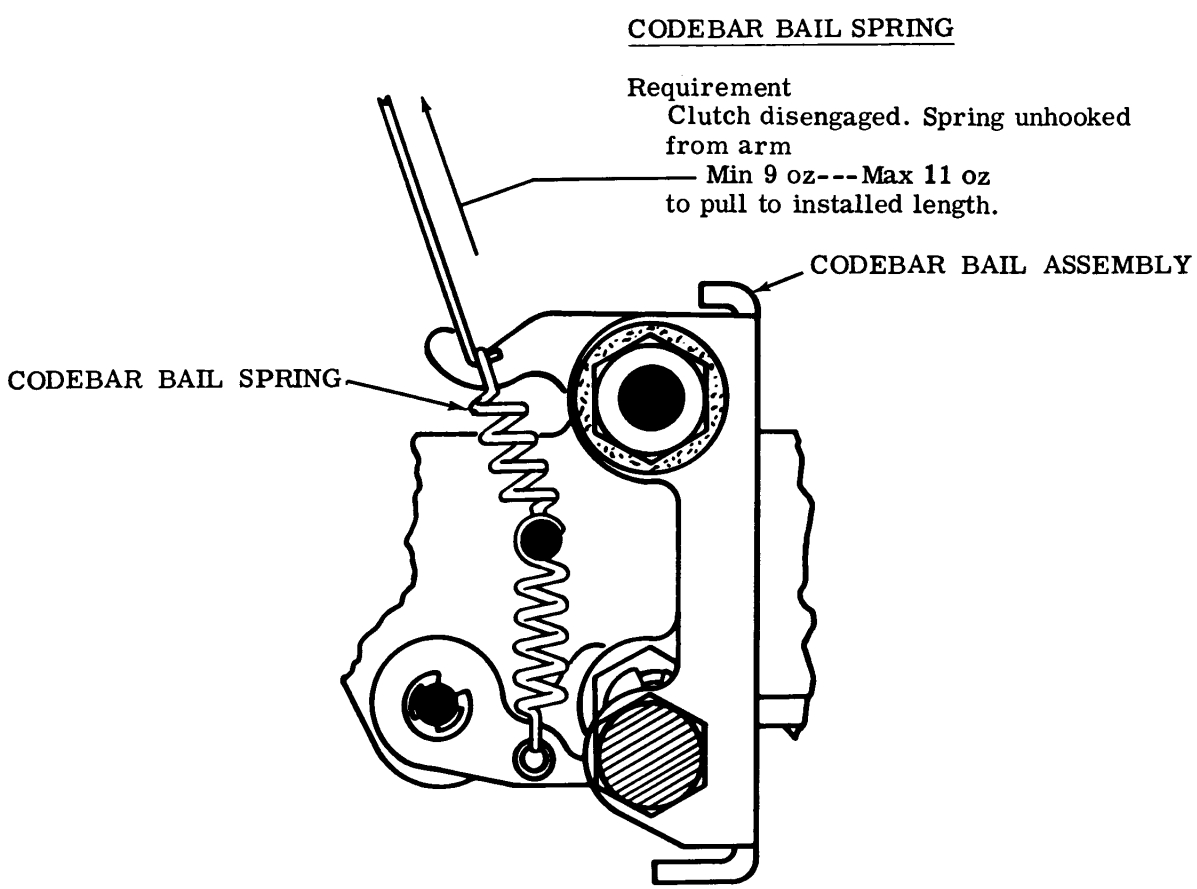

2.14 Keyboard Mechanism (continued)

KEYTOP GUIDE SPACING

Requirement
Gap between frame and left and right mounting bracket should be
Min 0.141 inch---Max 0.171 inch

To Adjust
Tighten or loosen as required the four frame mounting screws.

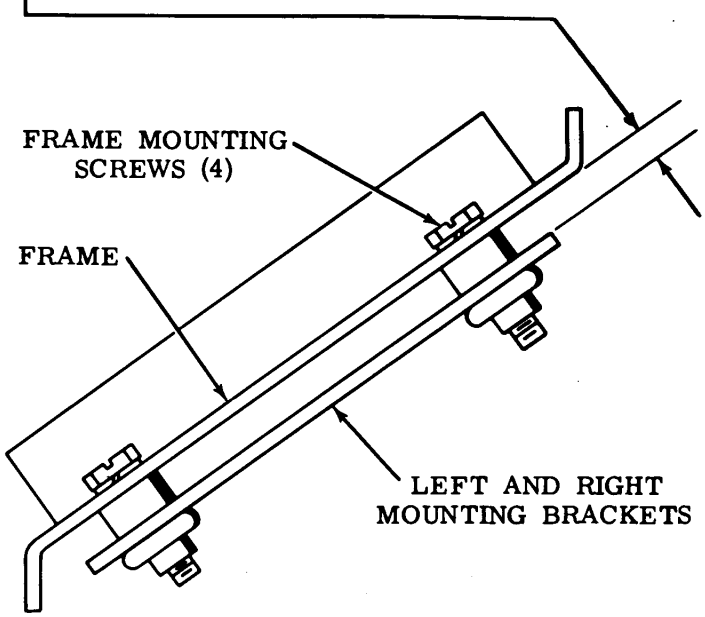

2.15 Codebar Assembly (continued)

(A) INVERSION LATCH SPRING TENSION (EARLY DESIGN)

Requirement
Min 3-1/2 oz---Max 4-1/2 oz
to move bail.

Min 3/4 oz---Max 1-1/2 oz
on nonparity keyboards.

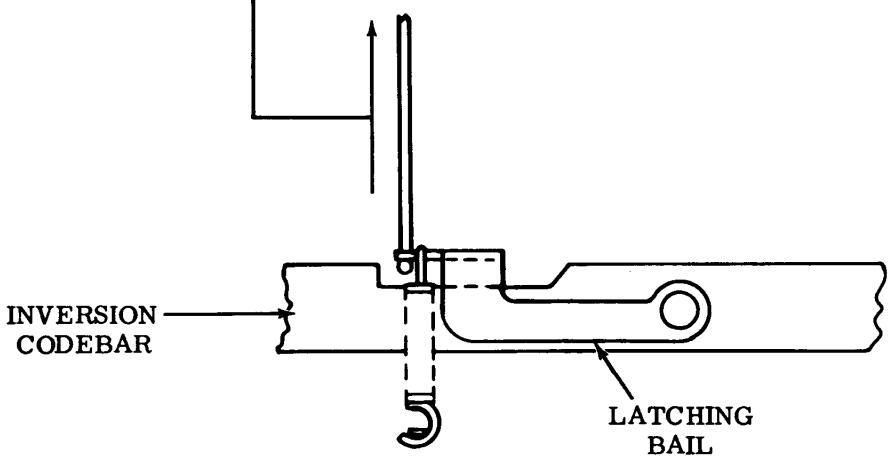

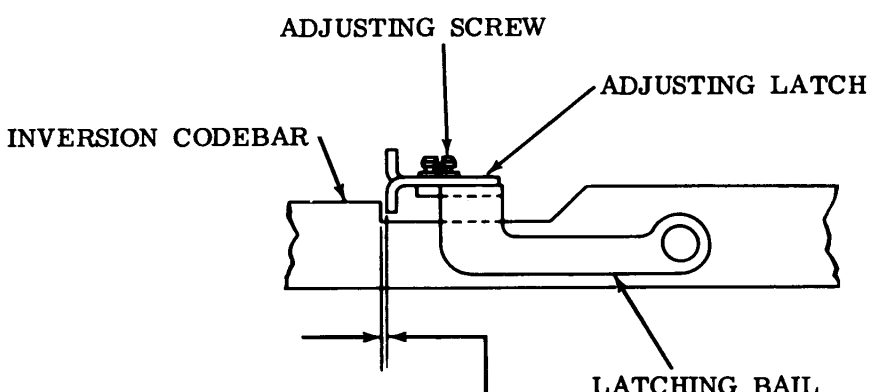

(B) INVERSION CODEBAR LATCH
(EARLY DESIGN)

Requirement
Signal generator disengaged
Min 0.002 inch---Max 0.012 inch
gap between inversion codebar and its latch.
Latch should align with inversion codebar.

To Adjust
With screw on inversion bail friction tight,
move adjustable extension to obtain clearance.

2.16 Codebar Assembly (continued)

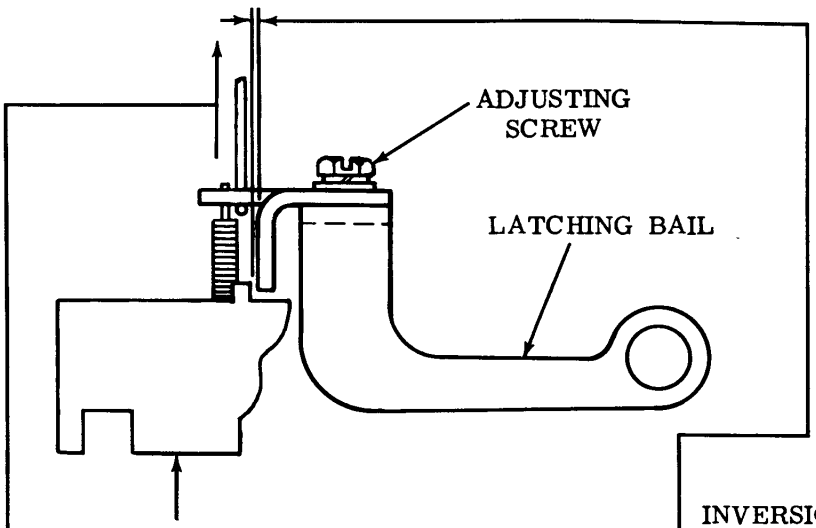

INVERSION CODEBAR LATCH (LATER DESIGN)

Requirement

Signal generator clutch disengaged.

Min 0.002 inch---Max 0.012 inch

Gap between number 5 and 8 inversion codebars and their respective latches. Check clearance at both the number 5 and 8 inversion codebars and adjust to whichever is closest.

To Adjust

With respective screws on inversion bail latch friction tight, move adjustable extension to obtain clearance. Tighten screws and recheck clearance.

INVERSION BAR LATCHING BAIL SPRING (LATER DESIGN)

(1) Requirement

Min 2-1/2 oz---Max 3-1/2 oz to move no. 5 inversion bail.

(2) Requirement

Min 1-1/2 oz---Max 2-1/2 oz to move no. 8 inversion bail.

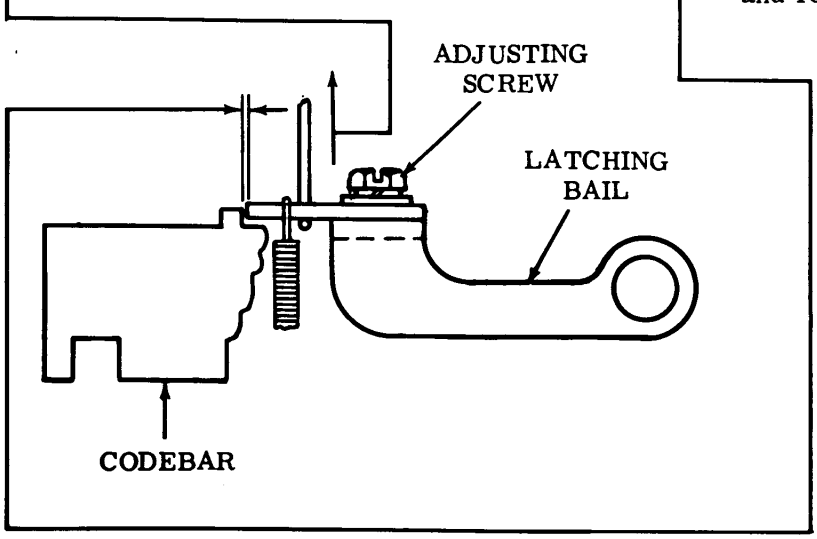

2.17 Signal Generator Mechanism (continued)

Note: On units equipped with signal regenerators, remove regenerator circuit card before applying test set probes to contact access terminals.

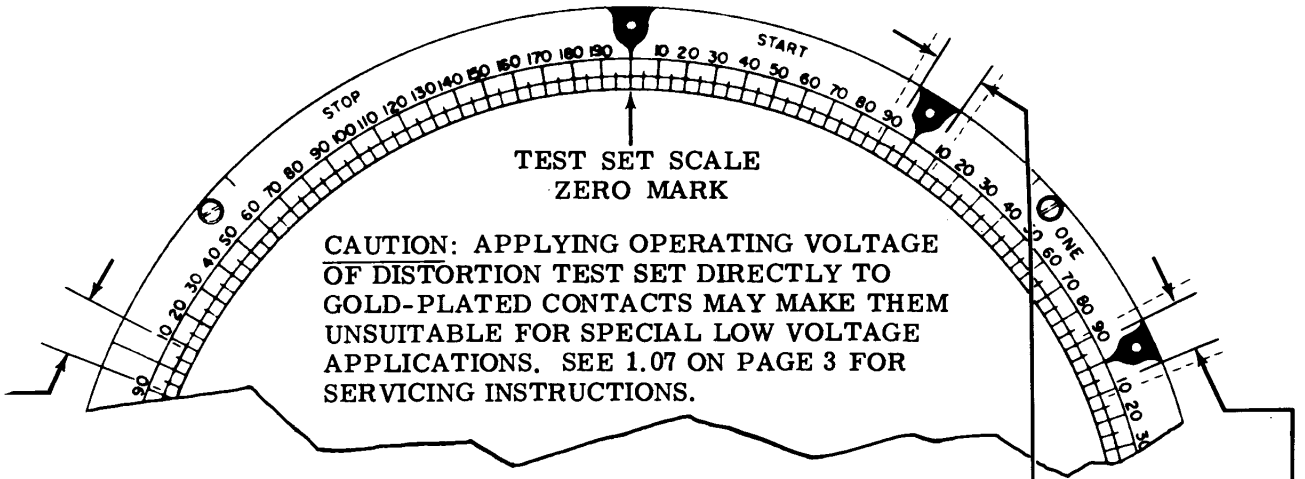

SIGNALING CODE CONTACT (STROBING)

Procedure

(1) Disconnect arc suppressor or RF filter. Reconnect signal generator contacts so current to stroboscope lamp of DXD test set is interrupted. Synchronize signal generator with DXD so end of stop pulse image is in line with "0" mark or start pulse on DXD scale when transmission is continuous and both units are operating at 100 wpm (600 rpm).

Note: If end of stop pulse varies, adjust the scale so the variation extends equally to either side of "0" mark of start pulse on scale. Numbers in parenthesis ( ) are for units using timing contacts.

(2) Nominal length of intelligence pulses is 100 divisions. If adjustment to feeler gauges does not permit pulse lengths within tolerance, refine SIGNAL CONTACT CLEARANCE Par. 2.05 adjustment. Favor intelligence pulses by using up to ±8 divisions tolerance on beginning of stop pulse, so each is near as possible to 100 divisions in length.

Requirement

(1) Each marking code pulse to begin not later than 8 (12) mark and no earlier than 92 (88) mark of previous pulse.

(2) Each marking code pulse to end not earlier than 92 (88) mark or later than 8 (12) mark in pulse following one being observed.

(3) Marking code pulses may have break not more than 3 divisions wide and occurs only at end of code pulse image between the 92 (88) mark and end of image.

(4) Stop image should not change in length or position more than 1 division while changing from R to Y selection (or equivalent permutations for other codes).

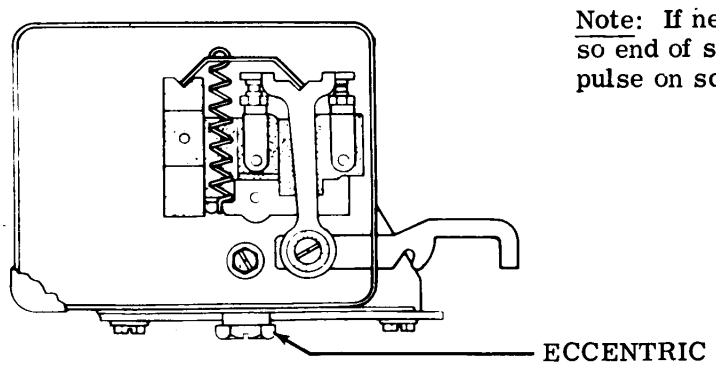

Note: If necessary, reposition stabilizer mechanism so end of stop image coincides with "0" mark of start pulse on scale. (Do not remove scale.)

(5) DXD strobing should yield allowable spacing signal distortion of ±12%.

To Adjust

Loosen mounting screws and move contact box by means of eccentric.

2.18 Keyboard Mechanism (continued)

(A) CODE LEVER SPRING

(1) Requirement
Min 1 oz---Max 2 oz
to start code lever moving downward.

(2) Requirement
Power on generator clutch disengaged.
Min 3 oz---Max 5 oz
to operate keylever or spacebar.

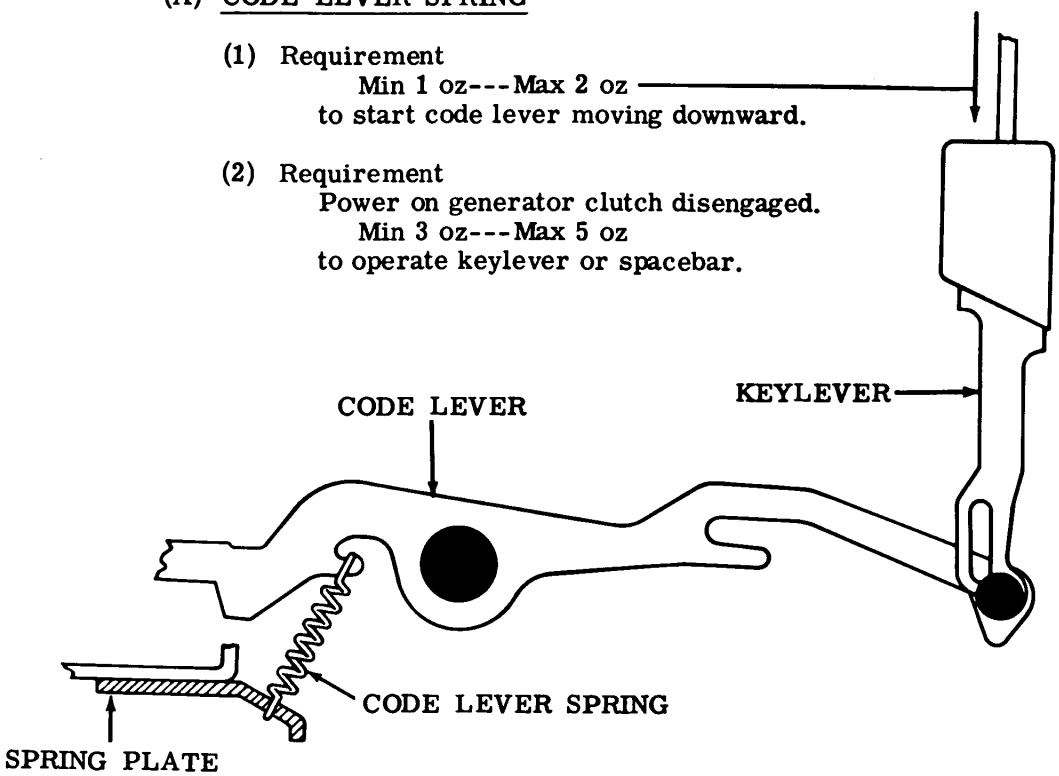

(B) LOCAL CARRIAGE RETURN FUNCTION BAIL SPRING
(COMBINED CODE LEVER AND BAIL SPRING)

Requirement
Min 1 oz---Max 3 oz
to move keylever downward.

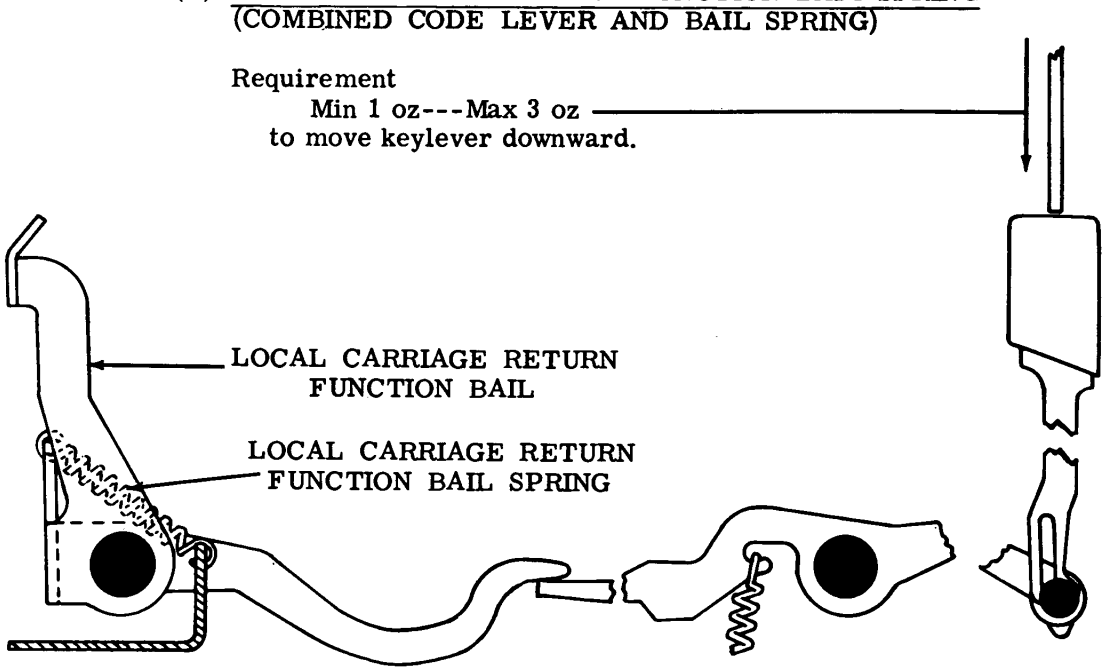

2.19 Codebar Assembly (continued)

(B) TRANSFER LEVER LOCKING BAIL SPRING

Requirement
Spring unhooked from post
Min 5 oz---Max 7 oz
to pull to installed length.

(A) TRANSFER LEVER SPRING

Requirement
Clutch disengaged
Min 1-1/2 oz---Max 2-1/2 oz
to start each of 10 levers moving.

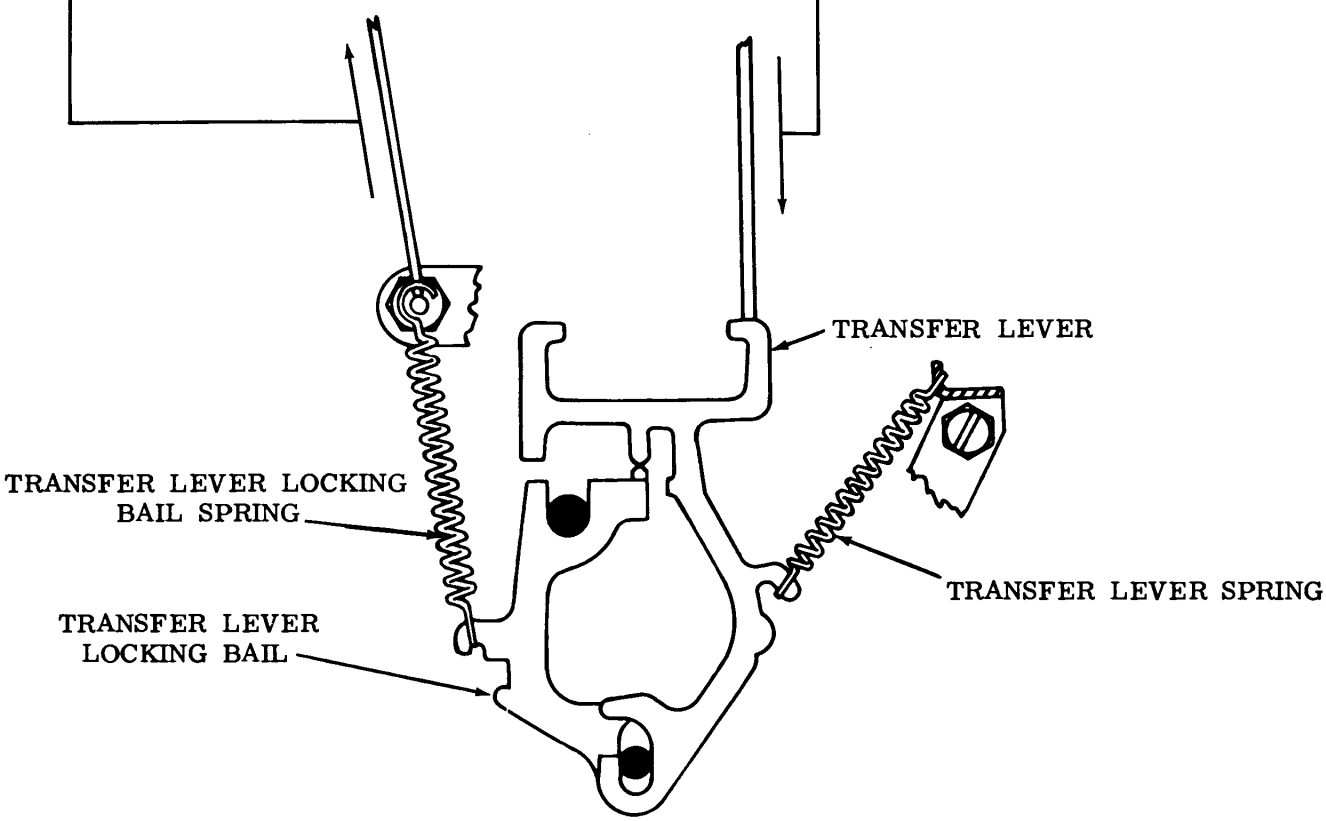

2.20 Interrelated Features

MARGIN INDICATOR SPRING

Requirement
Min 7 oz---Max 11 oz
to move lever up free of pin.

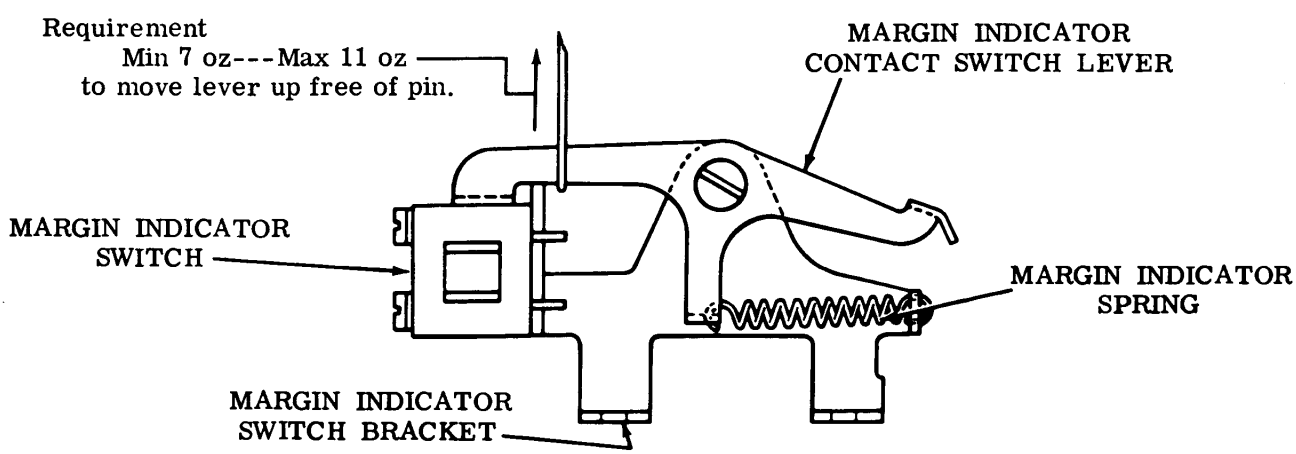

2.21 Interrelated Features (continued)

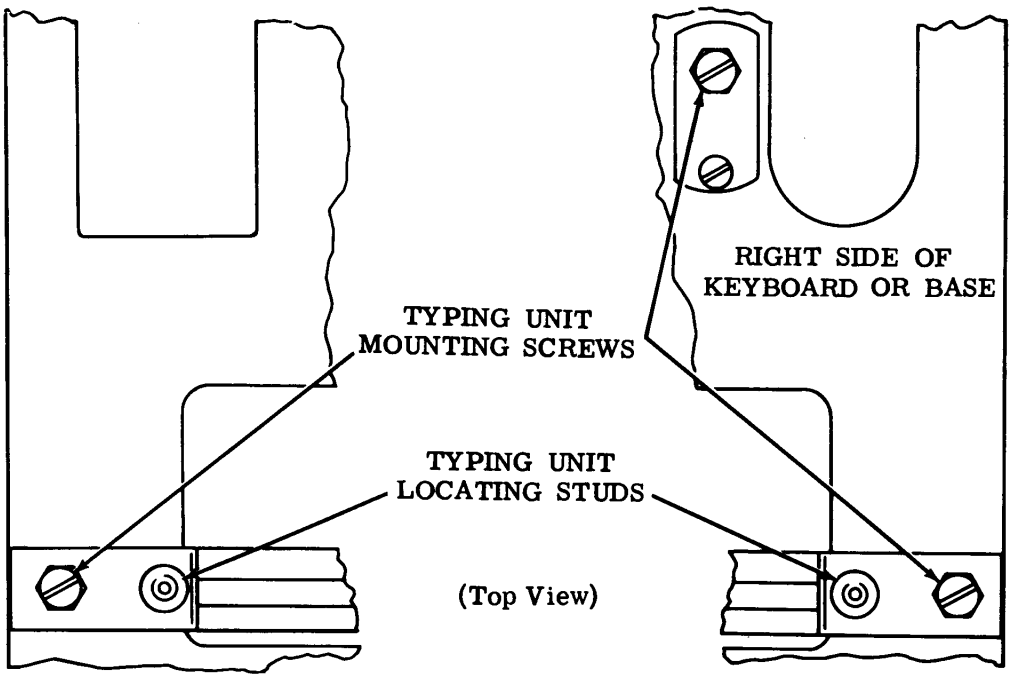

MOUNTING TYPING UNIT ON KEYBOARD

Requirement

When placing the typing unit on the base, hold it tilted slightly to the right. Lower the right end into engagement with the right locating stud. While easing the left end downward, rotate the motor by hand to properly mesh the gears. Secure by four mounting screws. Rotate the motor by hand to insure proper meshing of gears.

SIGNAL GENERATOR FRAME

Requirement

With typing unit mounted in position, there should be a perceptible amount of backlash between the signal generator driven gear and the signal generator driving gear at the point where backlash is the least.

To Adjust

Remove the signal generator frame rear mounting screw and loosen the shim screw. Add or subtract shims as required.

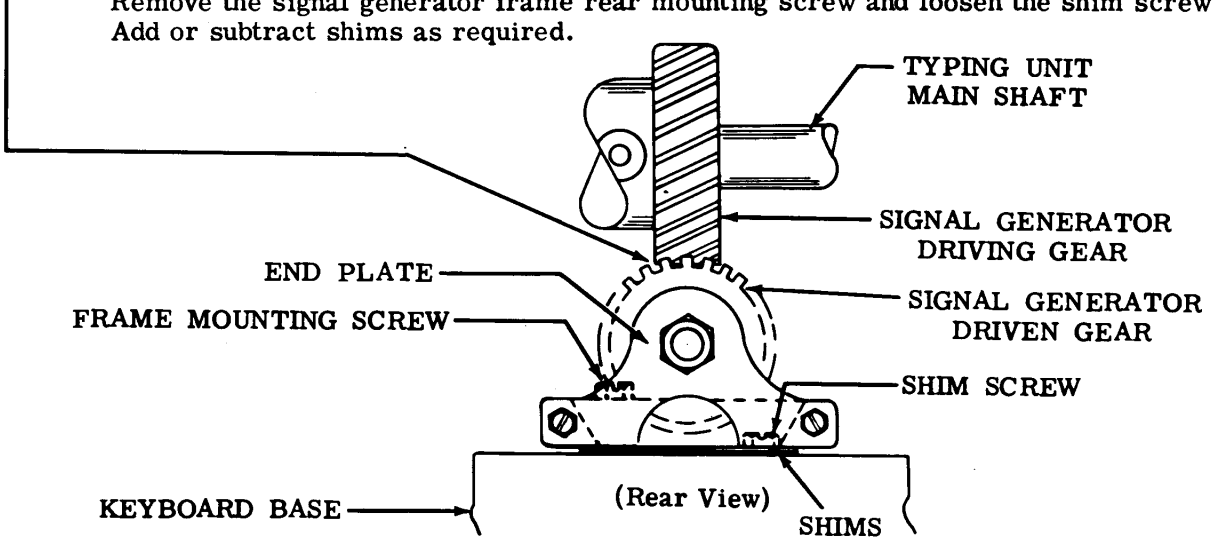

2.22 Interrelated Features (continued)

INTERMEDIATE GEAR ASSEMBLY

Requirement
Backlash between motor pinion and its driven gear, and between typing unit main shaft gear and its driving gear — Min 0.004 inch---Max 0.008 inch as gauged by feel.

To Adjust
Loosen intermediate gear assembly mounting screws (4). Loosen two locknuts which lock adjusting bushings at rear of assembly. Loosen nut plate mounting screw just in front of gear bracket. Move assembly backward or forward and adjust height at rear by means of adjusting bushing nearest motor (back out other bushing for clearance after correct adjustment is obtained). Lock adjusting bushing nut, turn other bushing with fingers until it touches base, and tighten locknut.

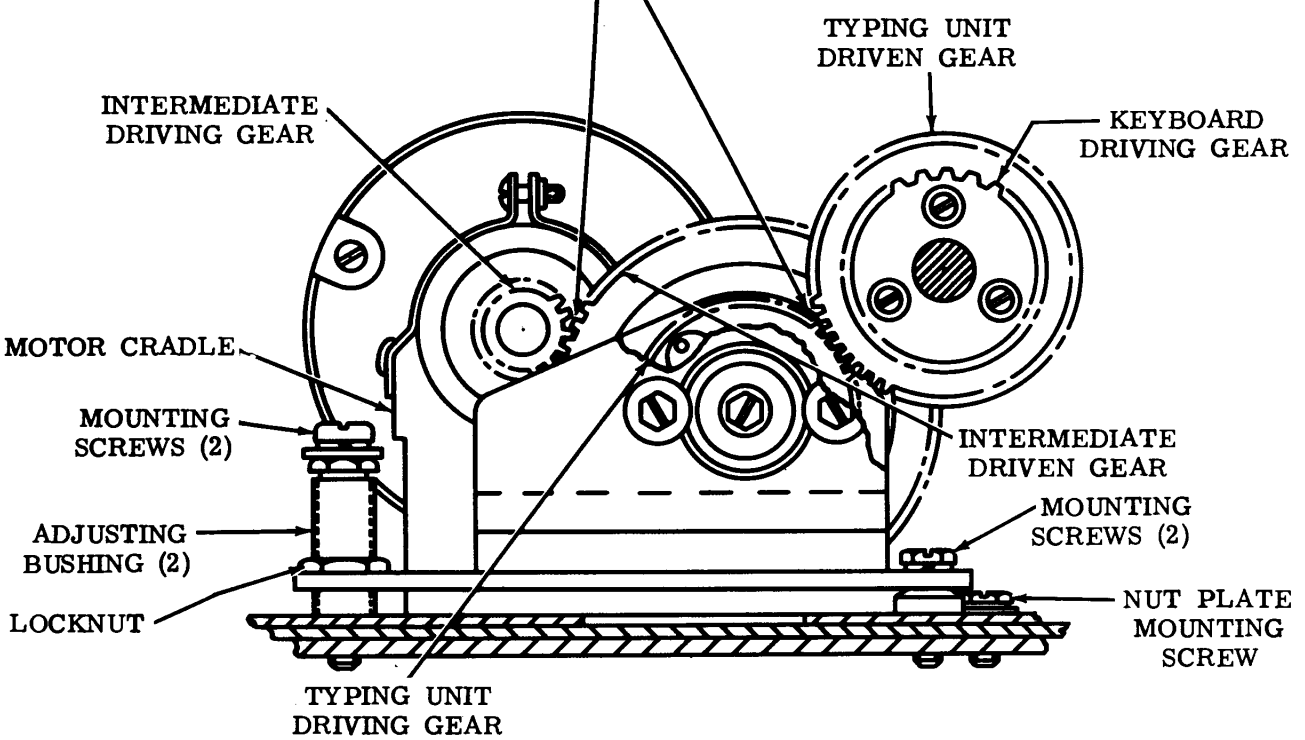

MOUNTING REPERFORATOR UNIT ON KEYBOARD (NOT ILLUSTRATED)

Requirement
The reperforator should be mounted so that the jack shaft is in alignment with rear bearing bracket shaft end and is perpendicular to rear motor shaft.

To Adjust
Loosen setscrews in flexible coupling and slide coupling out of engagement with rear bearing bracket shaft. Loosen two screws on alignment bracket. Loosen four reperforator mounting screws. Align reperforator jack shaft with rear bearing bracket shaft and tighten reperforator mounting screws. Snub alignment bracket against reperforator casting and tighten two screws. If the shafts are not in alignment at this point, adjust rear bearing bracket to left or right until shafts are in alignment. Position and fasten flexible coupling.

3. VARIABLE FEATURES

3.01 Timing Contact Mechanism (Early Design)

TIMING CONTACT

(1) Requirement
Contacts should be closed when nylon pad is raised 0.007 inch.
Contacts should be open when nylon pad is raised 0.015 inch.

To Check
Identification mark viewed on top side of hex and follower on low part of cam.

(2) Requirement
Min 0.003 inch gap between contacts with the follower on any peak of cam.
Min 0.0015 inch gap on units prior to serial #88,800.

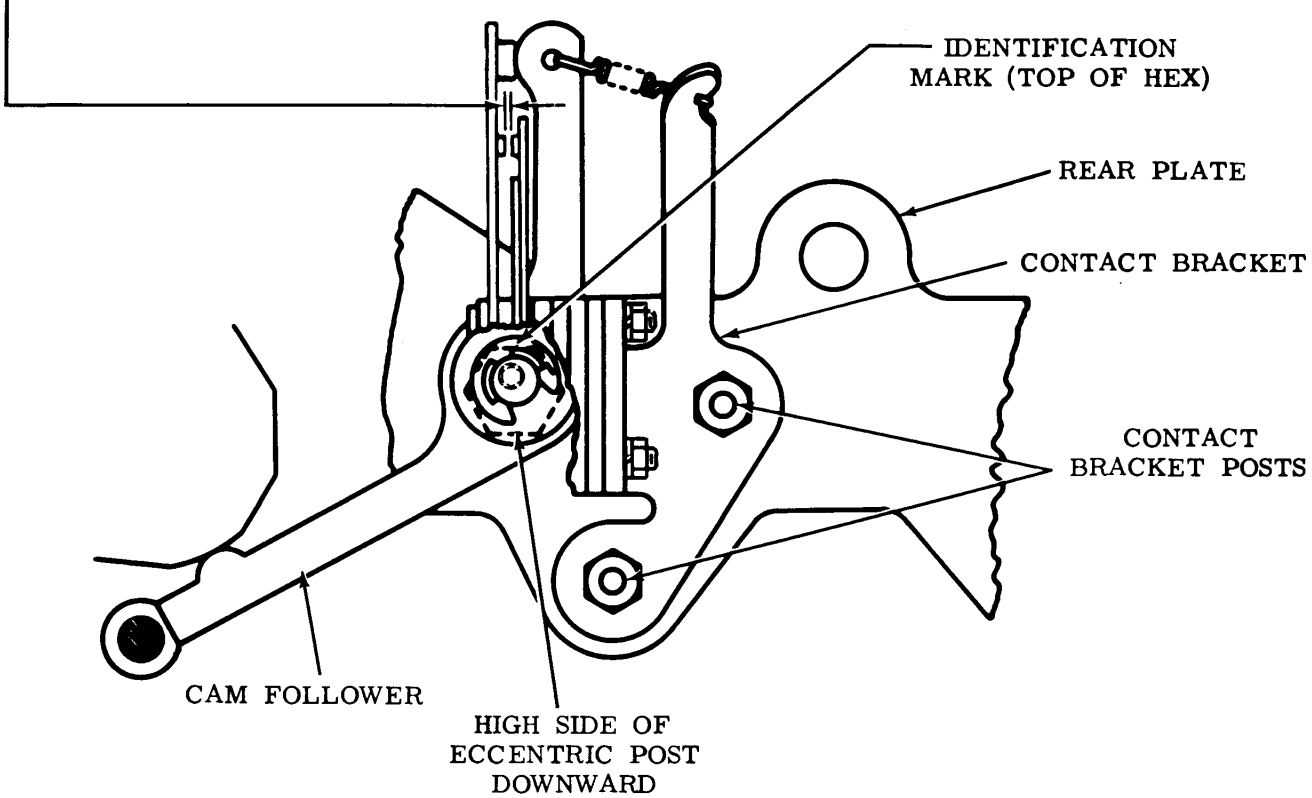

To Adjust
Loosen two timing contact bracket posts. With screwdriver between bracket upright and rear plate, adjust gap
Min some---Max 0.010 inch
adjust eccentric screw to meet requirements.

Note: Use signal checking device to refine this adjustment.

3.02 Timing Contact Mechanism (Early Design) (continued)

(A) CONTACT SWINGER

Requirement
Contacts closed
Min 2 oz---Max 3-1/2 oz
to just open contacts.

To Adjust
Use TP110455 spring bender.

(B) CAM FOLLOWER SPRING

Requirement
Signal generator latched. Contact spring held back
Min 6 oz
to start cam follower moving.

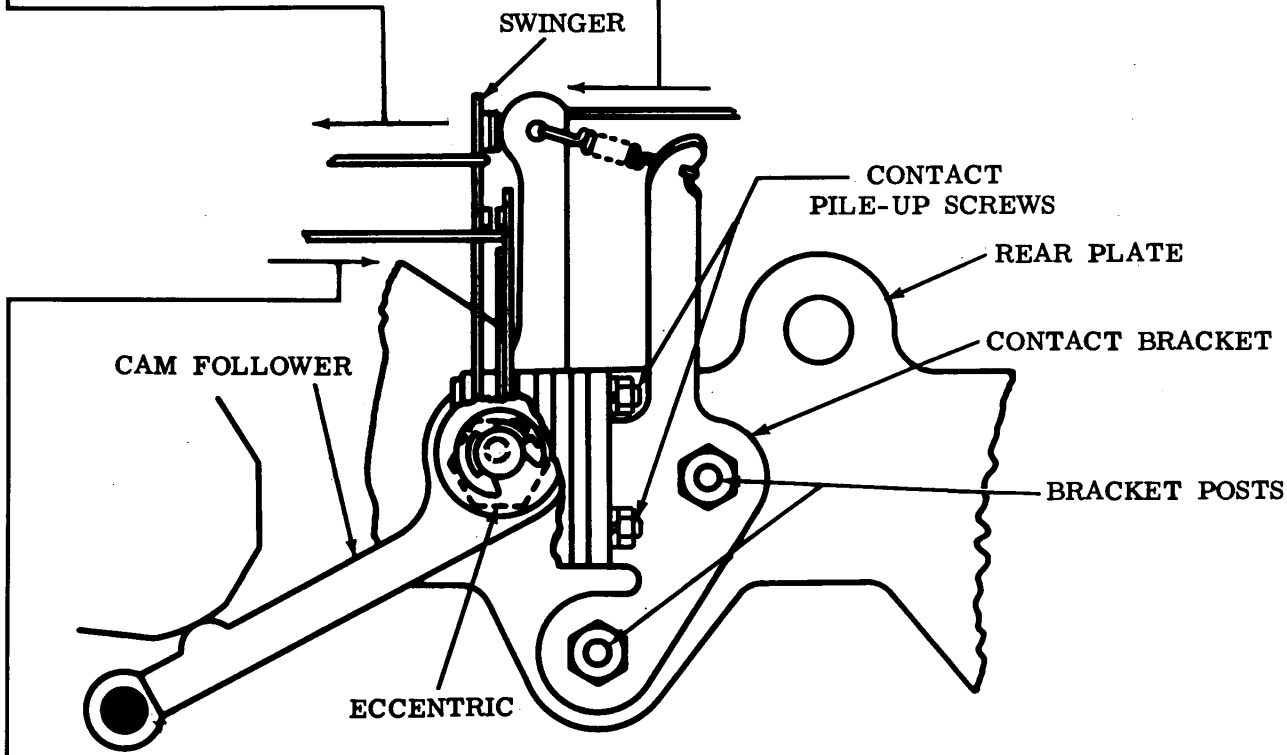

(C) CONTACT STIFFENER

Requirement
Contact open
Min 5 oz---Max 8 oz
to move contact.

To Adjust
Remove transparent contact guard. Remove contact assembly from unit by removing two posts securing it to rear plate. Loosen two screws holding contact pile-up to contact bracket. Bend contact using TP110445 spring bender.

Note: Check CONTACT SWINGER Par. 3.02 and refine if necessary. Remake Par. 3.01 if necessary.

3.03 Timing Contact Mechanism (Later Design)

TIMING CONTACT

(1) Requirement
With unit in the stop position, there should be a gap between contact points
Min 0.008 inch---Max 0.011 inch

(2) Requirement
With the cam follower on the low part of the cam, and the clearance taken up between the plunger and the cam follower, there should be some clearance between plunger and contact point.

To Adjust
Loosen the two posts holding the timing contact bracket to friction tightness. Position the bracket in order to meet (1) and (2) Requirements. Tighten the posts and recheck the adjustment.

Note: If available, use a signal checking device to refine the adjustment.

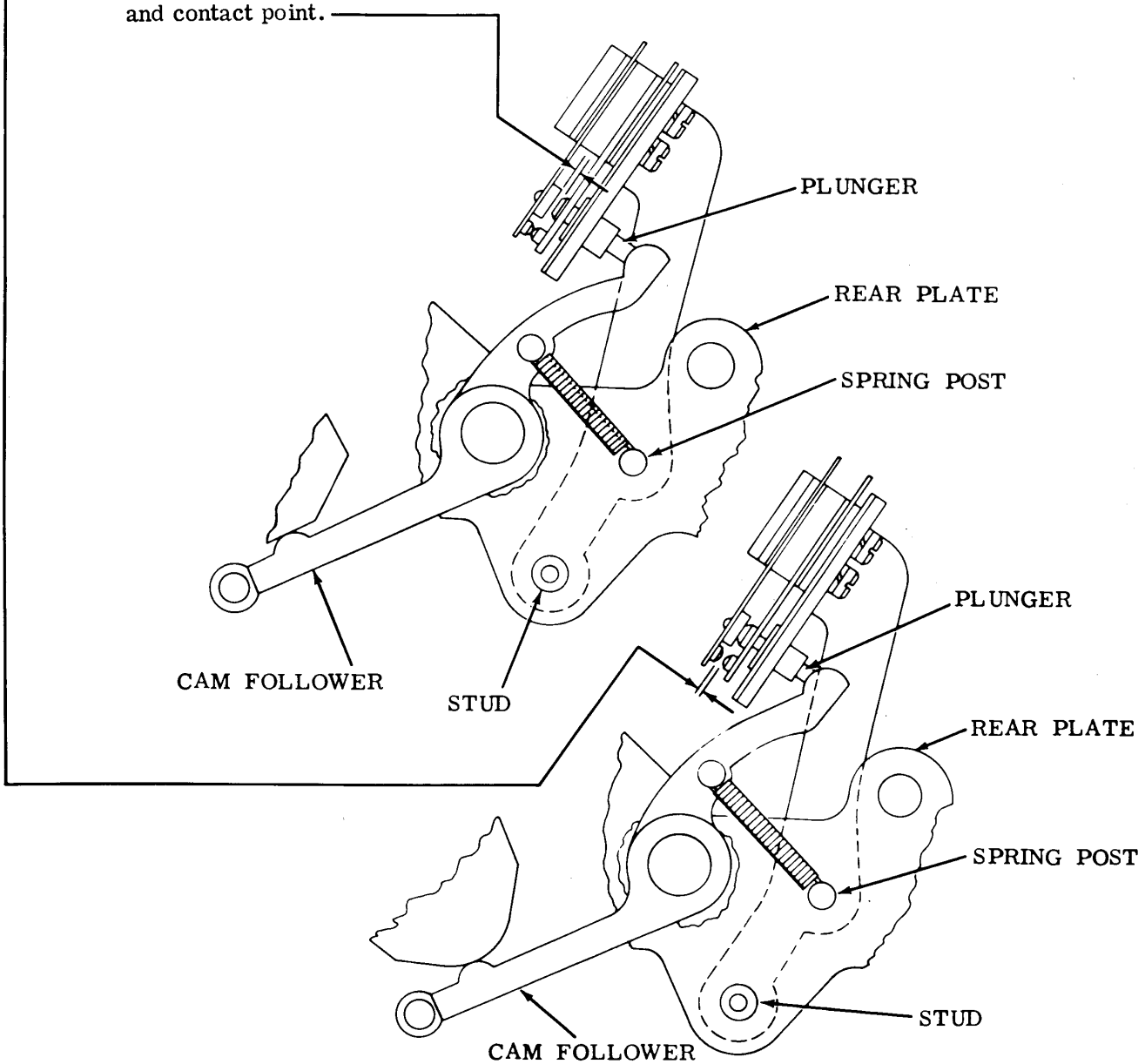

3.04 Timing Contact Mechanism (Later Design) (continued)

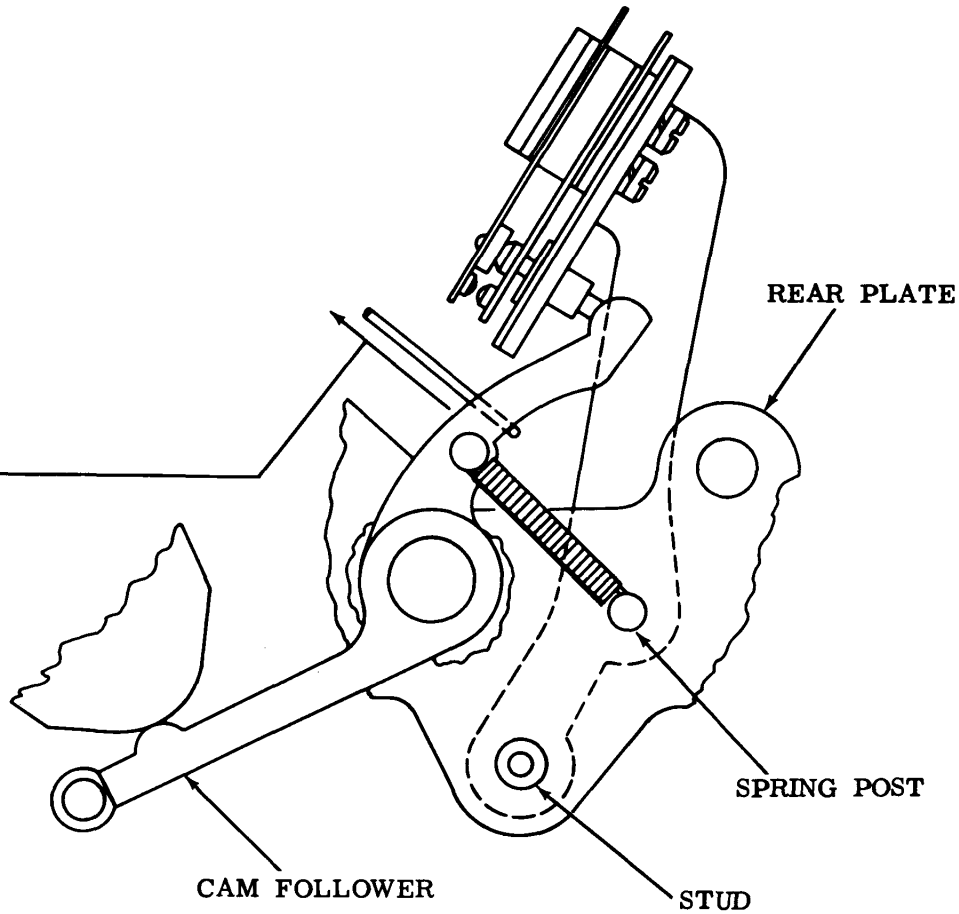

CAM FOLLOWER SPRING

To Check

Timing contact assembly must be moved out of contact with the cam follower, and spring post must be tightened to check this requirement and TIMING CONTACT SWINGER SPRING adjustment.

Requirement

With the signal generator in the latched position, apply the pull end of the scale to the cam follower.

Min 6 oz---Max 9 oz

to start cam follower moving.

3.05 Timing Contact Mechanism (Later Design) (continued)

TIMING CONTACT SWINGER SPRING

(1) Requirement
Contact points should be in line and the head of the plunger should be centered in its hole in the spring as gauged by eye.

To Adjust
Position contact springs with screws friction tight. Tighten screws.

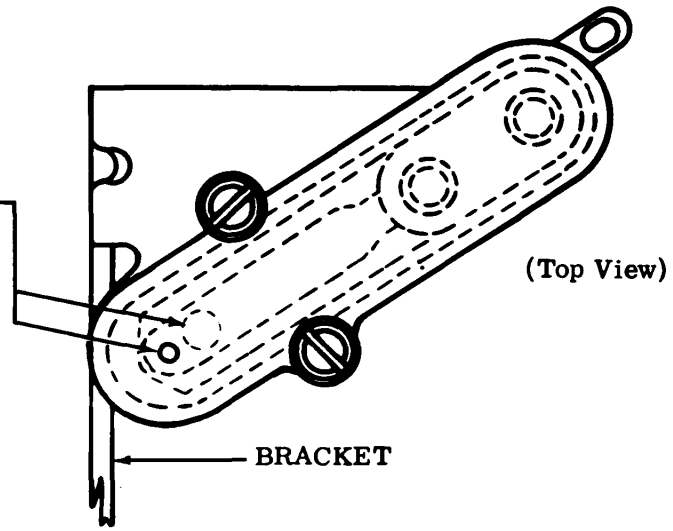

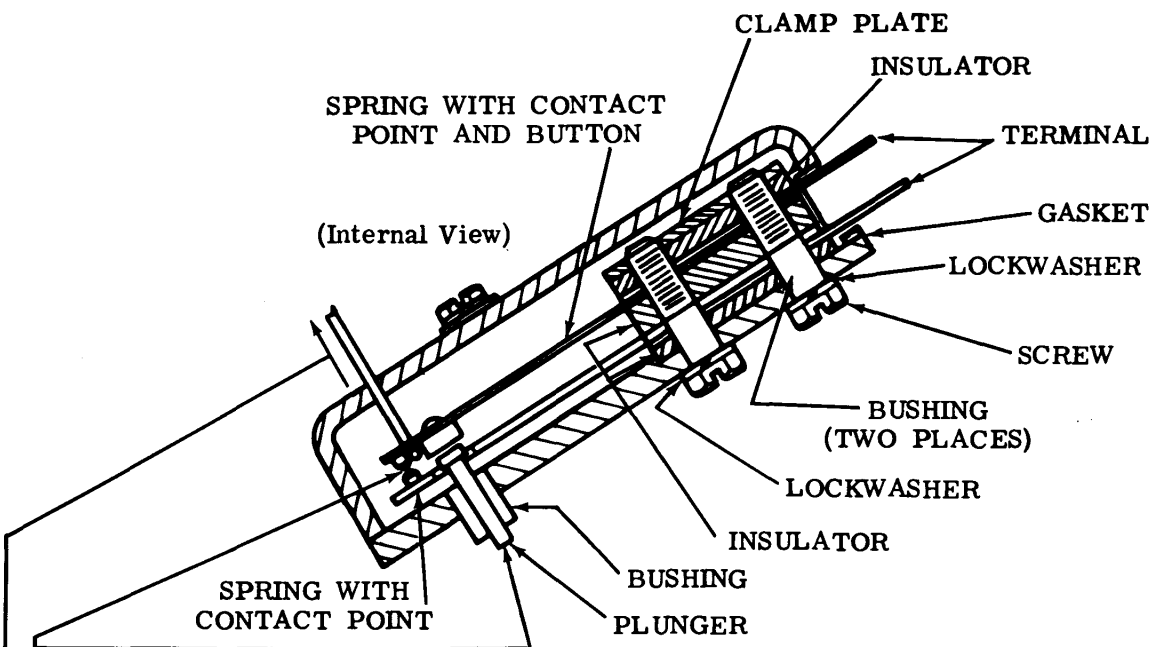

(2) Requirement
With plunger depressed flush with its bushing, contact cap should be Min 0.045 inch---Max 0.065 inch

To Adjust
Bend spring.

(3) Requirement
With contacts closed Min 3-1/2 oz---Max 4-1/2 oz to just open contacts.

To Adjust
Bend spring. Recheck timing contact adjustment.

3.06 Timing Contact Mechanism (continued)

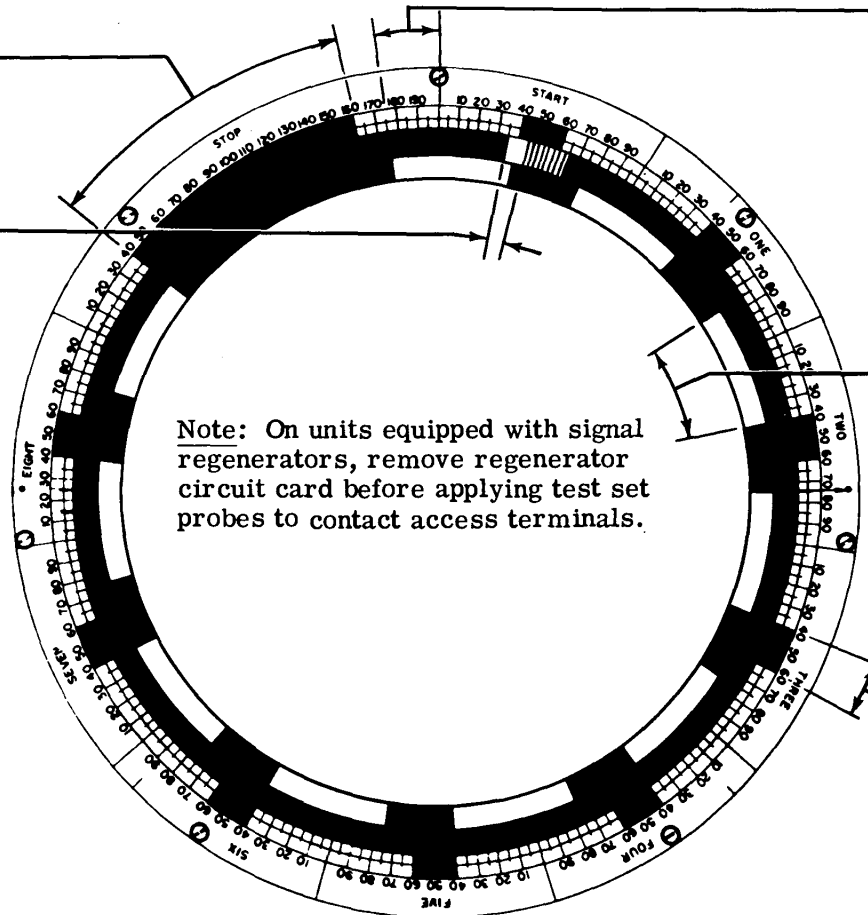

Note: On units equipped with signal regenerators, remove regenerator circuit card before applying test set probes to contact access terminals.

TIMING CONTACT (STROBING)

(1) Zero the test set as described in procedure (1) of Par. 2.17.

(2) The light image of the timing contacts should meet the following requirements for speeds up to and including 100 words per minute.

(A) Open for a minimum of 20 divisions between the 25 division and 75 division points of each 100 division pulse.

(B) Open for a minimum of 120 divisions between the 25 division and 175 division points of the stop pulse.

(C) The close to open transitions should be in multiples of 100 divisions ±5 divisions of the start pulse.

(D) There should be no contact break between the zero division point and the close to open transition point, and no contact break between the 75 division point and the 100 division point of each pulse. There should be no contact break between the 175 division point and the 200 division point of the stop pulse.

To Adjust

Check and refine, if necessary, adjustment in Par. 3.01.

Note: The timing contacts should be open when the clutch is disengaged.

3.07 Local Backspace Mechanism

TRANSFER BAIL ADJUSTING LEVER

Requirement
Downward pressure on backspace key
Min 16 oz---Max 28 oz
to operate backspace lever.

To Adjust
Position transfer bail adjusting lever with its mounting screw loosened. If unit is forward spacing, the adjusting lever must be raised until proper backspacing is accomplished.

Note 1: This adjustment may require remaking when a different typing unit is used.

Note 2: The camming bail should return to its unoperated position when the key-lever is released. Refine adjustment if necessary.

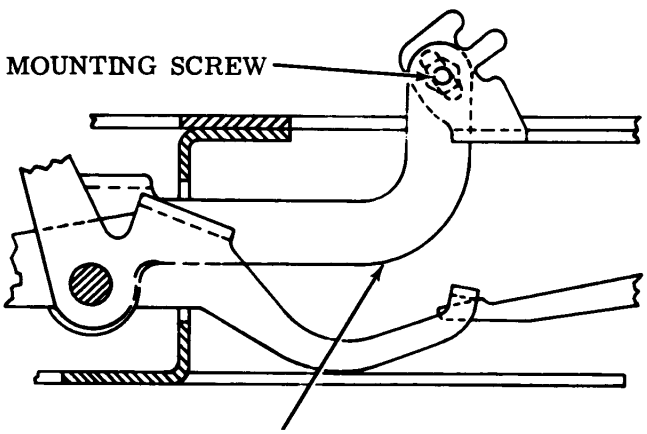

TRIP LINK HORIZONTAL SPRING

Requirement
Unhook spring
Min 1-3/4 oz---Max 3 oz
to pull spring to installed length.

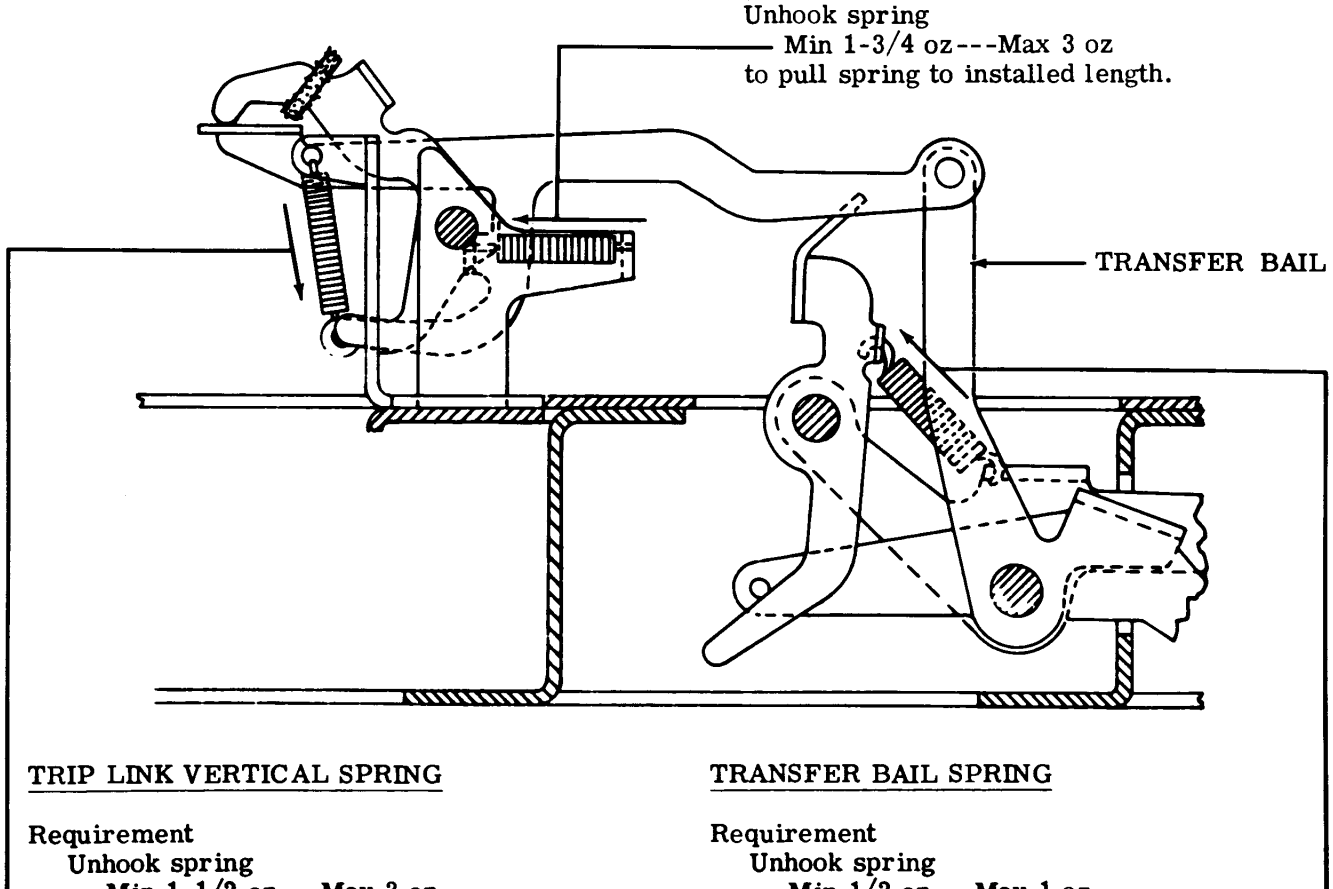

TRIP LINK VERTICAL SPRING

Requirement
Unhook spring
Min 1-1/2 oz---Max 3 oz
to pull spring to installed length.

TRANSFER BAIL SPRING

Requirement
Unhook spring
Min 1/2 oz---Max 1 oz
to pull spring to installed length.

3.08 Receive-Break Switch Mechanism

RECEIVE-BREAK SWITCH

Requirement
The bail should operate the contact pile-up with some overtravel.

To Check
Keyboard lock plunger in downward position. Function bail latched.

To Adjust
Loosen lock nut on adjusting screw and position screw. Recheck for overtravel.

RECEIVE-BREAK SWITCH TENSION

Requirement
Normally open contacts should close and normally closed contacts should open
Min 10 oz---Max 16 oz

To Adjust
Bend leaves carefully to meet requirements.

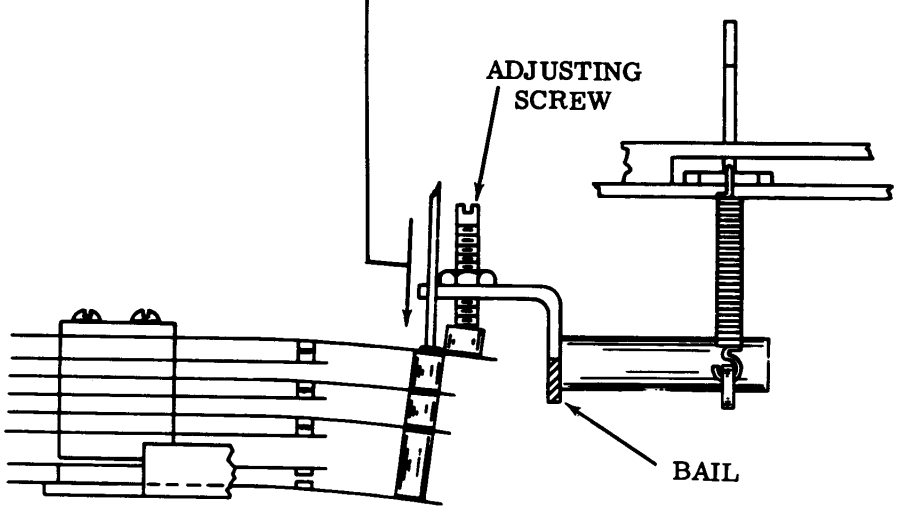

3.09 Codebar Arrangement for Even Parity

CLUTCH TRIPBAR SPRING

Requirement
Clutch disengaged. Power off.
Min 8 oz---Max 12 oz
to move bar.

CODEBARS, SHIFT AND CONTROL LOCKBAR, COUNTER AND RETURN BAR SPRINGS

Requirement
Depress rubout or delete key.
Power off. Transfer levers held right
Min 5 oz---Max 7-1/2 oz
(no. 4, 5, 7, and 8 codebars)
Min 2 oz---Max 4 oz
(all remaining bars)
to start bar moving.

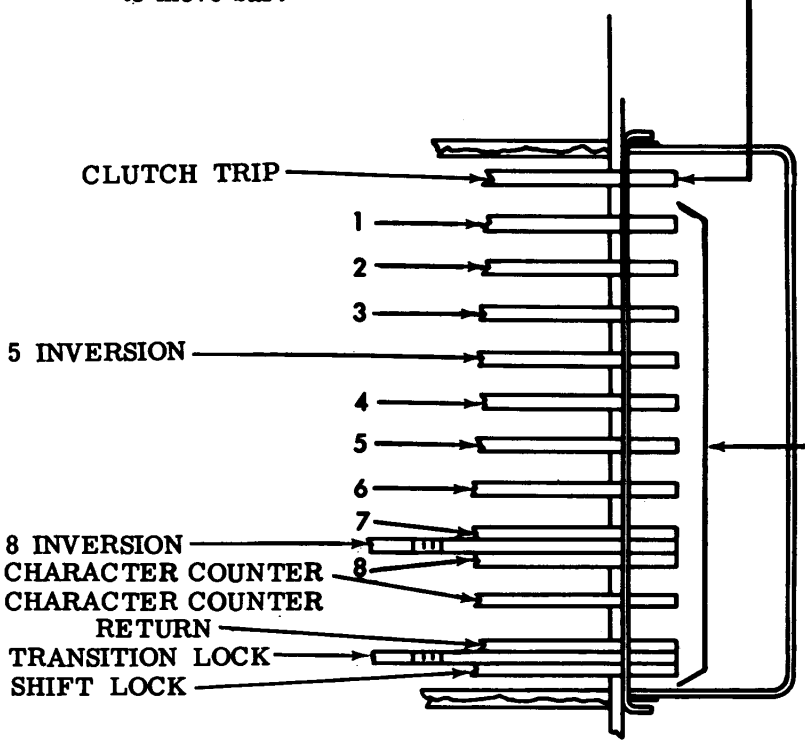

NO. 5 AND NO. 8 INVERSION BAR SPRING

Requirement
Codebar in latched position.
Unhook spring at guide
Min 6 oz---Max 8 oz
to pull to installed length.

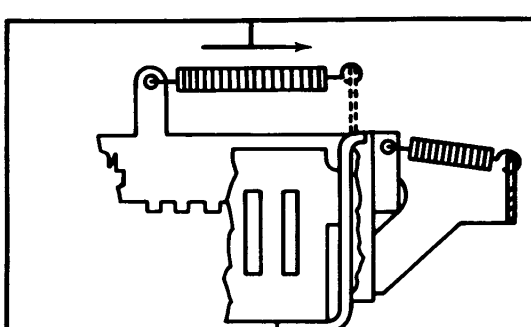

TRANSITION BAR SPRING

Requirement
Unhook spring at guide
Min 1/2 oz---Max 1-1/2 oz
to pull to installed length.

3.10 Local Single Line Feed Mechanism

TRIP LINK VERTICAL SPRING

Requirement
Unhook spring
Min 4 oz---Max 5 oz
to pull spring to installed length.

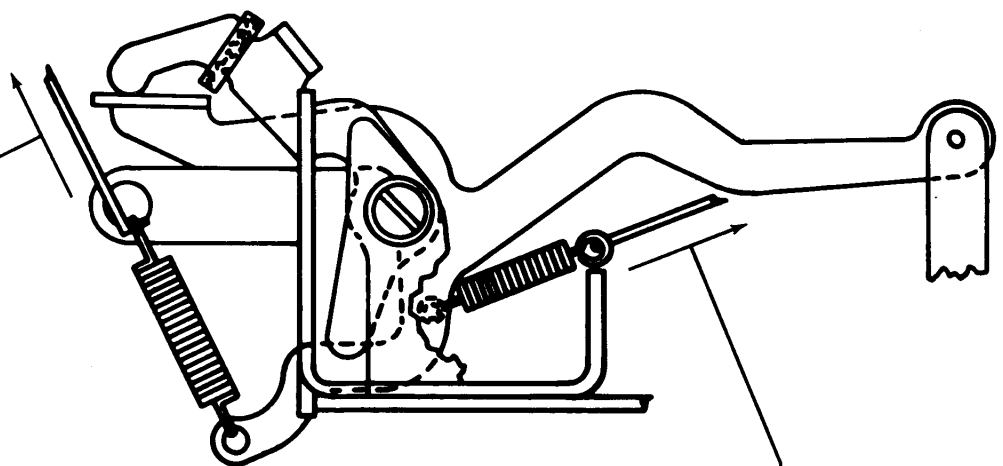

(Left View)

TRIP LINK HORIZONTAL REAR SPRING

Requirement
Unhook spring
Min 1-1/2 oz---Max 3-1/2 oz
to pull spring to installed length.

TRIP LINK FRONT SPRING

Requirement
Unhook spring
Min 1-1/2 oz---Max 2-1/2 oz
to pull spring to installed length.

3.11 Reperforator Backspace Actuating Switch Mechanism

OPERATING PAD GAP

Requirement
Depressing LOC BSP key should close normally open reperforator backspace actuating switch.

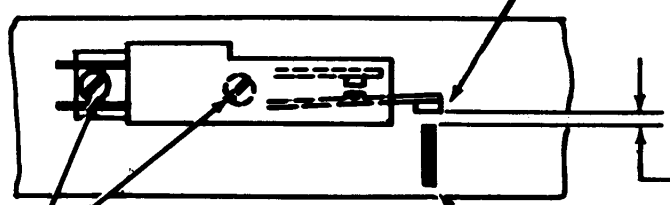

To Adjust
Check with ohmmeter, shift switch assembly on mounting holes.

Note: Ideal condition exists when printer and reperforator backspace simultaneously. To achieve, adjust by trial and error with printer and reperforator mounted. If reperforator backspaces before printer, increase gap between contact operating pad and backspace operating bail. If printer backspaces first, decrease gap.

3.12 Keyboard Universal Contact Mechanism

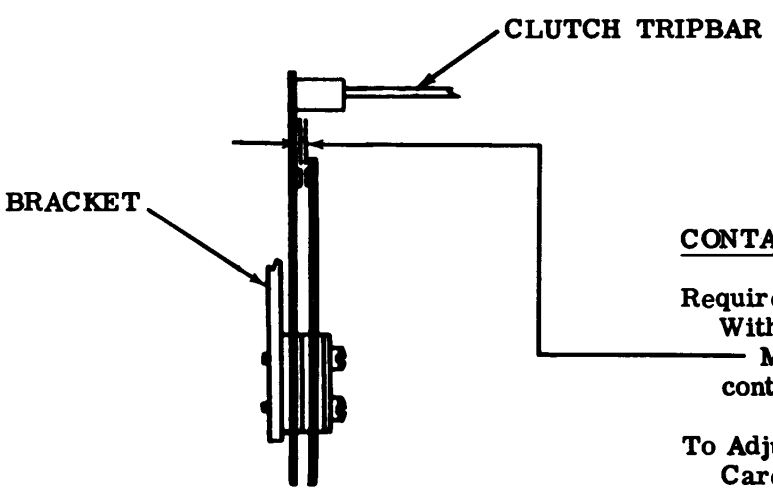

CONTACT GAP

Requirement
With clutch latched
Min 0.010 inch---Max 0.020 inch contact gap.

To Adjust
Carefully bend contact spring to meet requirement.

3.13 Tape Alarm

TAPE ALARM SWITCH

Requirement
Switch should operate when roll of tape is reduced in diameter
Min 2-3/8 inch---Max 2-1/2 inch

To Adjust
With switch assembly mounting screws loosened, position assembly in tape container to meet requirement. Bend tape arm if necessary.

TAPE ARM SPRING

Requirement
Hook spring scale over tape lever and pull in line with spring
Min 6 oz---Max 10 oz
to release spring.

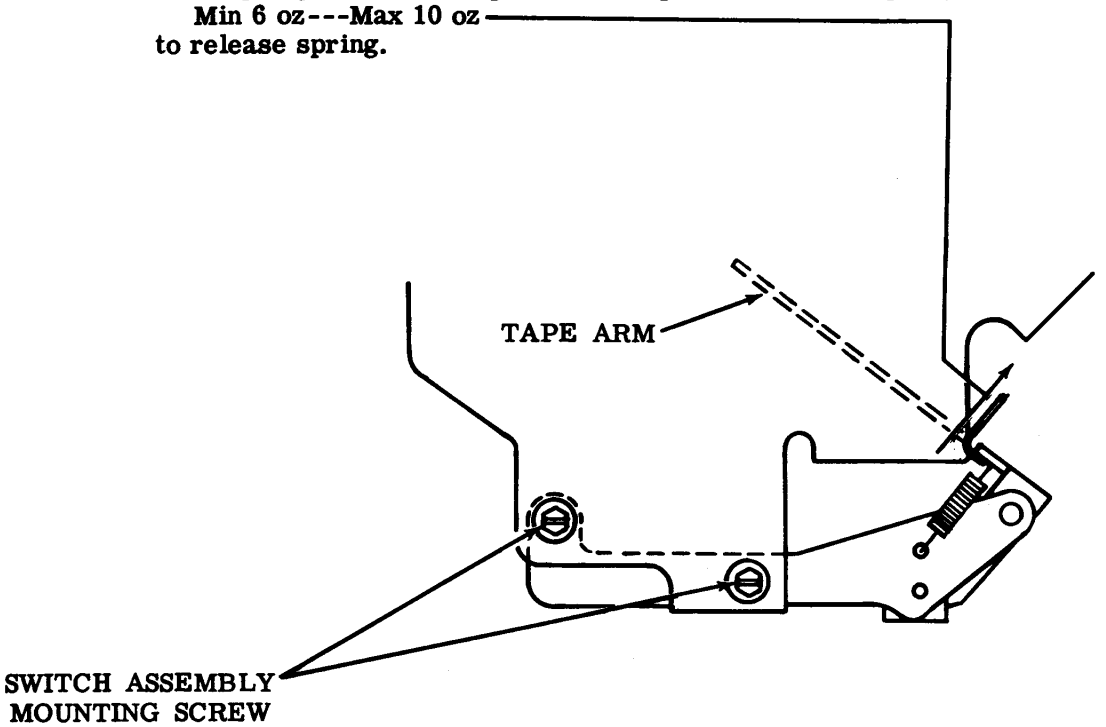

3.14 Character Counter Mechanism

Note: Character counter adjustments may be facilitated by removing the assembly from the keyboard except for Par. 3.16, character counter stroke.

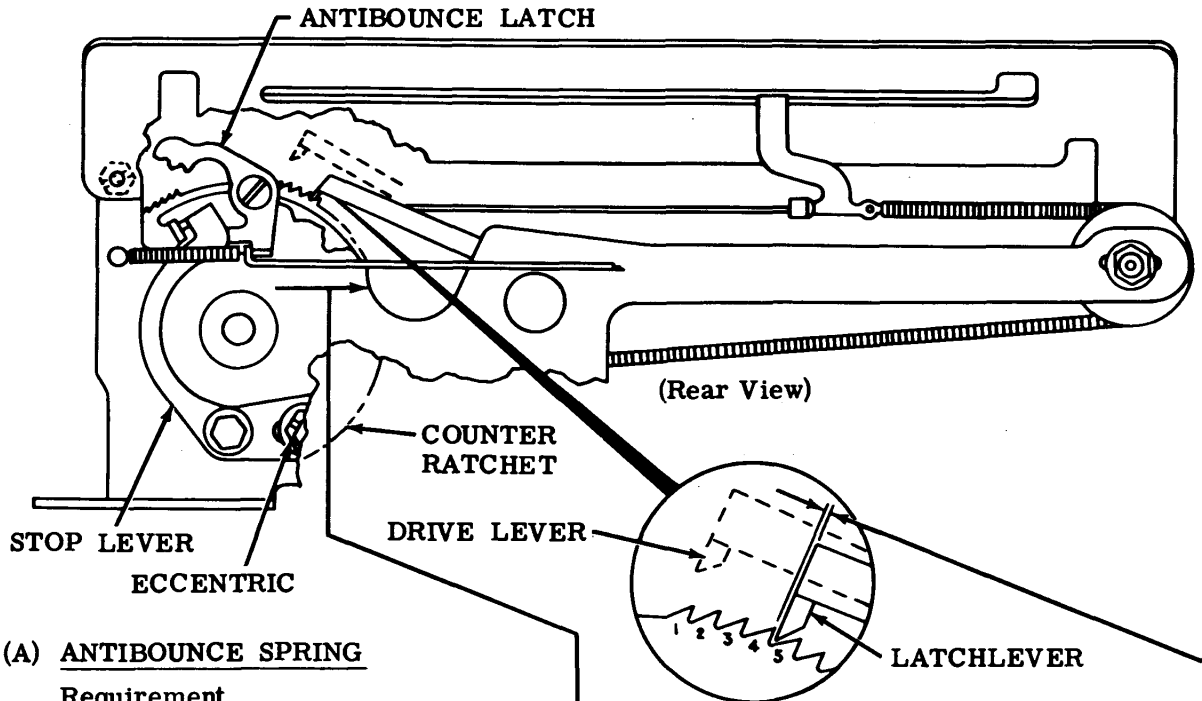

(A) ANTIBOUNCE SPRING

Requirement
Min 25 grams---Max 35 grams to pull latch to the end of its travel.

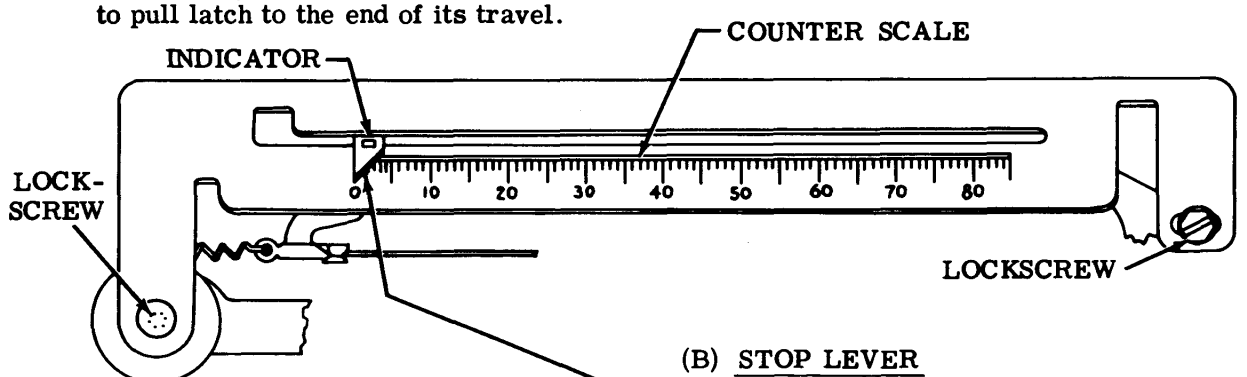

(B) STOP LEVER

(1) Requirement
With the counter ratchet fully returned and resting against its stop lever, the clearance between the latchlever and the face of the fourth ratchet tooth should be
Min 0.002 inch---Max 0.010 inch

(2) Requirement
The antibounce latch should not interfere with the rotation of the ratchet.

To Adjust
Hold the drive lever out of engagement with the ratchet and rotate the stop lever eccentric.

(C) CHARACTER COUNTER SCALE

(1) Requirement
When indicator is at extreme left of scale, it should point to zero.

To Adjust
Set indicator to left. Loosen lock-screws and position scale.

(2) Requirement
Point of indicator should not touch throughout its entire travel.

To Adjust
Form the indicator.

3.15 Character Counter Mechanism (continued)

(A) RATCHET DRUM ASSEMBLY RETURN SPRING

Requirement

Min 1/2 oz---Max 1-1/2 oz
when indicator points to 35 on the scale.

Min 1-1/2 oz---Max 2-1/2 oz
when indicator points to 70 on the scale.

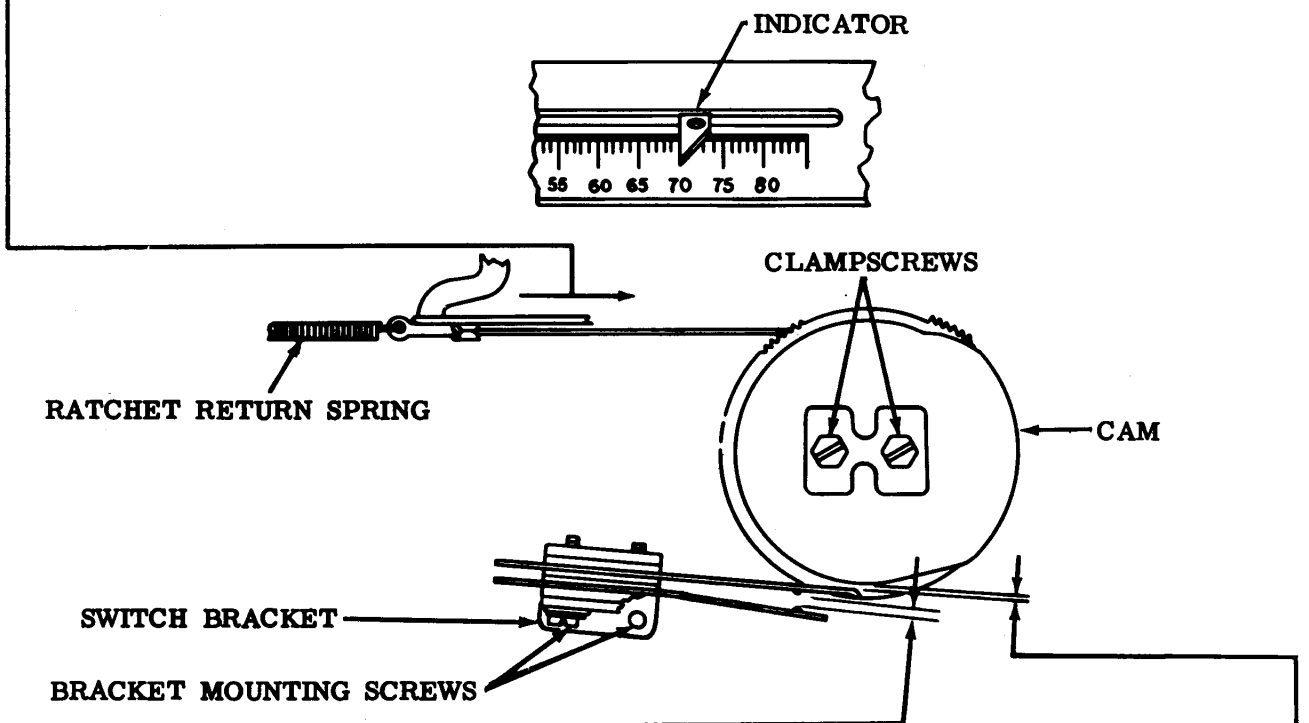

(B) END-OF-LINE SWITCH

(1) Requirement

Switch leaves should be approximately parallel to switch mounting bracket as gauged by eye. Upper switch leaf should clear low part of cam at closest point.

Min some---Max 0.025 inch

To Adjust

Loosen switch bracket mounting screws and position assembly.

(2) Requirement

Clearance between contacts of switch leaves should be

Min 0.005 inch---Max 0.020 inch

To Adjust

Bend lower leaf of switch.

(3) Requirement

Switch should close at a preset number of characters with a small amount of overtravel by both contact leaves.

To Adjust

Set indicator to count desired. Loosen clampscrews and adjust cam until switch just closes. Tighten screws. Check operation and refine 1, 2, and 3 if necessary.

3.16 Character Counter Mechanism (continued)

(A) CHARACTER COUNTER STROKE

Requirement - Mount Assembly on Keyboard

When character and REPEAT keys are depressed, the counter should operate consistently in T or K-T position. When CARRIAGE RETURN key is depressed, the counter should reset without binding. The mechanism should count the first character on a restart after reset condition.

Min 0.006---Max 0.015 inch between drive lever and ratchet tooth, when counter is set near midpoint of its range.

To Adjust

Loosen mounting screws. With keyboard in T position, start motor and strike CARRIAGE RETURN key, and then E key. Turn off motor. Depress E key. Position character counter frame for clearance. Turn control knob to K-T position and recheck. Refine if necessary.

(B) RESET LATCHLEVER AND DRIVE LEVER SPRING

Requirement

Min 1/2 oz---Max 1 oz to move either lever.

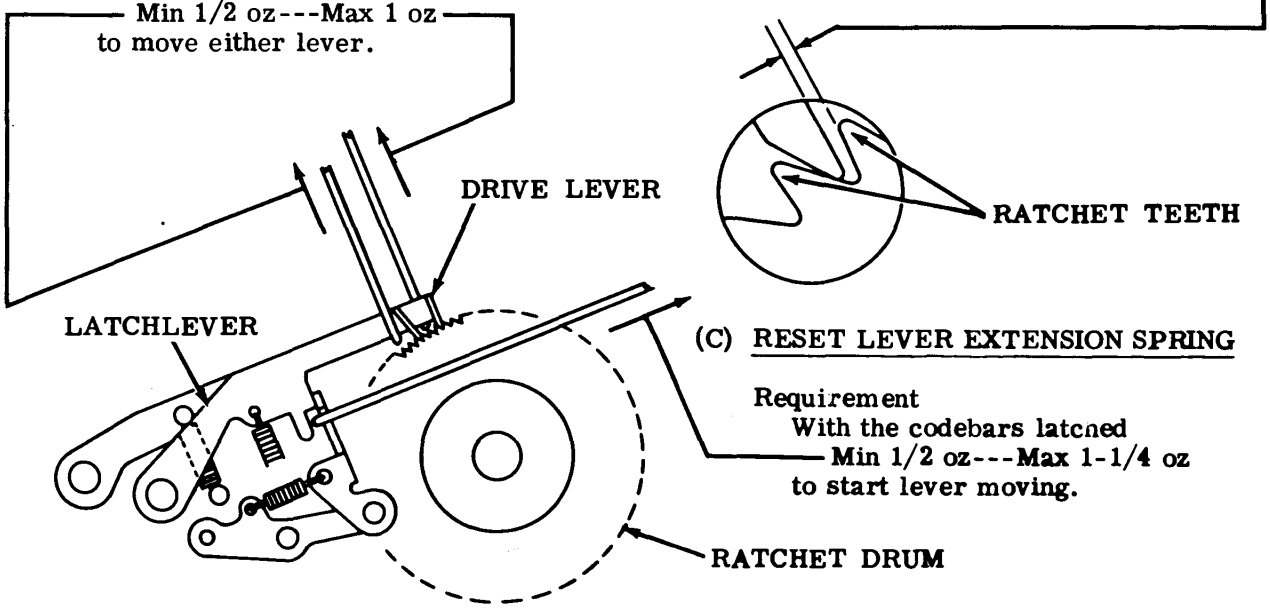

(C) RESET LEVER EXTENSION SPRING

Requirement

With the codebars latched

Min 1/2 oz---Max 1-1/4 oz to start lever moving.

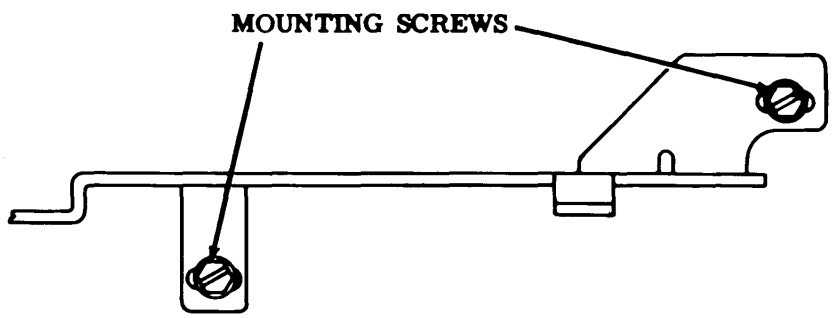

3.17 Auxiliary Contact Mechanism

CONTACT GAP

Requirement
Clutch latched, cam follower on high part of cam.
Contact gap should be
Min 0.005 inch---Max 0.015 inch

To Adjust
Loosen posts that hold contact bracket. Position bracket by use of screwdriver placed between bracket upright and rear plate.

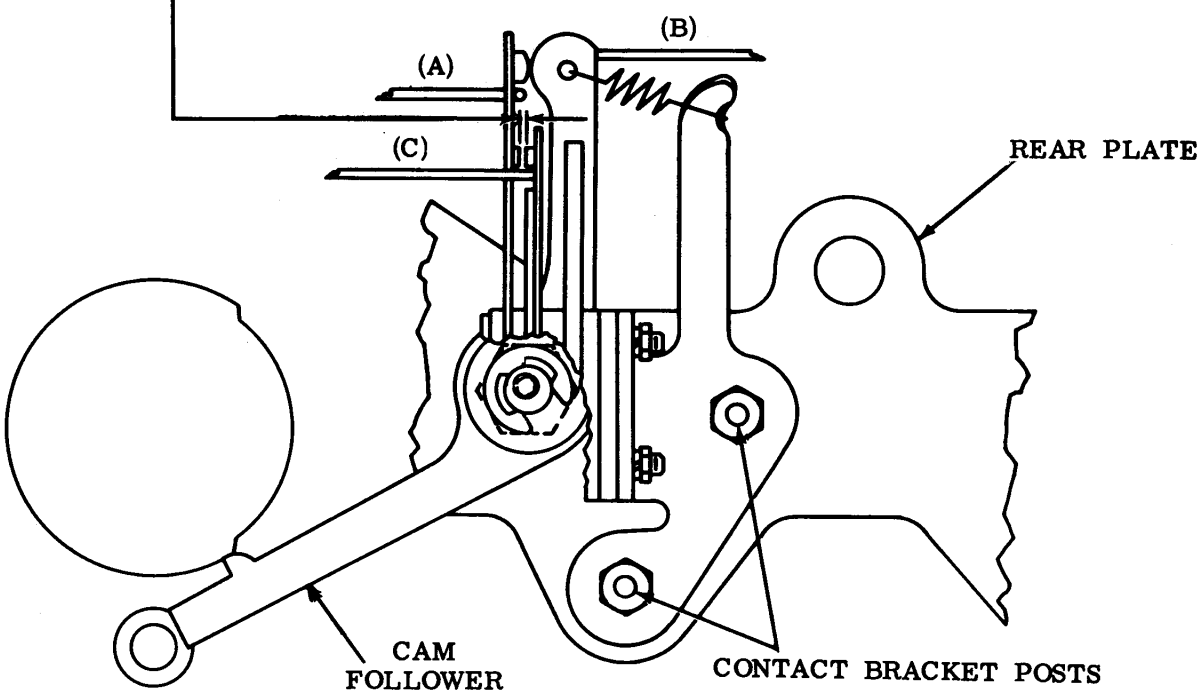

See Par. 3.02 for requirements of:

(A) CONTACT SWINGER
(B) CAM FOLLOWER SPRING
(C) CONTACT STIFFENER

See Par. 3.23 for AUXILIARY CONTACT REFINEMENT (STROBING).

3.18 Code Reading Contact Mechanism

Note 1: Adjustments on this page should be made with the contact assembly removed from the keyboard.

Note 2: Each adjustment should start with the contact pile-up farthest from the handle of the bending tool. See Par. 3.19.

(A) BACKSTOP - NORMALLY CLOSED CONTACT

Requirement
Normally closed contact leaf should be parallel to mounting plate and align with each other by 0.010 inch.

To Adjust
Bend backstop.

(D) NORMALLY OPEN CONTACT GAP

Requirement
Min 0.018 inch---Max 0.030 inch normally open gap.

To Adjust
Bend backstop.

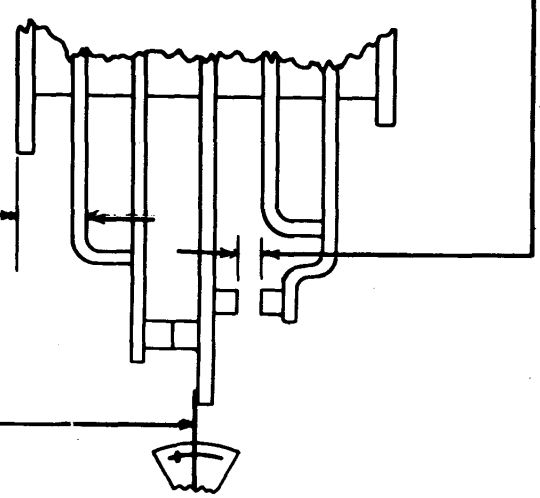

(C) CONTACT SWINGER SPRING

Requirement
Min 30 grams---Max 40 grams to open the closed contact.

To Adjust
Bend swinger.

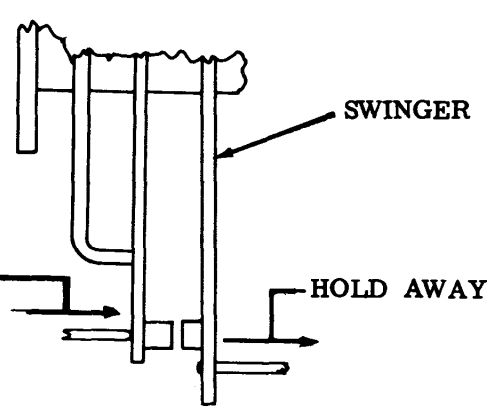

(B) NORMALLY CLOSED CONTACT SPRING

Requirement
Min 2 oz---Max 6 oz to move contact spring away from backstop. Hold swinger away from closed contact.

To Adjust
Bend spring. To increase tension against backstop, bend backstop away from spring leaf and form leaf toward backstop, then reposition backstop per BACKSTOP-NORMALLY CLOSED CONTACT Par. 3.18.

3.19 Code Reading Contact Mechanism (continued)

ADJUSTING CODE READING CONTACTS

(1) The contact assembly should be removed from the keyboard to perform the adjustments of Par. 3.18. It is not necessary to remove the wires from the assembly.

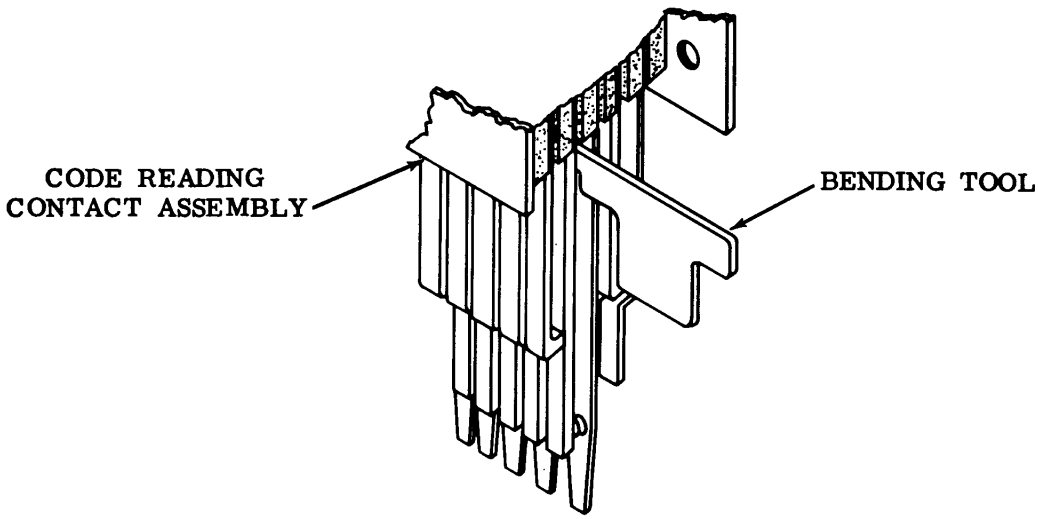

(2) Each adjustment should start with the contact pile-up farthest from the handle of the bending tool.

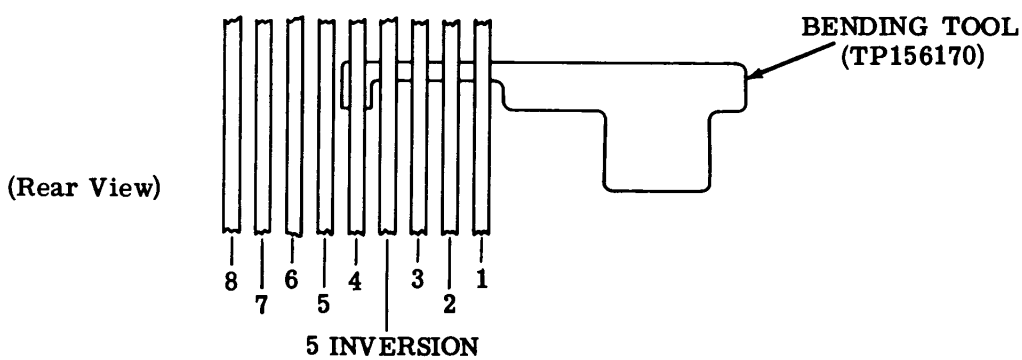

(3) After adjusting contact pile-ups 4, 5I, 3, 2, and 1, insert the bending tool in the opposite side of the assembly and adjust contact pile-ups 5, 6, 7, and 8 in the order given.

3.20 Code Reading Contact Mechanism (continued)

Note: Perform LATCHLEVER SPRING. Then install contact assembly on the keyboard for the remaining code reading contact adjustments.

(B) MARKING CONTACT GAP

Requirement
With the clutch latched
Min 0.005 inch---Max 0.015 inch
contact gap.

To Adjust
Loosen four contact mounting bracket screws.
Position contact adjustment mounting bracket.

CAUTION: DO NOT APPLY FORCE TO CONTACT PILE-UP.

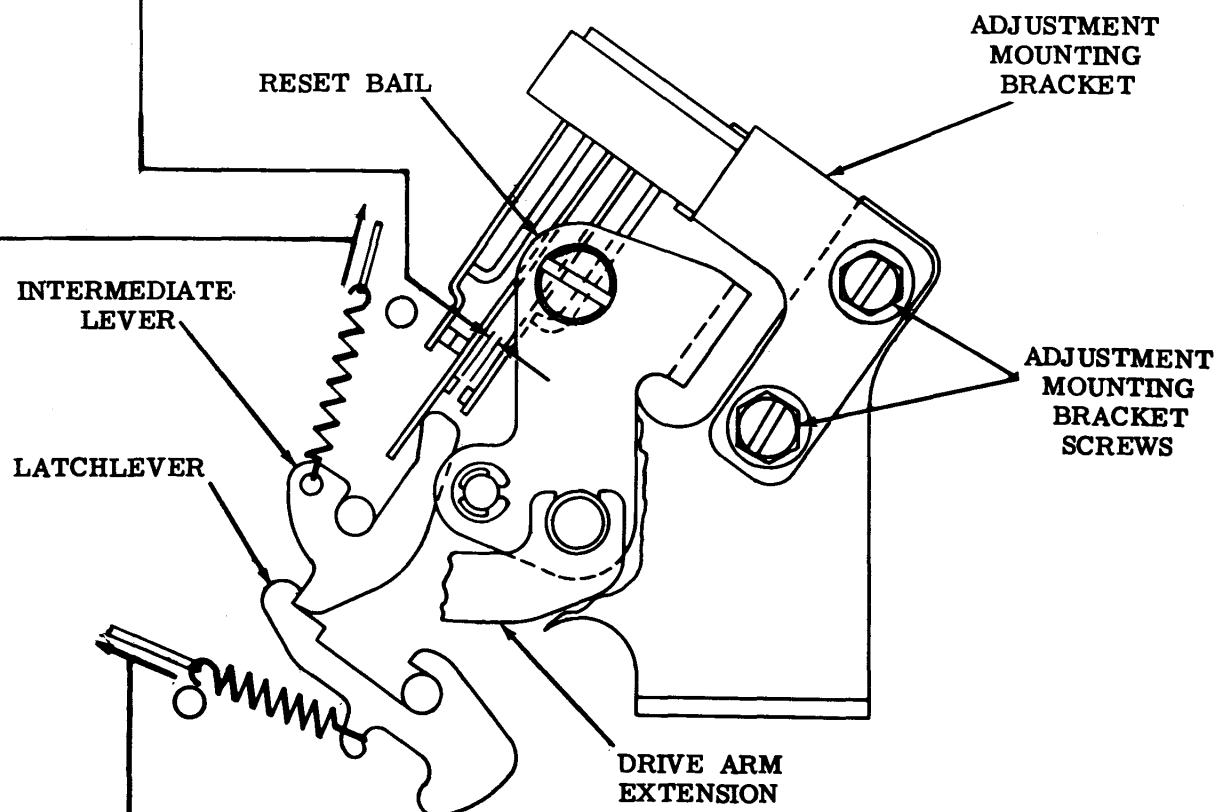

(C) INTERMEDIATE LEVER SPRING

Requirement
With the clutch latched
Min 1 oz---Max 2 oz
to pull spring to installed length.

(A) LATCHLEVER SPRING

Requirement
With the clutch latched
Min 2 oz---Max 4 oz
to pull spring to installed length.

3.21 Code Reading Contact Mechanism (continued)

RESET BAIL

Requirement
Gap between any one latch and its intermediate lever should be
Min 0.010---Max 0.030 inch

To Check
Clutch unlatched and keyboard eccentric drive arm extension to extreme left.

To Adjust
Loosen four mounting plate screws and position assembly.

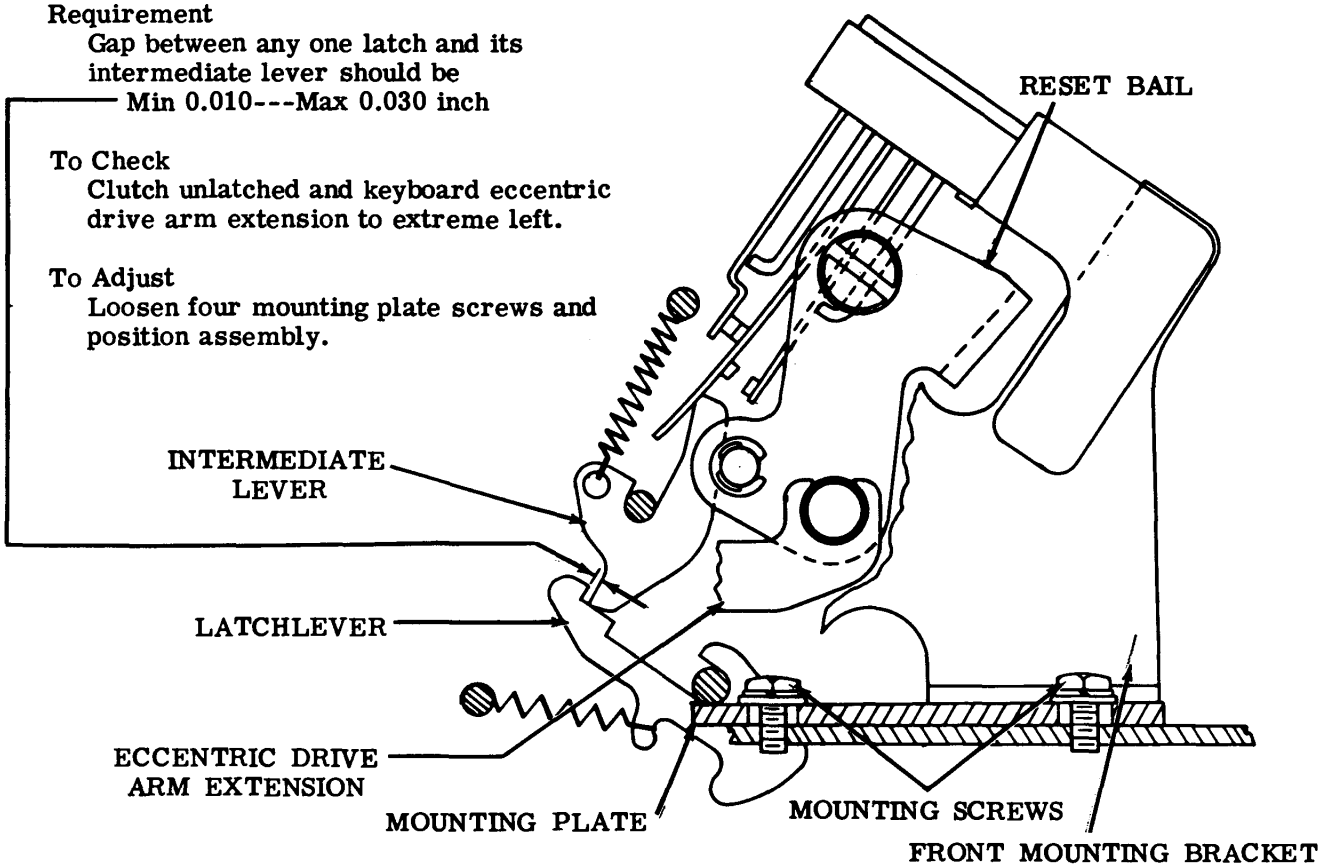

DRIVE ARM EXTENSION SPRING

Requirement
Clutch latched
Min 4 oz---Max 5 oz
to pull spring to installed length.

RESET BAIL SPRING

Requirement
Clutch latched
Min 1/2 oz---Max 1-1/2 oz
to pull spring to installed length.

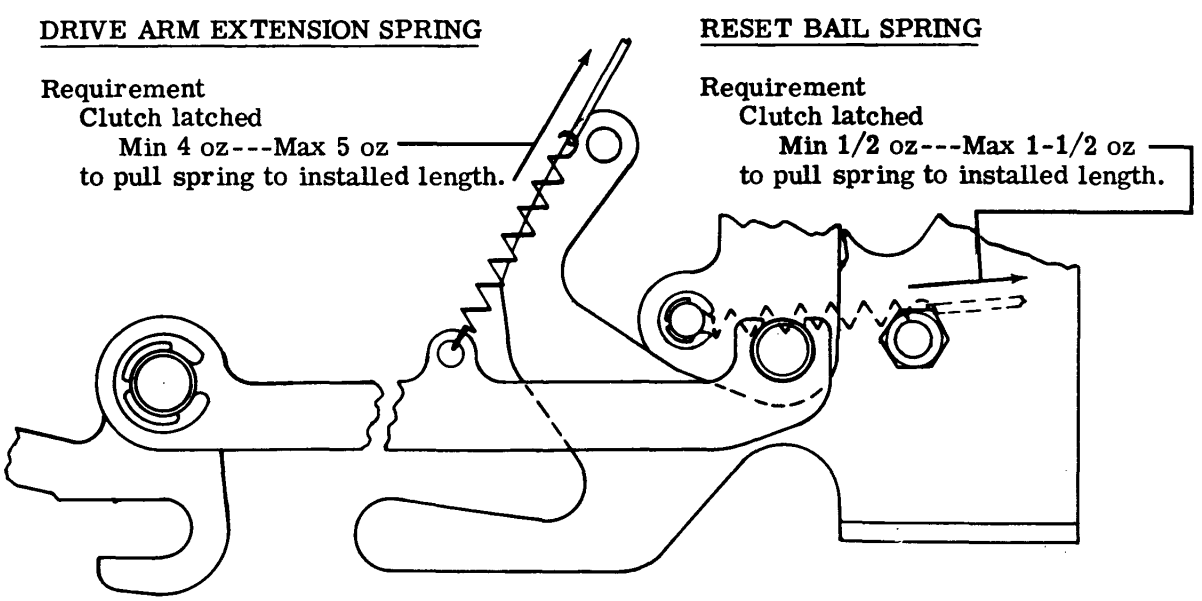

3.22 Code Reading Contact Mechanism (continued)

Note 1: The following tests should be performed after the contact assembly has been installed and all adjustments have been made.

Note 2: Minimum signal lengths apply to time between latest start and earliest end of all contact traces.

CODE READING CONTACT REFINEMENT (STROBING)

(1) Requirement
Zero the strobe unit (DXD) as follows:

(A) Connect strobe neon trace to code reading contact no. 1. Send rubout combination from keyboard. Note latest point at which trace begins.
(B) Repeat step (A) for all code reading contacts.
(C) Choose trace that starts latest and set START-ZERO mark of strobe scale to this point.
(D) Record earliest end of neon traces for future adjustment references.

(2) Requirement
Connect neon trace lamp to marking contact (contact that is normally open when keyboard is idle) of code reading contact assembly.

(A) Send rubout combination from keyboard.
(B) Combined code reading contact traces should have minimum signal length of 500 divisions (length between latest start and earliest end) and all bounce should end within 20 divisions of latest start of a contact trace. See Par. 3.23 for figure of strobe trace.
(C) Repeat (A) and (B) for each code reading contact.

To Adjust
Refine Par. 3.18(A).
Refine Par. 3.18(B) and (C) if there is excessive bounce.

3.23 Auxiliary Contact Mechanism (continued)

AUXILIARY CONTACT REFINEMENT (STROBING)

Requirement (See Notes 1 and 2 in Par. 3.22)
Zero the strobe unit (DXD) as explained in (1) Requirement of Par. 3.22.
Connect strobe neon trace to auxiliary contacts.
(A) Send rubout combination from keyboard.
(B) End of neon trace should occur at a minimum of 22 divisions before earliest end of code read contact traces (including any bounce). Start of trace should begin at a minimum of 143 divisions after the strobe START-ZERO mark. The pulse must be at least 250 divisions long.

To Adjust
Refine adjustment in Par. 3.17.

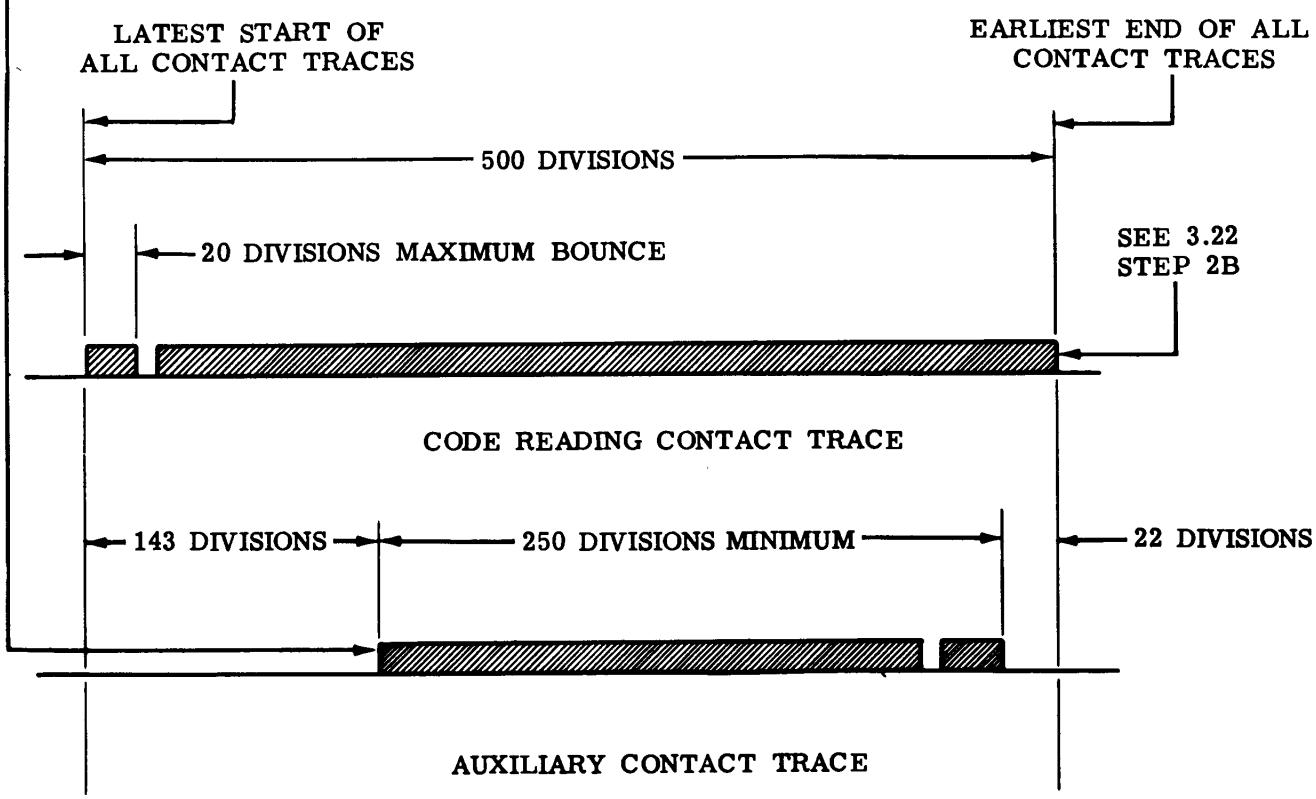

3.24 Strobing Requirements

SIGNAL GENERATOR CONTACTS

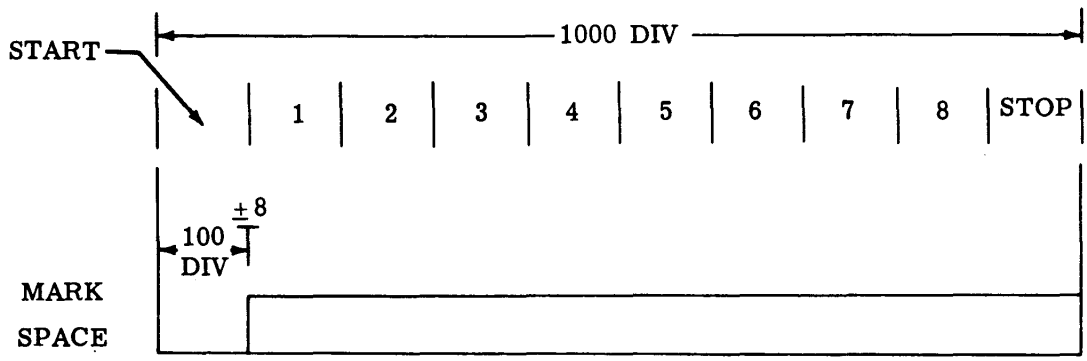

CODE READING AND TIMING CONTACTS

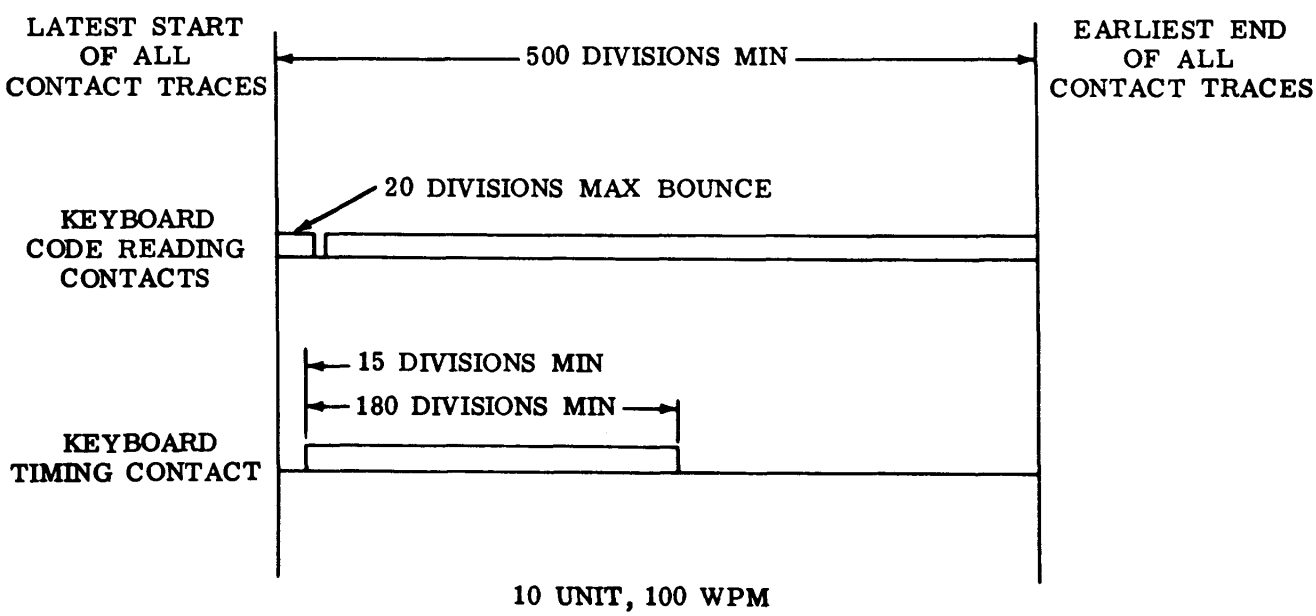

Note 1: For units equipped with signal regenerators, remove regenerator circuit card before applying test set probes to signal contacts.

Note 2: Applying operating voltage of signal distortion test set directly to gold-plated signal contacts may make them unsuitable for low-voltage applications. See Par. 1.07 for servicing instructions.

35 TAPE READER*BASES (FOR ASR SETS)

ADJUSTMENTS AND LUBRICATION

CONTENTS PAGE

1. GENERAL

1.01 This section is reissued to include information pertinent to new models, and to rearrange text. Lubrication procedures, formerly covered in section 574-223-701 have been included in this section.

1.02 The primary concern of this section is the description, adjustment and lubrication of the bases which mount 35 tape readers and answer-back or distributor units in ASR sets. For information regarding principles of operation and description, refer to other related 574-223-series sections.

2. ADJUSTMENTS

2.01 General. Gear arrangements vary from base to base depending upon the type of drive motor and the number and types of equipment mounted on the base. The gear adjustments following treat the bases in four major groups; single reader (low speed motor), double reader (low speed motor), single reader (high speed motor), and double reader (high speed motor).

* "Tape reader" is a general term applying to units often referred to as transmitters or transmitter distributors.

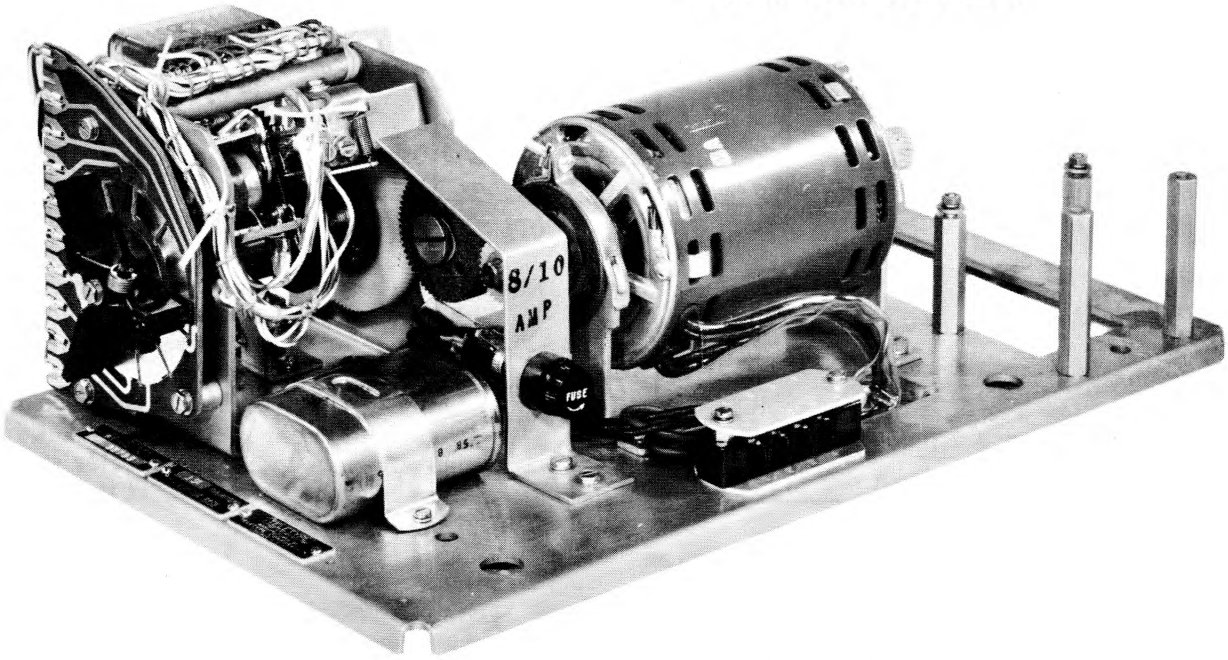

Figure 1 - 35 Tape Reader Base (Typical)

2.02 Single Reader Bases (Low Speed Motor)

Note: The procedure following is for a complete adjustment. Removal of a single component (motor, reader, or answer-back) will not normally require a complete re-adjustment. Perform adjustment in order given ((A), (B), (C), etc). Loosen reader, motor, and answer-back mounting screws before beginning a complete adjustment.

(A) TAPE READER

Requirement
Tape reader should be positioned midway between left and right adjustment extremes.

To Adjust
Position reader to meet requirement.
Tighten reader mounting screws.

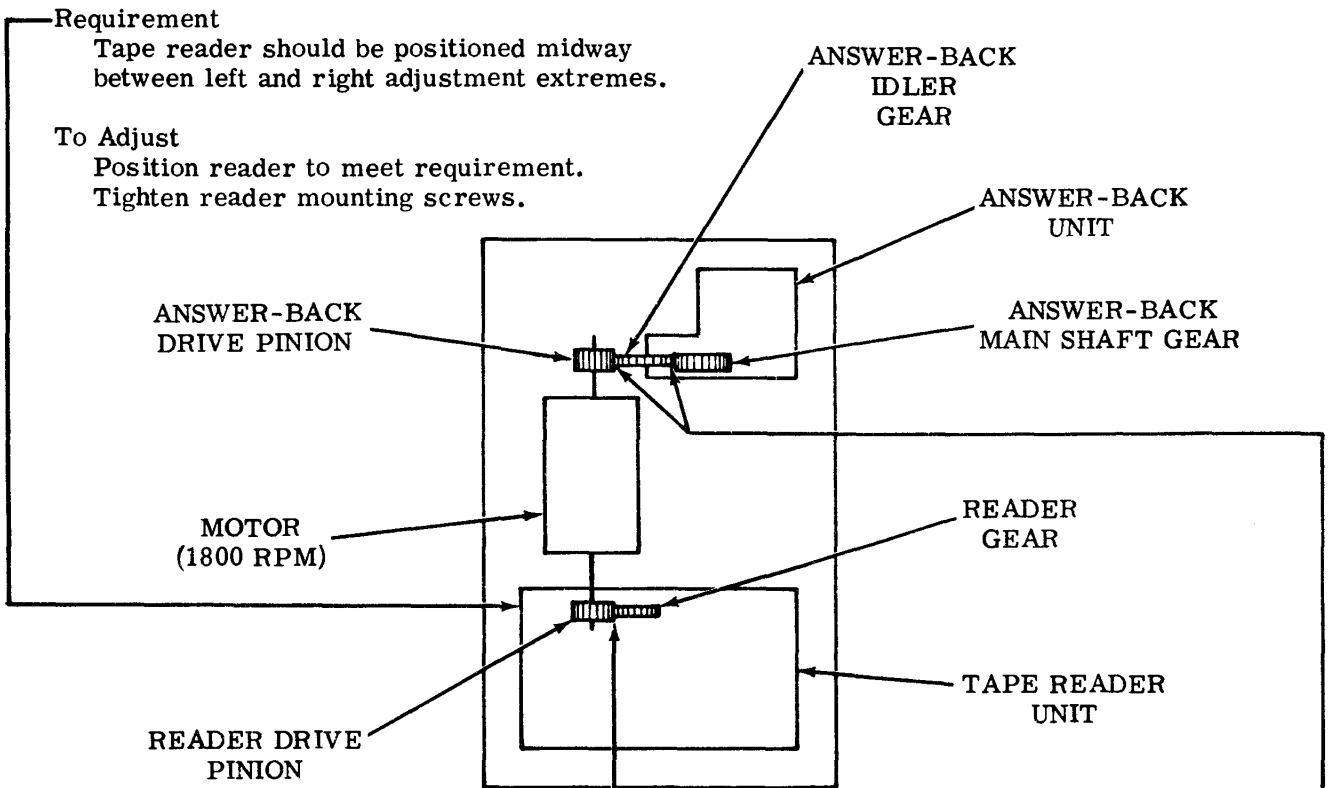

(B) READER DRIVE PINION

Requirement
There should be a
Min 0.004 inch---Max 0.008 inch backlash between the reader drive pinion and reader gear at the point of minimum clearance.

To Adjust
Position motor to meet requirement.
Tighten motor mounting screws.

(C) ANSWER-BACK IDLER GEAR

Requirement
With all play in answer-back mounting holes taken up in the direction toward the motor. There should be
Min 0.004 inch---Max 0.008 inch backlash between idler gear and answer-back mainshaft gear and between idler gear and answer-back drive pinion, at the point of minimum clearance.

To Adjust
Loosen answer-back idler gear bracket.
Take up adjustment play toward motor and tighten answer-back mounting screws.
Position idler gear to meet requirement and tighten bracket locking screws.

2.03 Double Reader Bases (Low Speed Motor)

Note: The procedure following is for a complete adjustment. Removal of a single component (motor, reader, or answer-back) will not normally require a complete readjustment. Perform adjustment in order given ((A), (B), (C), etc). Loosen reader, idler gear shaft, motor, and answer-back mounting screws before beginning complete adjustment.

(A) READER IDLER GEARS

Requirement
Reader idler gear shaft should be positioned midway between left and right extremes.

To Adjust
Position the shaft brackets at their mid-adjustment position and tighten bracket mounting screws.

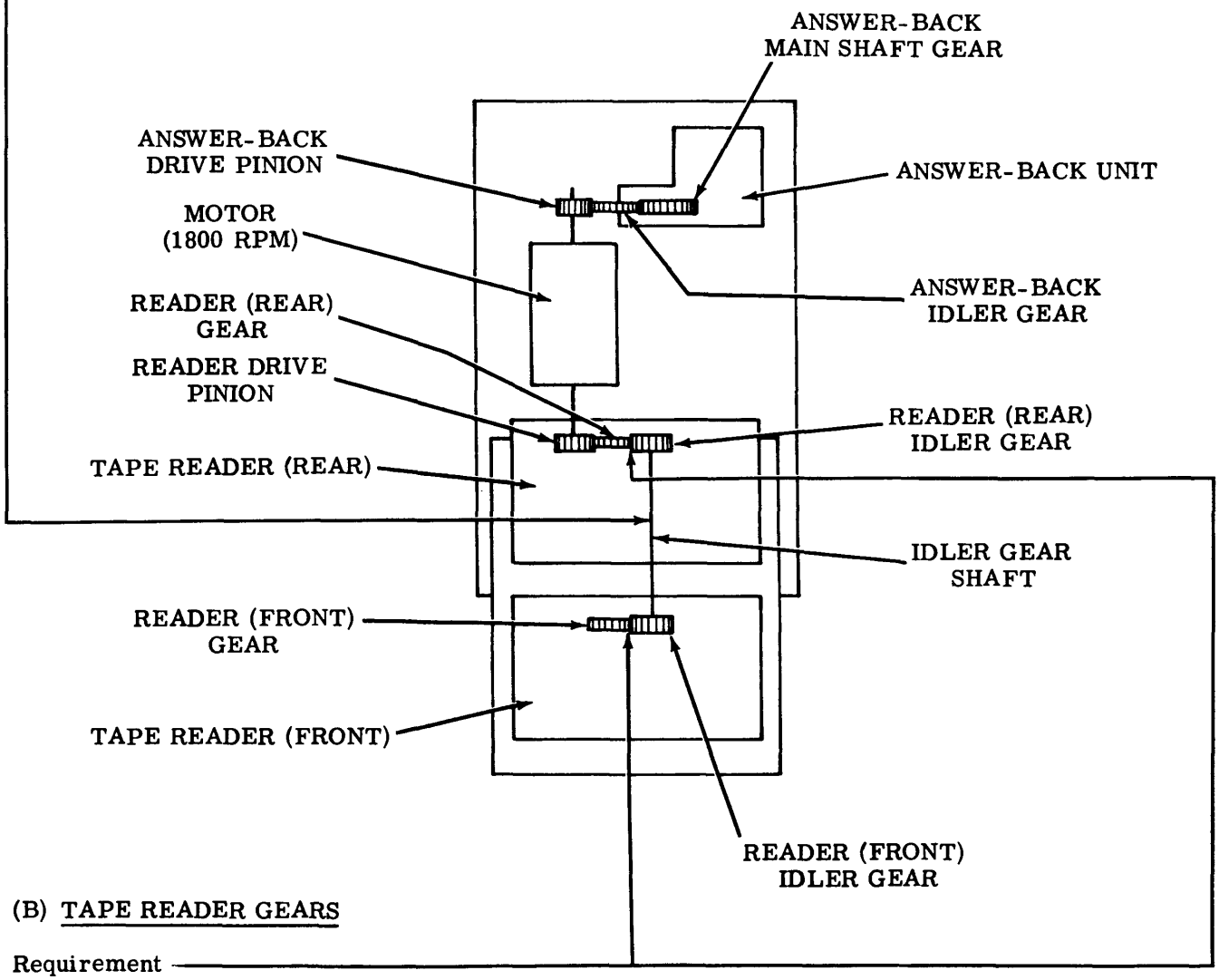

(B) TAPE READER GEARS

Requirement
There should be a
Min 0.004 inch---Max 0.008 inch backlash between the reader idler gear and its associated reader gear at the point of minimum clearance.

To Adjust
Position each reader to meet requirement and tighten reader mounting screws.

2.03 Double Reader Bases (Low Speed Motor) (Continued)

(C) READER DRIVE PINION

Requirement

There should be
Min 0.004 inch---Max 0.008 inch backlash
between the rear reader gear and the reader
drive pinion at the point of minimum backlash.

To Adjust

Position the motor to meet requirements.
Tighten motor mounting screws.

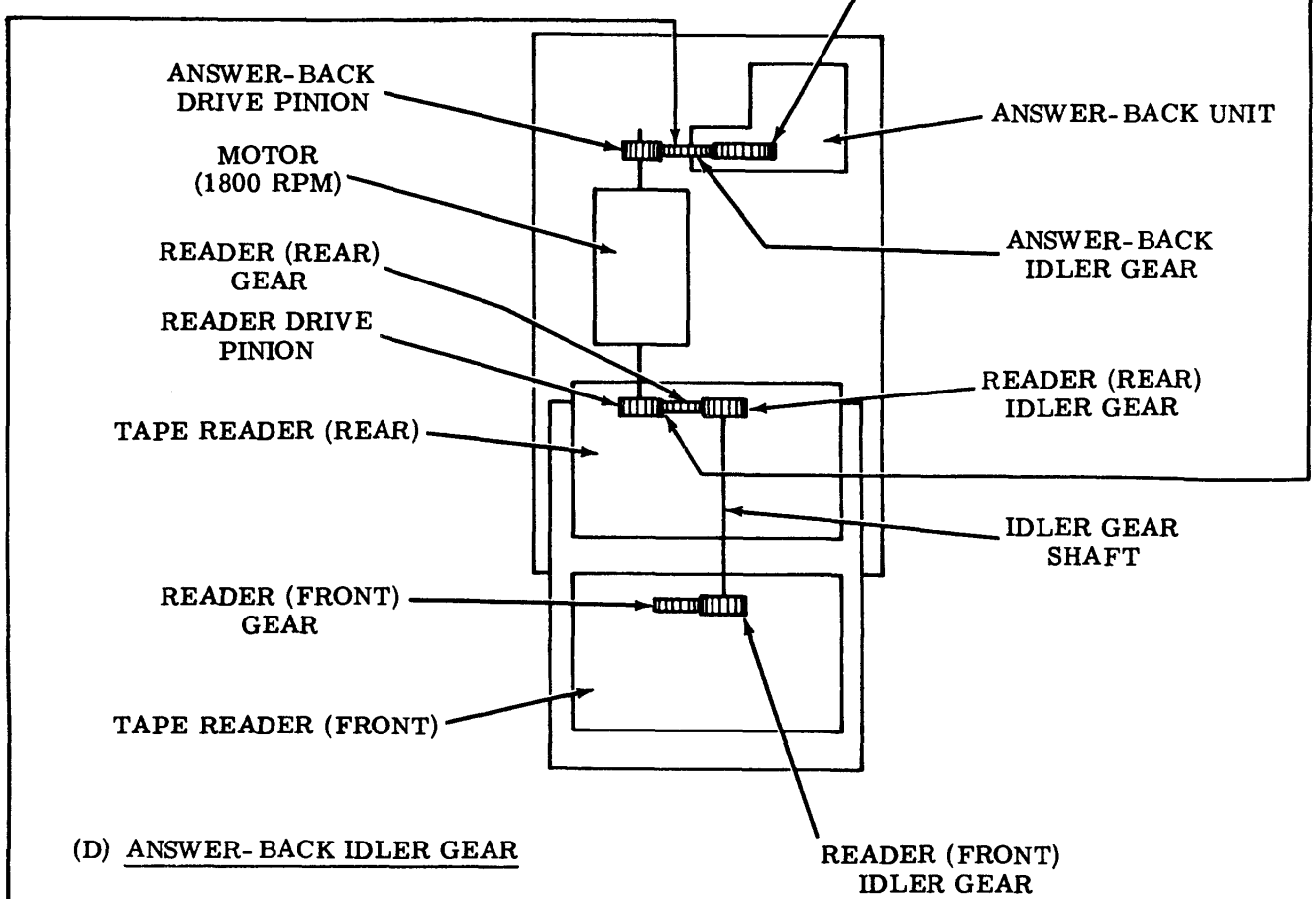

(D) ANSWER-BACK IDLER GEAR

Requirement

With all play in answer-back mounting holes taken up
in the direction toward the motor, there should be
Min 0.004 inch---Max 0.008 inch backlash
between idler gear and answer-back mainshaft
gear and between idler gear and answer-back
drive pinion measured at point of minimum
clearance.

To Adjust

Loosen answer-back idler gear bracket locking
screw. Take up play and tighten mounting screws.
Position idler gear to meet requirements and
tighten locking screw.

2.04 Single Reader Bases (High Speed Motor)

Note: The procedure following is for a complete adjustment. Removal of a single component (motor, reader, or answer-back, or distributor) will not normally require a complete readjustment. Perform adjustments in the order given ((A), (B), (C), etc). Loosen reader, connector bracket (if so equipped), drive shaft bracket, motor, and answer-back or distributor unit mounting screws before beginning a complete adjustment.

(A) DRIVE GEAR SHAFT

Requirement
The drive gear shaft should be positioned midway between left and right mounting extremes.

To Adjust
Position the shaft brackets at their mid-adjustment position and tighten bracket mounting screws.

(B) TAPE READER GEAR

Requirement
There should be
Min 0.004 inch---Max 0.008 inch backlash between the reader gear and reader drive gear at the point of minimum clearance.

To Adjust
Position reader to meet requirement and tighten reader mounting screws.

(C) CONNECTOR BRACKET ADJUSTMENT

(For those bases on which the reader mating connector is rigidly fixed)

Requirement
The connector should mate with the connector on the bottom of the reader and be fully engaged.

To Adjust
Position connector bracket to meet requirements and tighten mounting screws.

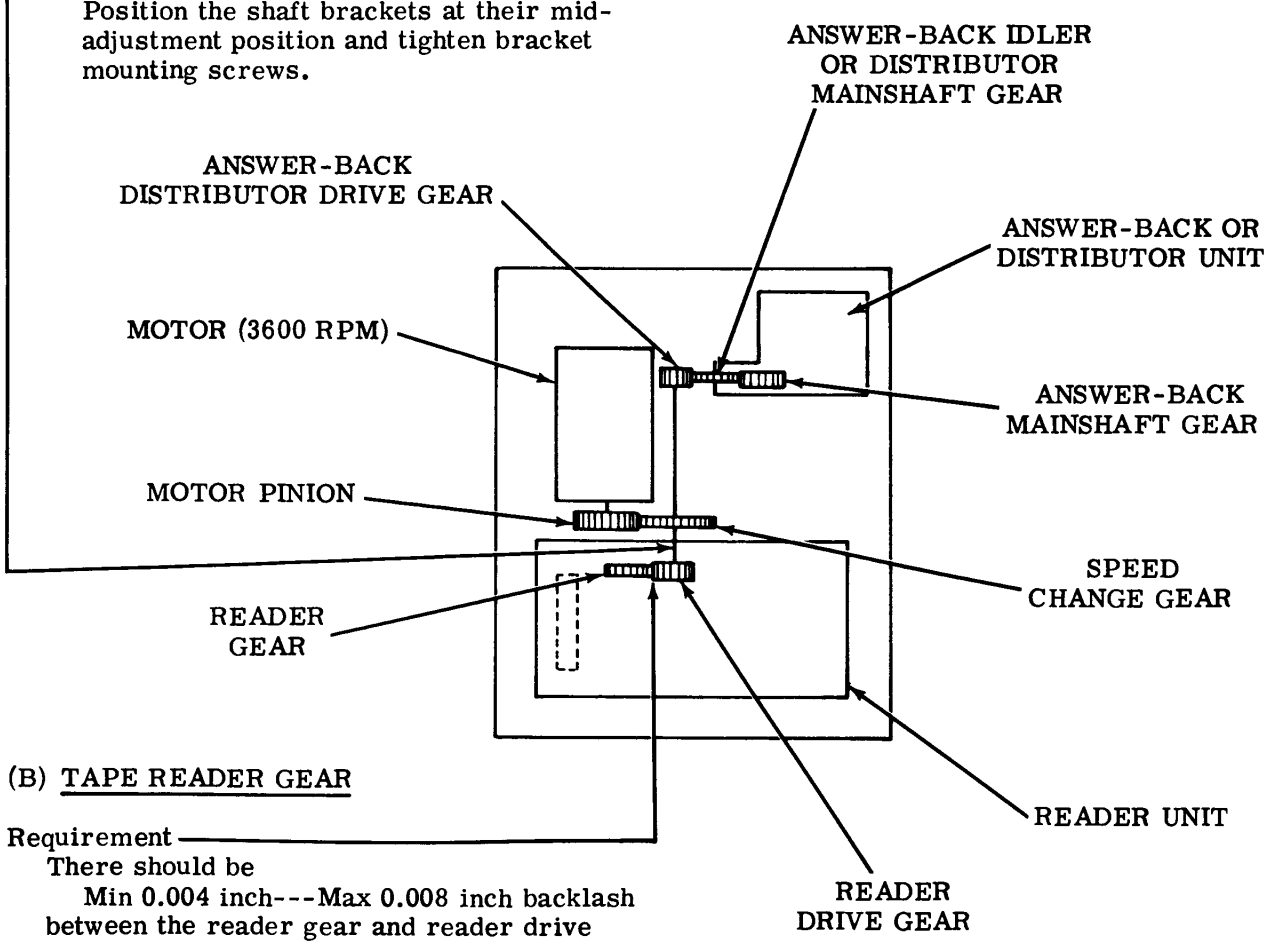

2.04 Single Reader Bases (High Speed Motor) (Continued)

(D) MOTOR PINION

Requirement
There should be
Min 0.004 inch---Max 0.008 inch backlash between the reader gear and motor pinion at the point of minimum clearance.

To Adjust
Position motor to meet requirements and tighten motor mounting screws.

(E) DISTRIBUTOR MAINSHAFT GEAR

(Applies only to bases which mount distributor units)

Requirement
There should be
Min 0.004 inch---Max 0.008 inch backlash between answer-back/distributor drive gear and distributor mainshaft gear at the point of minimum clearance.

To Adjust
Position distributor unit to meet requirements and tighten mounting screws.

(F) ANSWER-BACK IDLER GEAR

(Applies only to bases which mount answer-back units)

Requirement
With all play in answer-back mounting holes taken up in the direction toward the motor, there should be
Min 0.004 inch---Max 0.008 inch backlash between idler gear and answer-back/distributor drive gear measured at the point of minimum clearance.

To Adjust
Loosen answer-back idler gear bracket locking screw. Take up play and tighten unit mounting screws. Position idler gear to meet requirement and tighten locking screws.

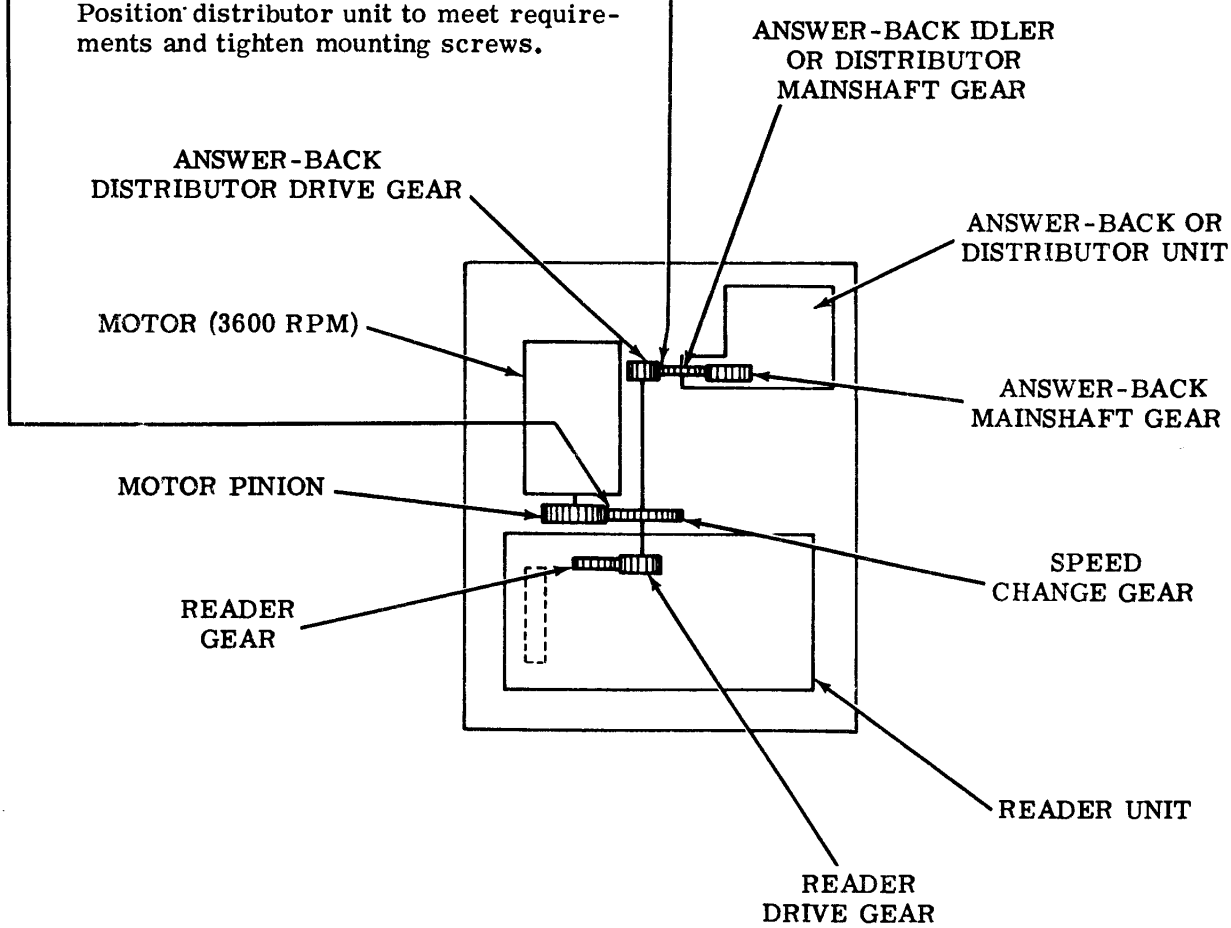

2.05 Double Reader Bases (High Speed Motor)

Adjustment of gears on double reader bases (below) is the same as for single unit bases (2.04) except that one additional reader must be positioned.

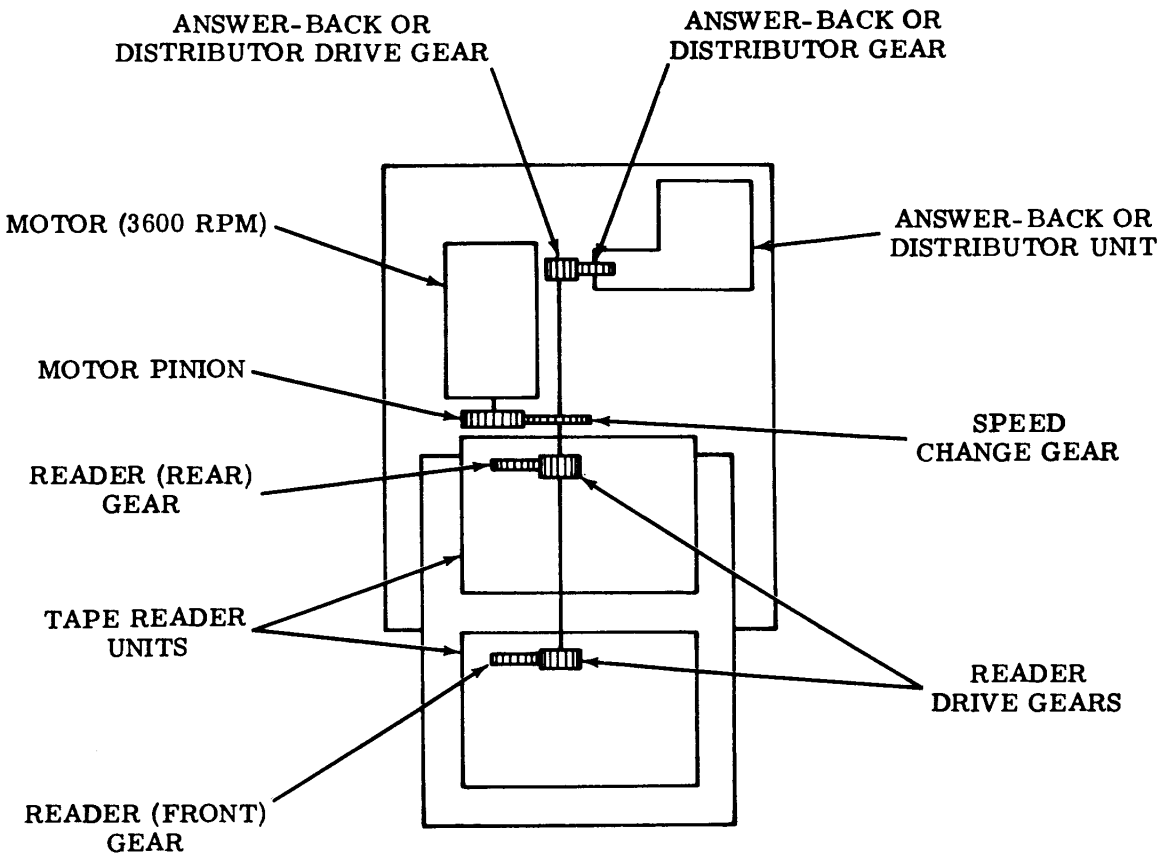

3. LUBRICATION

3.01 The tape reader base should be lubricated just prior to placing the unit in service. Thereafter, lubricate every 1500 hours of operation or every six months, whichever occurs first.

3.02 Apply a thin film of KS7471 grease to the surface of all gears EXCEPT THE ANSWER-BACK DRIVE GEAR (OR PINION), THE ANSWER-BACK IDLER GEAR, AND THE ANSWER-BACK MAIN SHAFT GEAR (see adjustment illustrations). On those bases which mount a distributor unit rather than an answer-back, both the distributor drive gear and main-shaft gear should be lubricated along with all other gears.

3.03 Apply a few drops of KS7470 oil to the oiler holes at each end of the motor.

35 NON-TYPING REPERFORATOR

ADJUSTMENTS

CONTENTS PAGE

1. GENERAL

1.01 This section is reissued to:

(a) Include recent engineering changes.

(b) Include armature with two anti-freeze buttons.

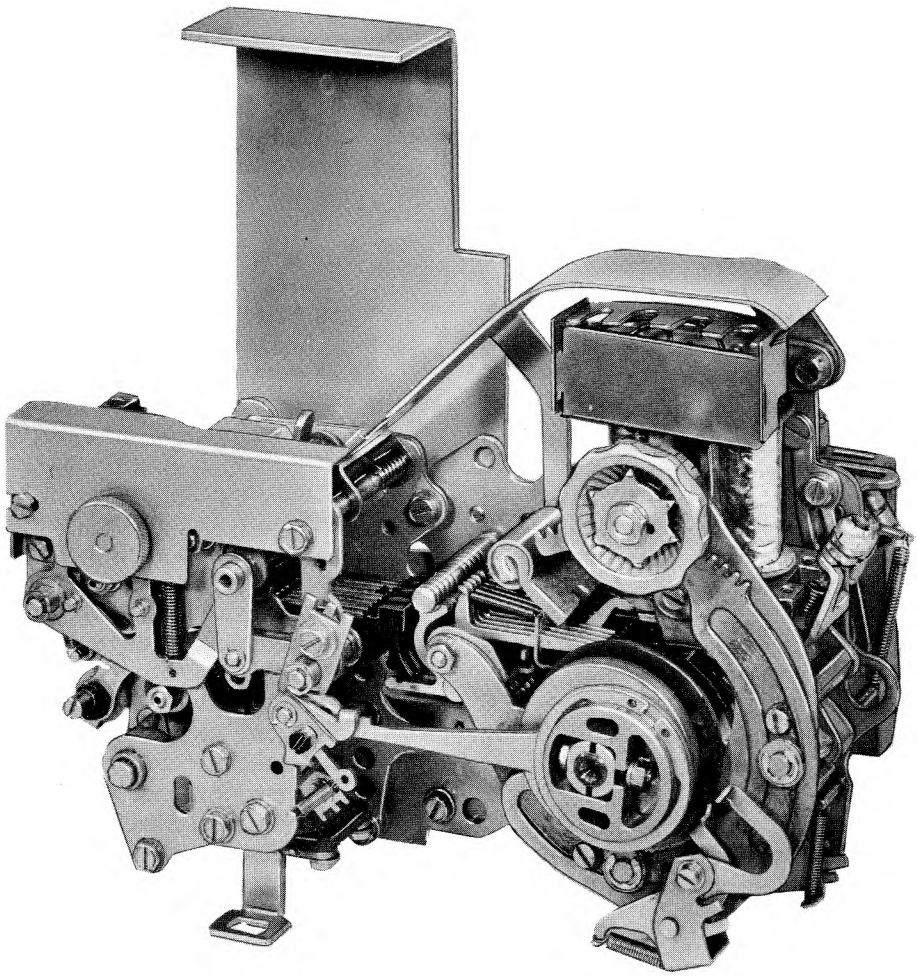

Figure 1 - 35 Non-Typing Reperforator (Right Front View)

(c) Include lateral and front to rear feed wheel adjustment (early design).

1.02 This section contains specific requirements and adjustments for the 35 Non-Typing Reperforator (Fig. 1). The basic equipment includes selector mechanism, fully perforating punch mechanism and power driven backspace mechanism. The unit is designed for adaptation either by a single shaft or by a main shaft and jack shaft to power supplied from a base mounted motor. Where there are differences in the adjustment procedures for single shaft and double shaft units, these are noted in the adjustment text and illustrations. Motors and bases are covered in the applicable sections.

1.03 Reference to left or right, front or rear and up or down refer to the apparatus in its normal operating position, as viewed from the front with the selector mechanism to the right and the punch mechanism to the left. It is assumed that the elements depicted in illustrations in this section are being viewed from a position in front of the equipment, unless the illustrations are specifically labeled otherwise. In the illustrations, pivot points are shown by circles or ellipses that are solid black to indicate fixed points and cross-hatched to indicate floating points.

1.04 Tools required to make the adjustments and test the spring tensions are listed in the appropriate section. Spring tensions given in this section are indications, not exact values, and should be checked with the correct scale applied in the positions shown in the drawings.

1.05 The unit is in its unoperated, or stop, condition when it is not under power. It is in its idling condition when it is under power and clutches are disengaged (steady marking condition of signal line).

CAUTION: APPARATUS SHOULD NOT BE SEPARATED FROM ITS PROTECTIVE HOUSING UNLESS POWER IS DISCONNECTED. WHERE OPERATION OF THE EQUIPMENT IS REQUIRED AFTER IT HAS BEEN SEPARATED FROM ITS PROTECTIVE HOUSING, APPROPRIATE PRECAUTIONARY MEASURES SHOULD BE TAKEN TO PREVENT ACCIDENTS.

1.06 When a requirement calls for a clutch to be DISENGAGED, the clutch shoe lever must be fully latched between its trip lever (or stop arm) and latch lever. The main shaft will then turn freely without the clutch shoes dragging. When the clutch is ENGAGED, the shoe lever and cam disk stop lug are moved apart, and the clutch shoes are wedged against the drum so that the clutch turns with the shaft.

Note: If the shaft is turned by hand, the clutch will not fully disengage upon reaching its stop position. Where a procedure calls for disengagement, rotate the clutch to its stop position, apply a screwdriver to the cam disk stop lug and turn the disk in the normal direction of shaft rotation until the latch lever seats in its notch in the disk.

1.07 To manually operate the 35 Non-Typing Reperforator, proceed as follows:

(a) Attach the armature clip to the selector magnet armature by carefully putting the flat formed end of the armature clip over the top of the armature between the pole pieces and then hooking the projection under the edge of the armature. The spring tension of the armature clip will hold the selector armature in the marking (attracted) position.

(b) While holding the selector magnet attracted by means of the armature clip, manually rotate the main shaft in a counterclockwise direction until all the clutches are brought to their disengaged position.

(c) Fully disengage the clutches in accordance with 1.06, Note.

(d) Release the selector magnet armature momentarily to permit the selector clutch to engage.

(e) Rotate the main shaft slowly until all the push levers have fallen to the left of their selecting levers.

(f) Strip the push levers from their selector levers if they are spacing in the code combination of the character or function that is being selected. Allow the push levers to

move to the right. The push levers and selector levers move in succession, starting with the inner lever No. 1, to the outer lever No. 8.

(g) Continue to rotate the main shaft until all operations initiated by the selector action clear through the unit.

1.08 Parts dismantled to facilitate checking or readjustment should be reassembled after the operation is completed. If a part mounted on shims is to be dismantled, the number of shims used at each mounting screw should be noted so that the same shim pile-ups can be replaced when the part is remounted. When parts removed are replaced, related adjustments which may have been affected should be checked.

1.09 Parts that are worn to the extent that they can no longer be made to meet the specified requirements by authorized adjustments or which are worn to the extent that it seems probable that early further wear might cause a loss of adjustment should be replaced by new parts. Springs which do not meet the requirements and for which there are no adjusting procedures should be discarded and replaced by new springs.

1.10 All contact points should meet squarely. Smaller points should fall wholly within the circumference of larger mating points. Points that are the same size should not be out of alignment more than 25 per cent of the point diameter. Avoid sharp kinks or bends in the contact springs.

Note: Keep all electrical contacts free of oil and grease.

2. ADJUSTMENTS

2.01 The following figures show the adjusting tolerances, position of parts and spring tensions. The illustrations are arranged so that the adjustments are in the sequence that would be followed if a complete readjustment of the apparatus were being made. In some cases, where an illustration shows interrelated parts, the sequence that should be followed in checking the requirements and making the adjustments is indicated by the letters (A), (B), (C), etc.

2.02 Selector and Function Mechanisms

CLUTCH SHOE LEVER (BOTH CLUTCHES)

REQUIREMENT

GAP BETWEEN CLUTCH SHOE LEVER AND ITS STOP LUG SHOULD BE 0.055 INCH TO 0.085 INCH GREATER WHEN CLUTCH IS ENGAGED THAN WHEN CLUTCH IS DISENGAGED.

TO CHECK

DISENGAGE CLUTCH AND MEASURE GAP. ALIGN HEAD OF DRUM MOUNTING SCREW WITH STOP LUG. ENGAGE CLUTCH. MANUALLY PRESS SHOE LEVER AGAINST STOP LUG AND ALLOW TO SNAP APART. MEASURE GAP WITH CLUTCH ENGAGED.

TO ADJUST

ENGAGE WRENCH OR SCREWDRIVER WITH LUG ON ADJUSTING DISK. ROTATE DISK WITH CLAMP SCREWS LOOSENED.

NOTE

AFTER MAKING ADJUSTMENT, DISENGAGE CLUTCH. REMOVE DRUM MOUNTING SCREW. ROTATE DRUM IN NORMAL DIRECTION AND CHECK TO SEE IF IT DRAGS ON SHOE. IF IT DOES, REFINE ADJUSTMENT.

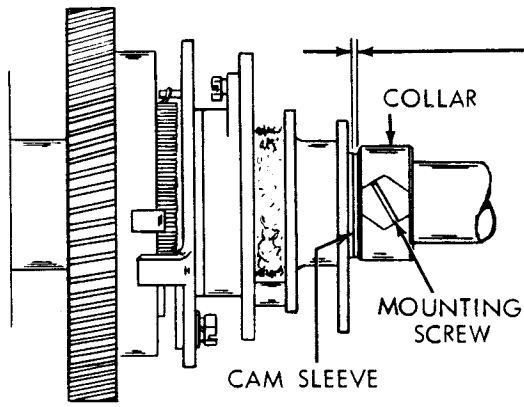

FUNCTION CLUTCH DRUM END PLAY (FOR UNITS EQUIPPED WITH TWO SHAFTS)

REQUIREMENT

FUNCTION CLUTCH DISENGAGED. SOME END PLAY BETWEEN CAM SLEEVE AND COLLAR MAX. 0.015 INCH WHEN PLAY IS TAKEN UP TO MAKE CLEARANCE A MAXIMUM.

TO ADJUST

POSITION COLLAR WITH MOUNTING SCREW LOOSENED.

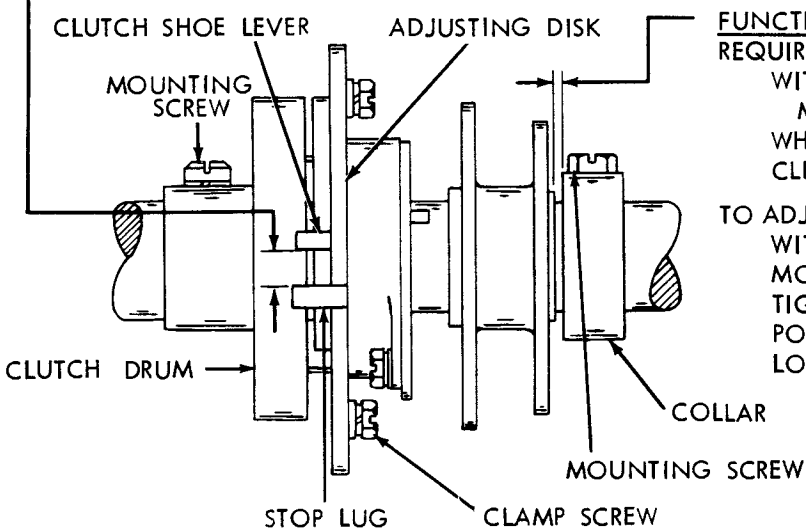

FUNCTION CLUTCH DRUM END PLAY

REQUIREMENT

WITH FUNCTION CLUTCH DISENGAGED MIN. SOME----MAX. 0.015 INCH WHEN PLAY IS TAKEN UP TO MAKE CLEARANCE MAX.

TO ADJUST

WITH ITS MOUNTING SCREW LOOSENED, MOVE DRUM TO EXTREME FRONT POSITION. TIGHTEN DRUM MOUNTING SCREW. POSITION COLLAR WITH MOUNTING SCREW LOOSENED.

2.03 Selector and Function Mechanisms (Cont.)

CLUTCH SHOE LEVER SPRING TENSION

REQUIREMENT

CLUTCH ENGAGED. CAM DISK HELD TO PREVENT TURNING. SPRING SCALE PULLED AT TANGENT TO CLUTCH.

MIN. 16 OZS.
MAX. 22 OZS.

TO MOVE SHOE LEVER IN CONTACT WITH STOP LUG.

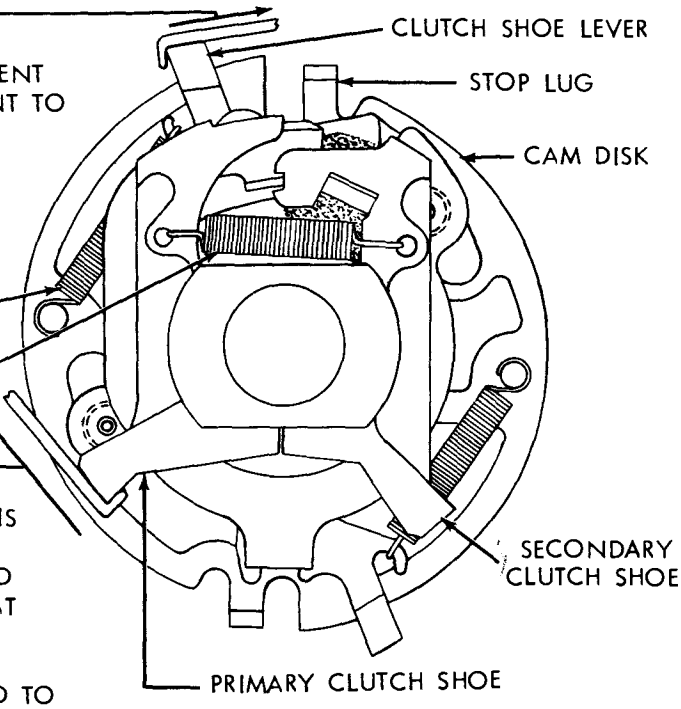

CLUTCH SHOE SPRING TENSION

NOTE

IN ORDER TO CHECK THIS SPRING TENSION, IT IS NECESSARY TO REMOVE CLUTCH FROM MAIN SHAFT. THEREFORE, IT SHOULD NOT BE CHECKED UNLESS THERE IS GOOD REASON TO BELIEVE THAT IT DOES NOT MEET ITS REQUIREMENT.

REQUIREMENT

CLUTCH DRUM REMOVED. SPRING SCALE APPLIED TO PRIMARY SHOE AT TANGENT TO FRICTION SURFACE.

MIN. 3 OZS.
MAX. 5 OZS.

TO START SHOE MOVING AWAY FROM SECONDARY SHOE AT POINT OF CONTACT.

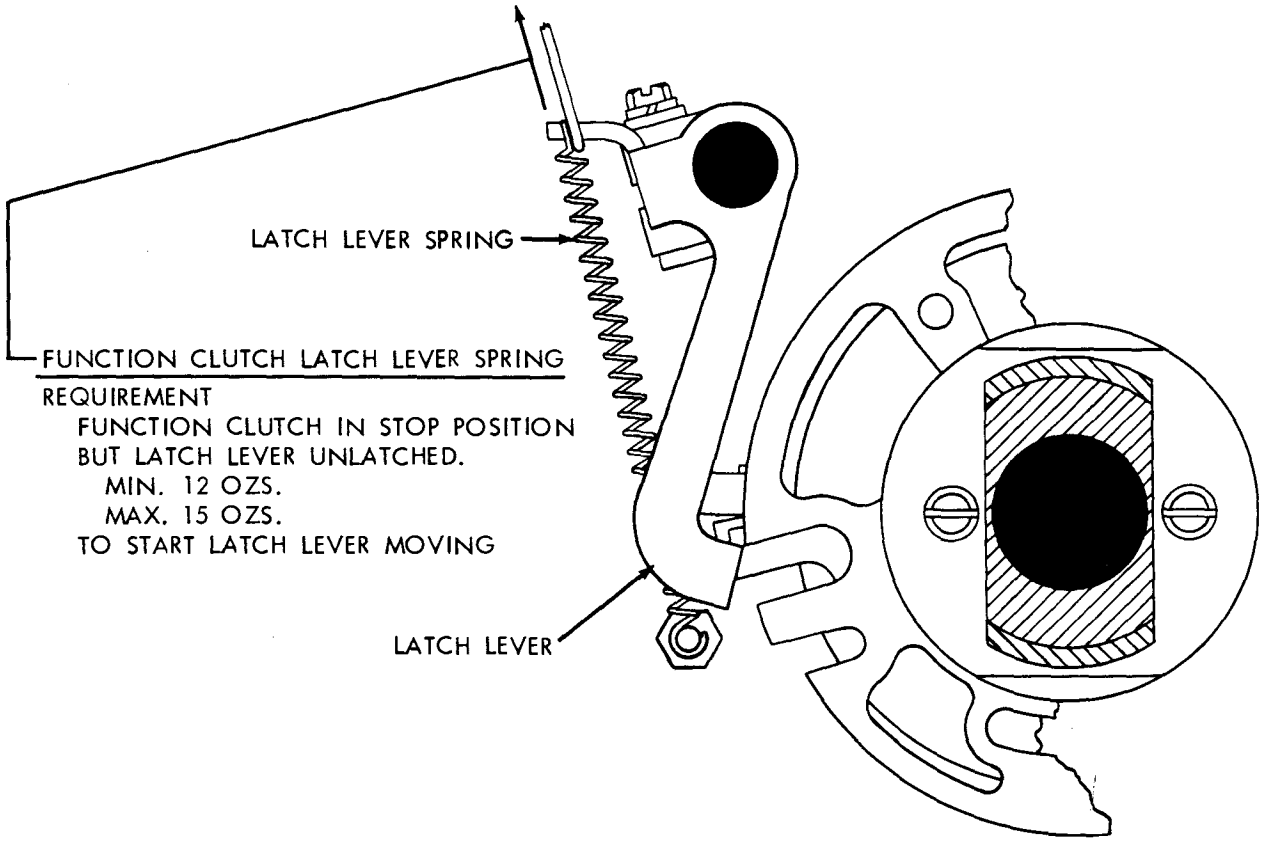

FUNCTION CLUTCH LATCH LEVER SPRING

REQUIREMENT

FUNCTION CLUTCH IN STOP POSITION BUT LATCH LEVER UNLATCHED.

MIN. 12 OZS.
MAX. 15 OZS.

TO START LATCH LEVER MOVING

2.04 Selector Mechanism

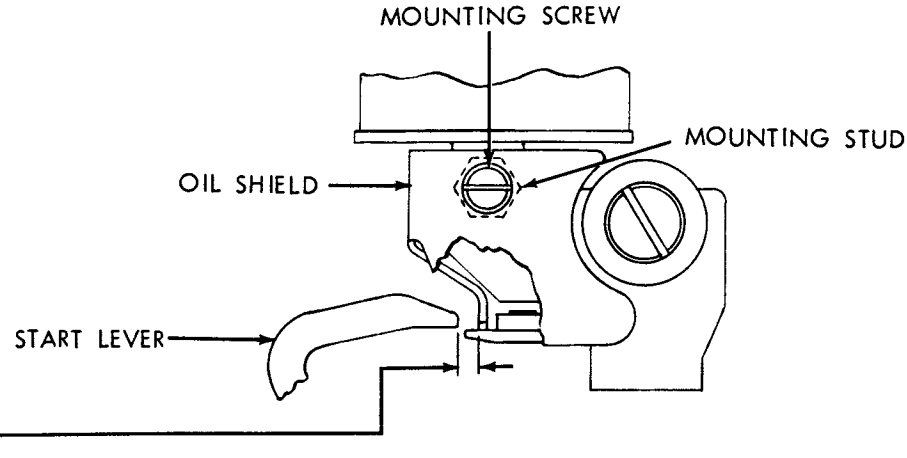

OIL SHIELD (IF PRESENT)

REQUIREMENT

(1) MAGNET DE-ENERGIZED. STOP ARM BAIL ON LOW PART OF ITS CAM. CLEARANCE BETWEEN START LEVER AND OIL SHIELD.
MIN. 0.020 INCH
MAX. 0.030 INCH

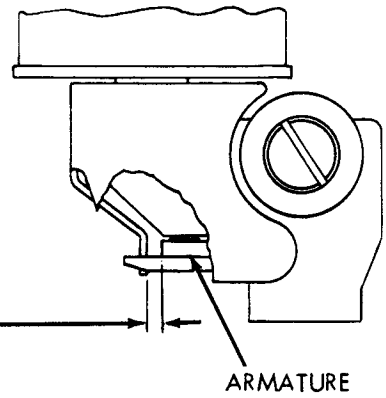

(2) MAGNET ENERGIZED. STOP ARM BAIL ON HIGH PART OF ITS CAM. CLEARANCE BETWEEN END OF ARMATURE AND OIL SHIELD.
MIN. 0.010 INCH

TO ADJUST

POSITION SHIELD WITH MOUNTING SCREW LOOSENED. MAKE SURE OIL SHIELD MOUNTING STUD IS SECURE BEFORE MAKING ADJUSTMENT.

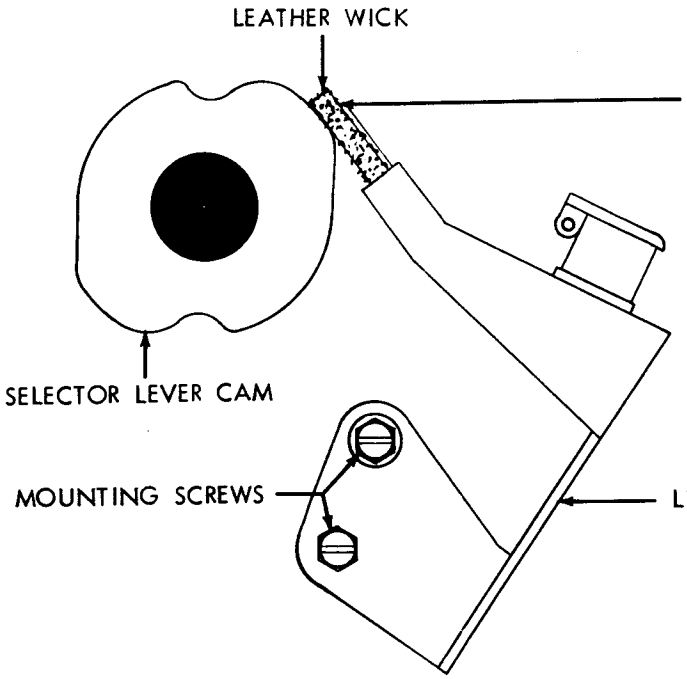

SELECTOR CAM LUBRICATOR

REQUIREMENT

HIGH PART OF SELECTOR LEVER CAMS SHOULD CONTACT LEATHER WICK BUT SHOULD NOT DEFLECT WICK MORE THAN 1/32 INCH GAUGED VISUALLY.

TO ADJUST

POSITION LUBRICATOR ASSEMBLY AROUND LOWER SCREW WITH MOUNTING SCREWS LOOSENED.

2.05 Selector Mechanism (Cont.)

NOTE

TO FACILITATE MAKING THE FOLLOWING ADJUSTMENTS, REMOVE THE RANGE FINDER ASSEMBLY AND SELECTOR MAGNET ASSEMBLY. TO INSURE BETTER OPERATION, PULL A PIECE OF BOND PAPER BETWEEN THE ARMATURE AND THE POLE PIECES TO REMOVE ANY OIL OR FOREIGN MATTER THAT MAY BE PRESENT. MAKE CERTAIN THAT NO LINT OR PIECES OF PAPER REMAIN BETWEEN THE POLE PIECES AND THE ARMATURE.

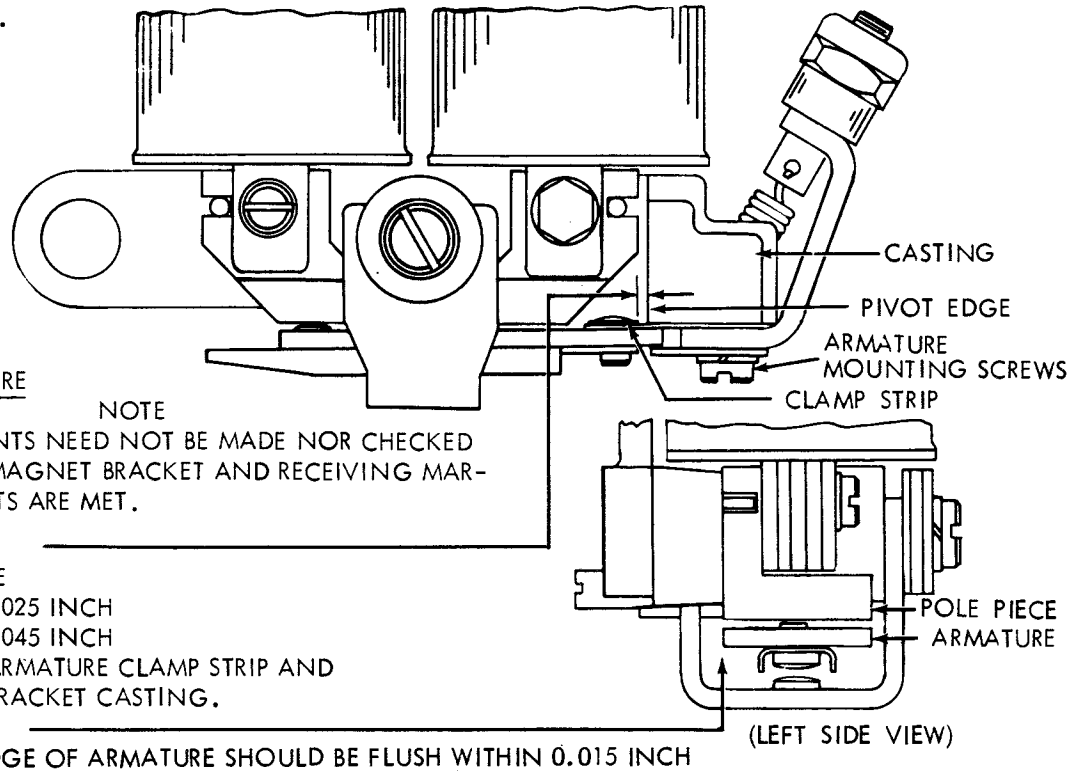

SELECTOR ARMATURE

NOTE

THESE REQUIREMENTS NEED NOT BE MADE NOR CHECKED IF THE SELECTOR MAGNET BRACKET AND RECEIVING MARGIN REQUIREMENTS ARE MET.

(1) REQUIREMENT
CLEARANCE
MIN. 0.025 INCH
MAX. 0.045 INCH
BETWEEN ARMATURE CLAMP STRIP AND MAGNET BRACKET CASTING.

(2) REQUIREMENT
OUTER EDGE OF ARMATURE SHOULD BE FLUSH WITHIN 0.015 INCH WITH OUTER EDGE OF POLE PIECES.

(3) REQUIREMENT
START LEVER SHALL DROP FREELY INTO ARMATURE EXTENSION SLOT.

TO ADJUST
POSITION ARMATURE SPRING ADJUSTING NUT TO HOLD ARMATURE FIRMLY AGAINST PIVOT EDGE OF CASTING. POSITION ARMATURE WITH MOUNTING SCREWS LOOSENED.

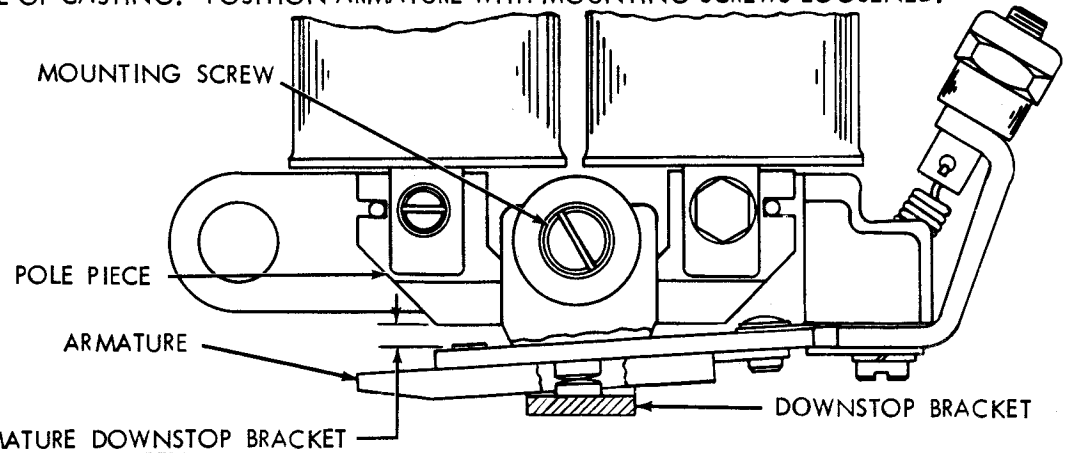

SELECTOR ARMATURE DOWNSTOP BRACKET

REQUIREMENT
REMOVE OIL SHIELD. WITH MAGNET DE-ENERGIZED, LOCK LEVERS ON HIGH PART OF THEIR CAM, AND ARMATURE RESTING AGAINST ITS DOWNSTOP, CLEARANCE BETWEEN END OF ARMATURE AND LEFT EDGE OF LEFT POLE PIECE
MIN. 0.025 INCH MAX. 0.030 INCH.

TO ADJUST
POSITION DOWNSTOP BRACKET WITH MOUNTING SCREW LOOSENED. REPLACE OIL SHIELD AND CHECK OIL SHIELD ADJUSTMENT.

2.06 Selector Mechanism (Cont.)

SELECTOR ARMATURE SPRING
(FOR UNITS EMPLOYING SELECTOR ARMATURE WITH SINGLE ANTI-FREEZE BUTTON ONLY).
REQUIREMENT (PRELIMINARY)
WITH LOCKING LEVERS AND START LEVER ON HIGH PART OF THEIR CAMS, SCALE APPLIED AS NEARLY VERTICAL AS POSSIBLE UNDER END OF ARMATURE EXTENSION. IT SHALL REQUIRE THE FOLLOWING TENSIONS TO MOVE ARMATURE TO MARKING POSITION:

0.060 AMPERE - MIN. 2-1/2 OZS. --- MAX. 3 OZS.
0.030 AMPERE - MIN. 1-1/2 OZS. --- MAX. 2 OZS.
0.500 AMPERE - MIN. 4-1/2 OZS. --- MAX. 5-1/2 OZS.

NOTE

THIS SPRING CAN BE ADJUSTED FOR MAXIMUM SELECTOR PERFORMANCE ONLY WHEN PRINTER IS CONNECTED TO THE SPECIFIC CIRCUIT OVER WHICH IT IS TO OPERATE UNDER SERVICE CONDITIONS. SINCE THERE ARE SEVERAL OPERATING SPEEDS AND SINCE CIRCUITS VARY WIDELY, IT IS IMPOSSIBLE TO ADJUST SPRING FOR MAXIMUM PERFORMANCE AT THE FACTORY. THE FOREGOING SPRING TENSION REQUIREMENT IS GIVEN TO PERMIT OPERATION PRIOR TO MEASUREMENT OF RECEIVING MARGINS. READJUSTMENT MADE TO OBTAIN SATISFACTORY RECEIVING MARGIN SHOULD NOT BE DISTURBED IN ORDER TO MEET REQUIREMENTS OF THIS ADJUSTMENT.

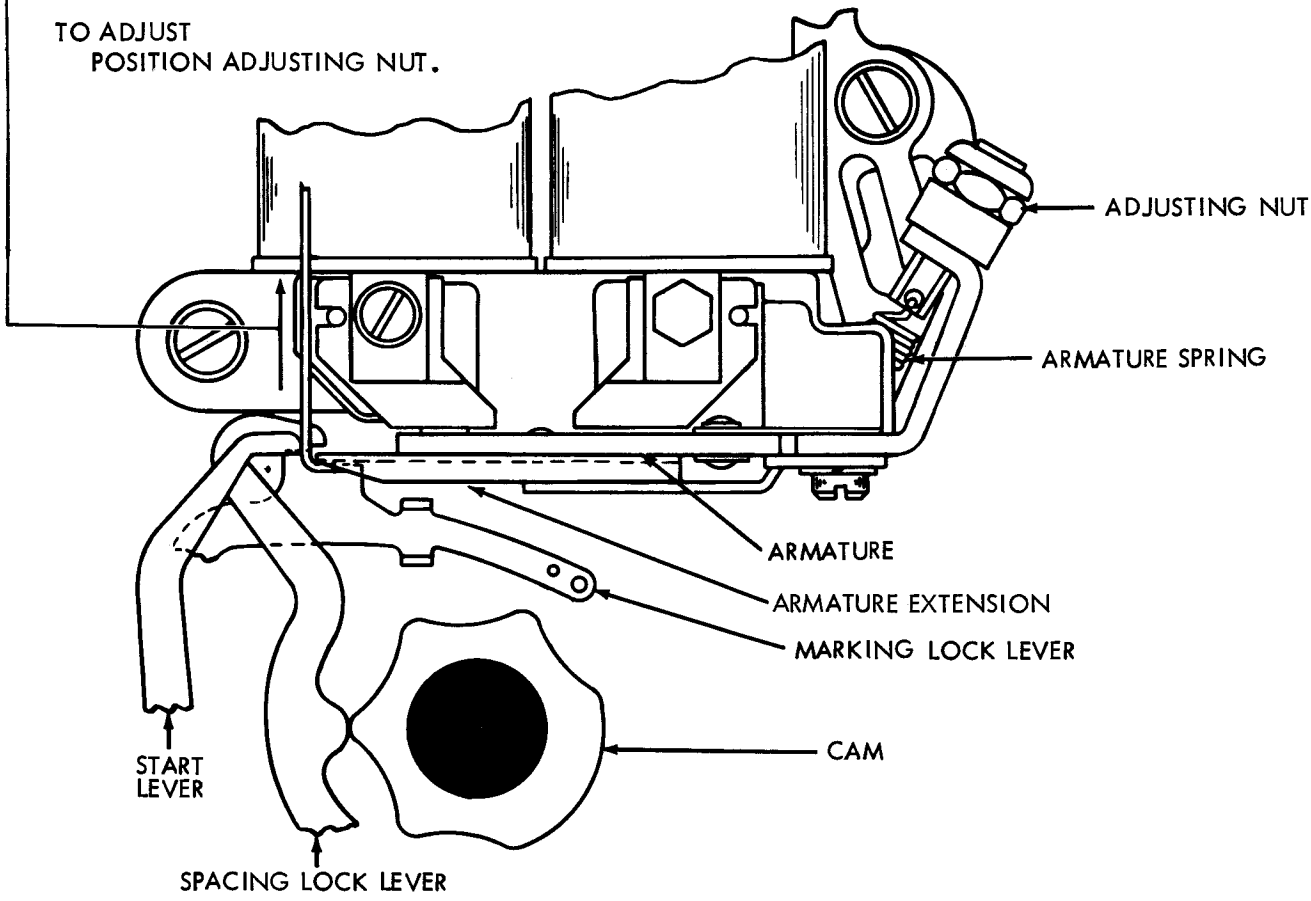

REQUIREMENT (FINAL)
SEE SELECTOR RECEIVING MARGIN ADJUSTMENT (PARAGRAPH 2-13)

2.07 Selector Mechanism (Cont.)

SELECTOR ARMATURE SPRING
(FOR UNITS EMPLOYING SELECTOR ARMATURE WITH TWO ANTI-FREEZE BUTTONS ONLY).
REQUIREMENT (PRELIMINARY)

WITH LOCKING LEVERS AND START LEVER ON HIGH PART OF THEIR CAMS, SCALE APPLIED AS NEARLY VERTICAL AS POSSIBLE UNDER END OF ARMATURE EXTENSION. IT SHALL REQUIRE APPROXIMATELY THE FOLLOWING TENSIONS TO MOVE THE REAR ANTI-FREEZE BUTTON AGAINST THE MAGNET CORE:

0.060 AMPERE - APPROXIMATELY 1-1/4 OZS.
0.030 AMPERE - APPROXIMATELY 5/8 OZ.
0.500 AMPERE - APPROXIMATELY 1-3/4 OZS.

TO ADJUST
POSITION ADJUSTING NUT.

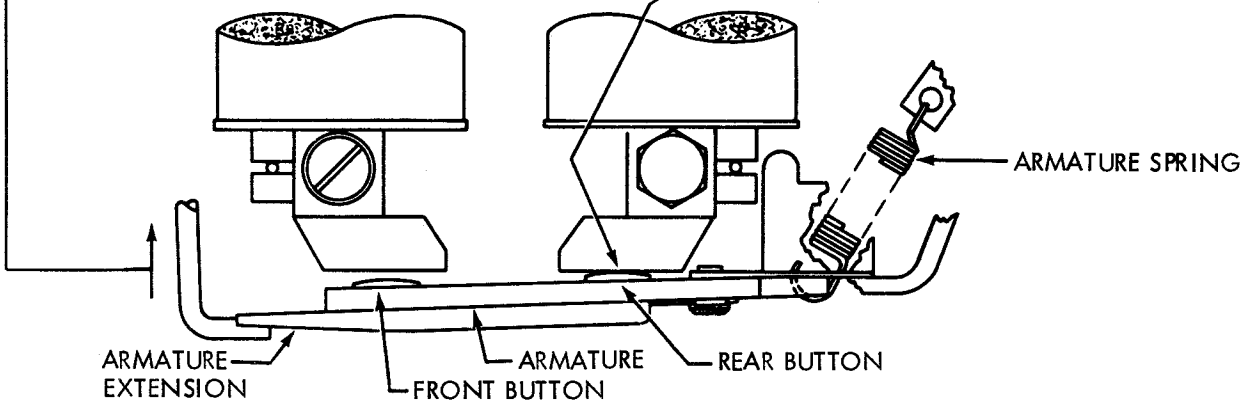

(SEE SELECTOR RECEIVING MARGIN ADJUSTMENT)

SELECTOR ARMATURE SPRING
REQUIREMENT (FINAL)

WHEN A DISTORTION TEST SET IS AVAILABLE, THE SELECTOR ARMATURE SPRING TENSION SHOULD BE REFINED, IF NECESSARY, TO OBTAIN SATISFACTORY RECEIVING MARGINS. THE FRONT ANTI-FREEZE BUTTON MUST CONTACT THE MAGNET CORE WHEN THE MAGNET COILS ARE ENERGIZED.

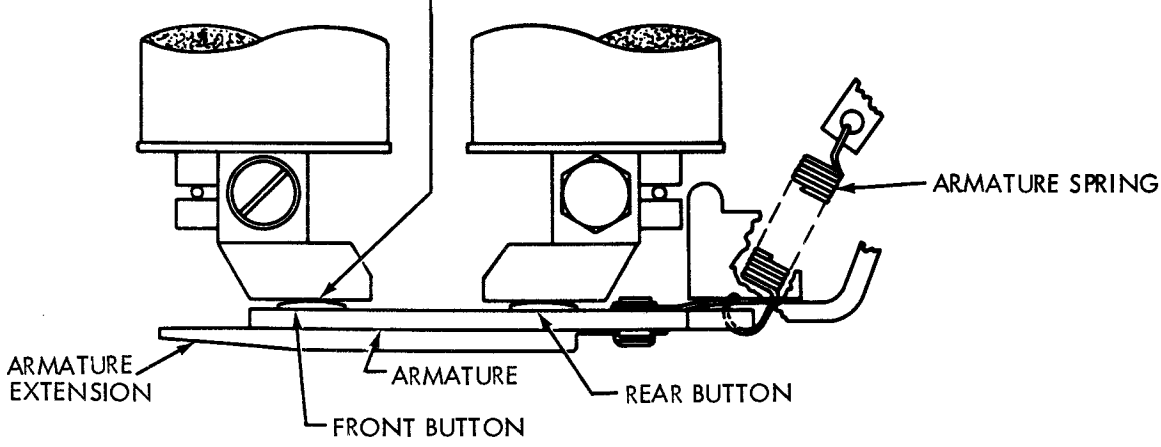

REQUIREMENT (FINAL)

SEE SELECTOR RECEIVING MARGIN ADJUSTMENT (PARAGRAPH 2-13)

2.08 Selector Mechanism (Cont.)

NOTE
THE APPROPRIATE PRELIMINARY SELECTOR ARMATURE SPRING TENSION ADJUSTMENT MUST BE MADE PRIOR TO THIS ADJUSTMENT.

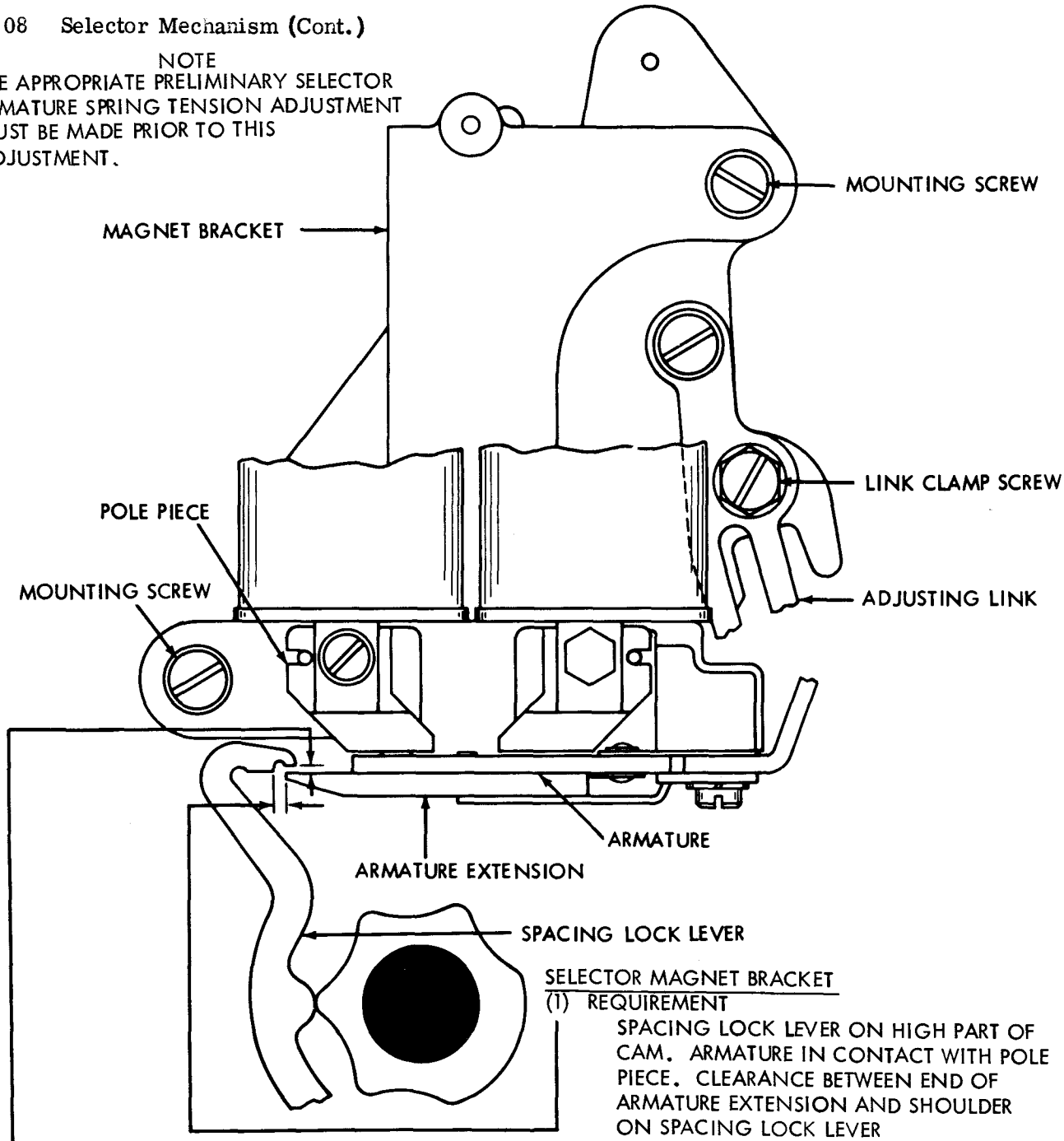

SELECTOR MAGNET BRACKET

(1) REQUIREMENT
SPACING LOCK LEVER ON HIGH PART OF CAM. ARMATURE IN CONTACT WITH POLE PIECE. CLEARANCE BETWEEN END OF ARMATURE EXTENSION AND SHOULDER ON SPACING LOCK LEVER
MIN. 0.020 INCH
MAX. 0.035 INCH

TO ADJUST
LOOSEN TWO MAGNET BRACKET MOUNTING SCREWS AND ADJUSTING LINK CLAMP SCREW. POSITION MAGNET BRACKET BY MEANS OF ADJUSTING LINK AND TIGHTEN LINK CLAMP SCREW ONLY.

(2) REQUIREMENT
SPACING LOCK LEVER ON HIGH PART OF CAM. ARMATURE IN CONTACT WITH POLE PIECE. SOME CLEARANCE BETWEEN UPPER SURFACE OF ARMATURE EXTENSION AND LOWER SURFACE OF UPPER STEP OF SPACING LOCK LEVER WHEN LOCK LEVER IS HELD DOWWARD.
MAX. 0.003 INCH

TO ADJUST
POSITION UPPER END OF MAGNET BRACKET. TIGHTEN TWO MAGNET BRACKET MOUNTING SCREWS. RECHECK REQUIREMENT (1).

NOTE
SEE FOLLOWING PAGE FOR REQUIREMENT (3).

2.09 Selector Mechanism (Cont.)

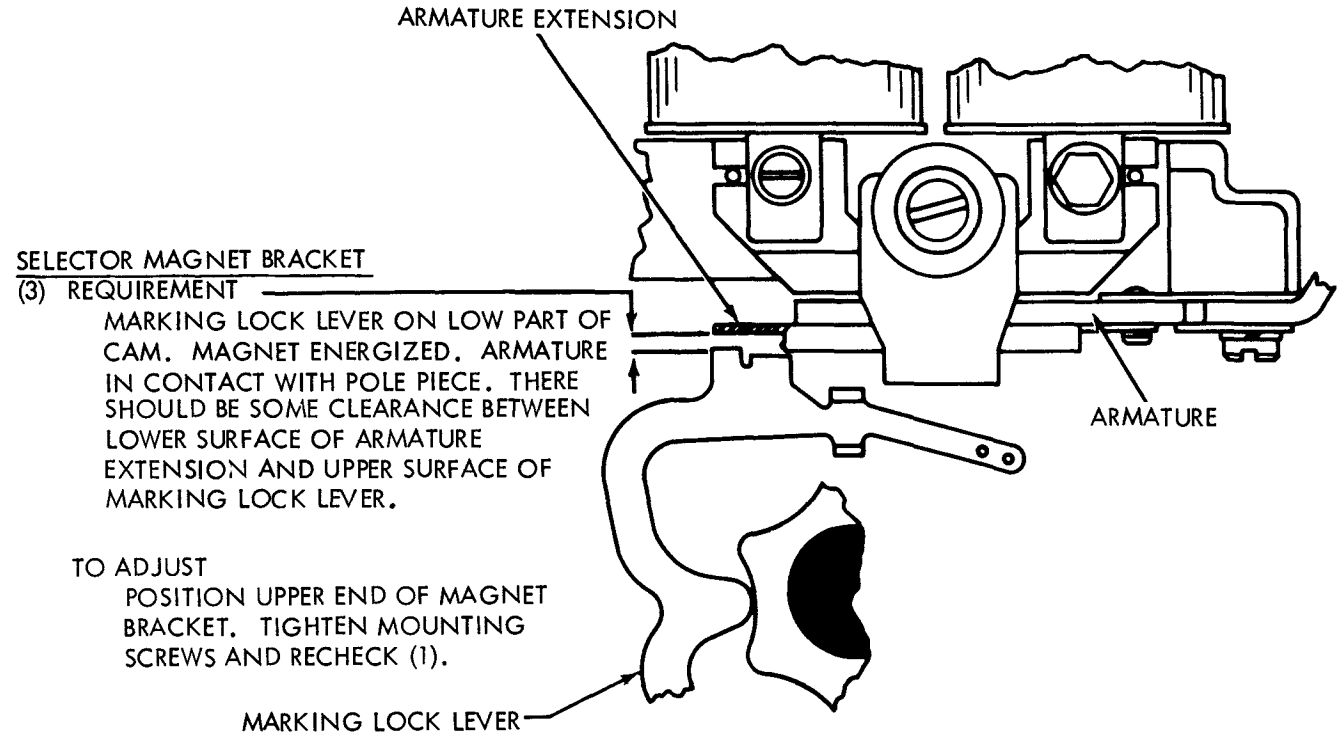

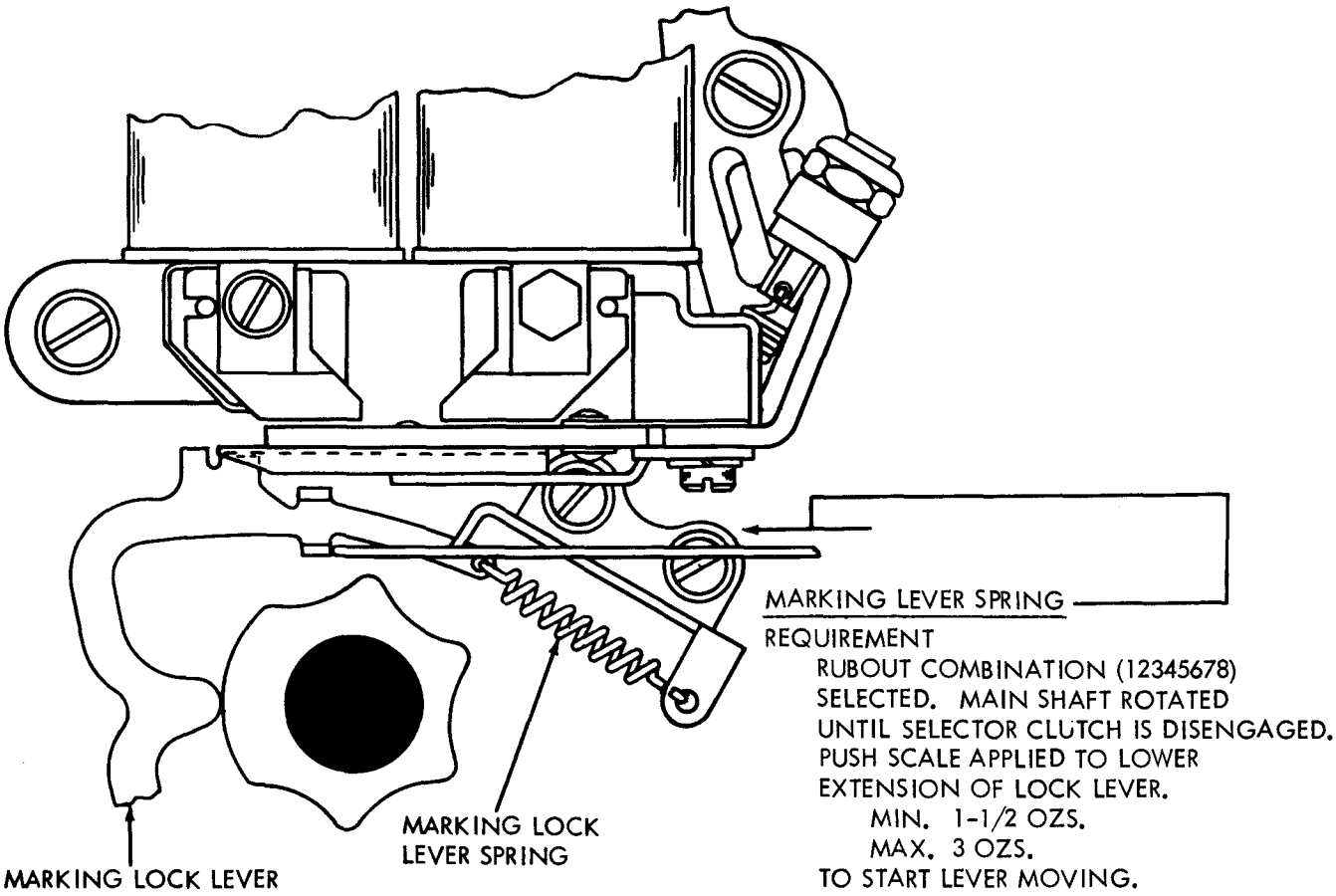

2.10 Selector Mechanism (Cont.)

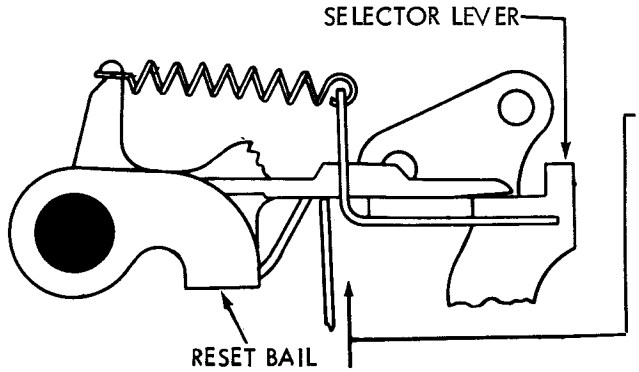

SELECTOR PUSH LEVER SPRING

REQUIREMENT
PUSH LEVER IN SPACING POSITION
MIN. 1 OZ.
MAX. 2 OZ.
TO MOVE PUSH LEVERS FROM SELECTOR LEVERS ON ALL PUSH LEVERS EXCEPT THAT ONE WHICH IS FIRST IN SEQUENCE OF SELECTION.
MIN. 2 OZS.
MAX. 3 OZS.
TO MOVE THIS PUSH LEVER AWAY FROM ITS SELECTOR LEVER. THIS SPRING IS DISTINGUISHED BY ITS COPPER COLOR.

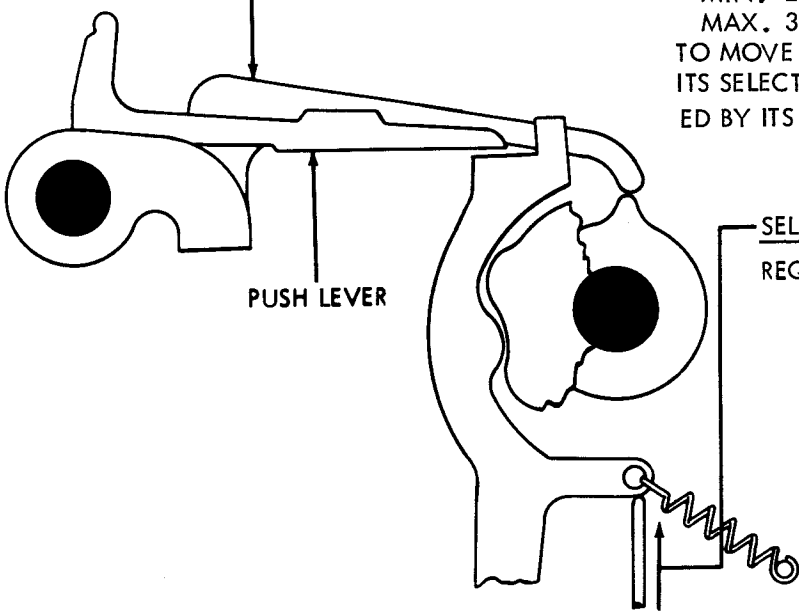

SELECTOR LEVER SPRING

REQUIREMENT
TYPING UNIT UPSIDE DOWN.
RESET BAIL ON PEAK OF ITS CAM.
MIN. 1-1/4 OZS.
MAX. 1-1/2 OZS.
TO START EACH LEVER MOVING CHECK EIGHT SPRINGS. IF NECESSARY, UNHOOK START LEVER SPRING TO CHECK NO. 4 SELECTOR LEVER SPRING.

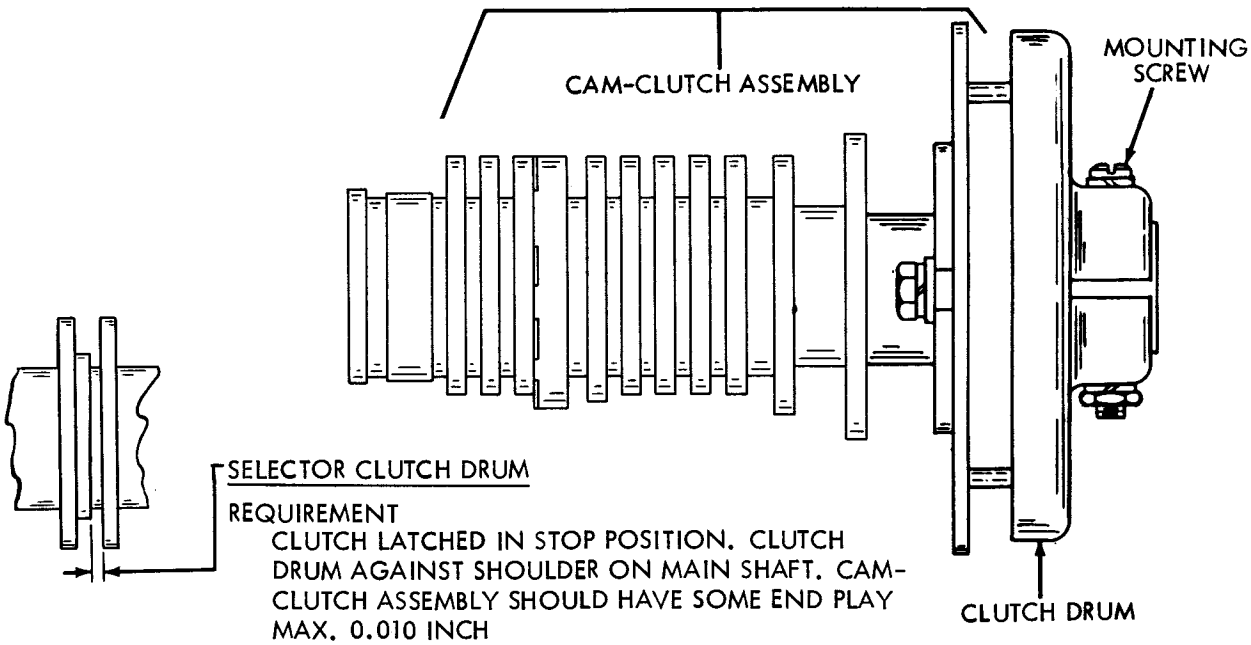

SELECTOR CLUTCH DRUM

REQUIREMENT
CLUTCH LATCHED IN STOP POSITION. CLUTCH DRUM AGAINST SHOULDER ON MAIN SHAFT. CAM-CLUTCH ASSEMBLY SHOULD HAVE SOME END PLAY MAX. 0.010 INCH
TO ADJUST
POSITION CLUTCH DRUM WITH MOUNTING SCREW LOOSENED.

2.11 Selector Mechanism (Cont.)

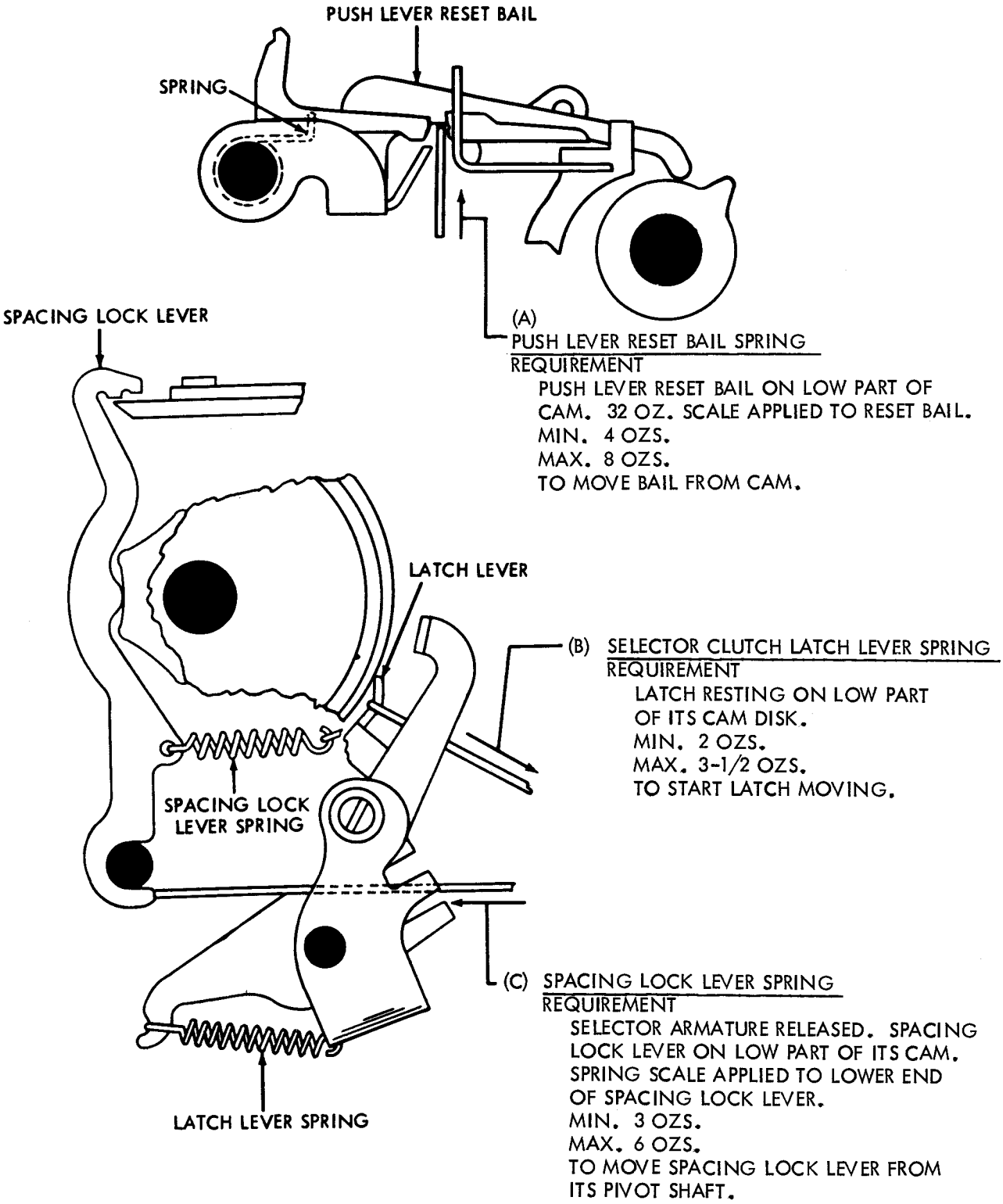

2.12 Selector Mechanism (Cont.)

(A) RANGE FINDER KNOB PHASING

REQUIREMENT

WITH RANGE FINDER KNOB TURNED TO EITHER END OF RACK, ZERO MARK ON SCALE SHOULD BE IN LINE WITH SCRIBED LINE ON RANGE FINDER PLATE ± 3 POINTS.

TO ADJUST

REMOVE MOUNTING NUT, DISENGAGE KNOB FROM RACK AN POSITION KNOB. RE-ENGAGE KNOB WITH RACK AND REPLACE MOUNTING NUT.

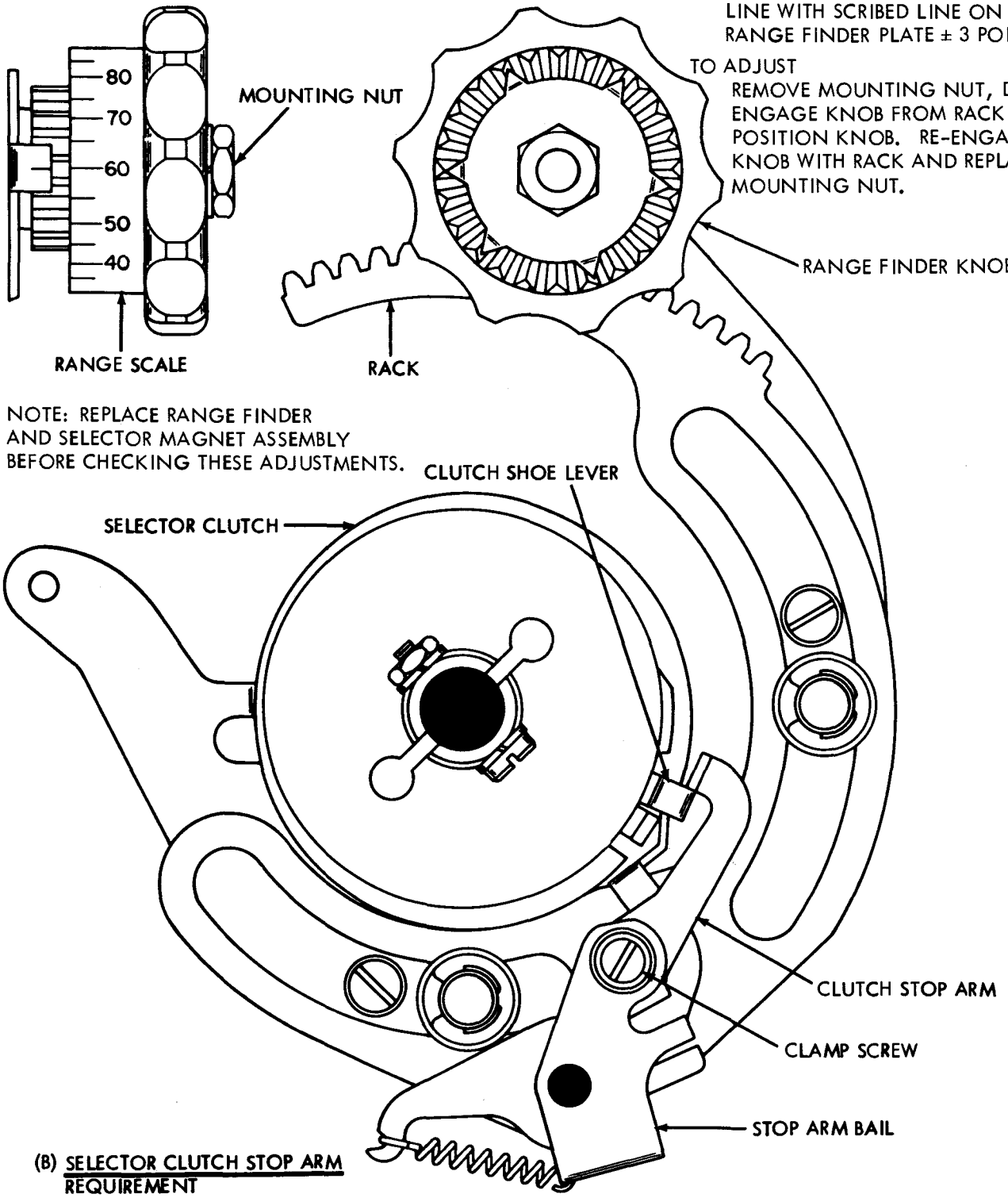

NOTE: REPLACE RANGE FINDER AND SELECTOR MAGNET ASSEMBLY BEFORE CHECKING THESE ADJUSTMENTS.

(B) SELECTOR CLUTCH STOP ARM

REQUIREMENT

RANGE SCALE SET AT 60. SELECTOR CLUTCH DISENGAGED. ARMATURE IN MARKING POSITION. CLUTCH STOP ARM SHOULD ENGAGE CLUTCH SHOE LEVER BY APPROXIMATELY FULL THICKNESS OF SHOE LEVER.

TO ADJUST

POSITION STOP ARM ON STOP ARM BAIL WITH CLAMP SCREW LOOSENED.

2.13 Selector Mechanism (Cont.)

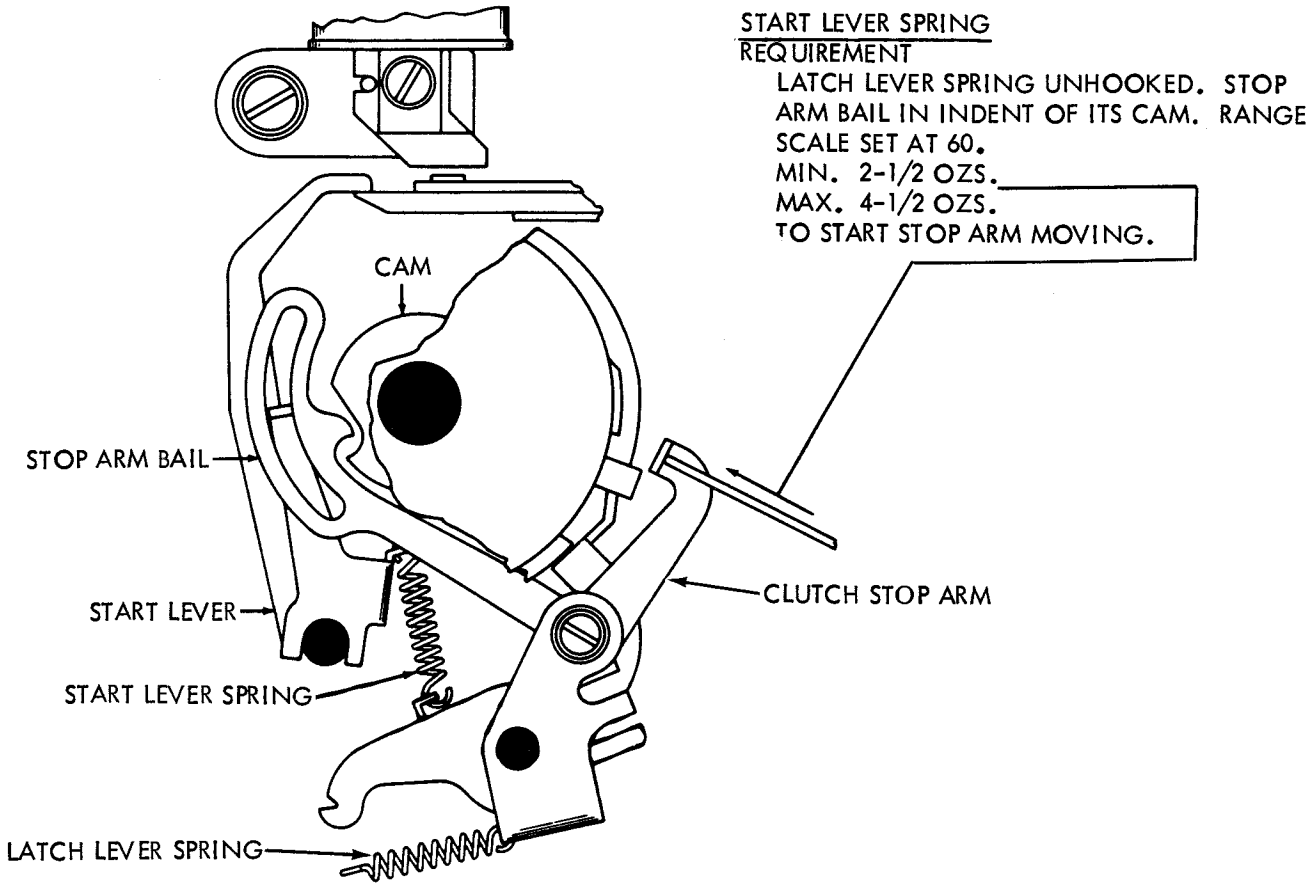

SELECTOR RECEIVING MARGIN

REQUIREMENT (FOR UNITS EMPLOYING ARMATURE WITH ONE ANTI-FREEZE BUTTON)

WHEN A SIGNAL DISTORTION TEST SET IS USED FOR DETERMINING THE RECEIVING MARGINS OF THE SELECTOR, AND WHERE THE CONDITION OF THE COMPONENTS IS EQUIVALENT TO THAT OF NEW EQUIPMENT, THE RANGE AND DISTORTION TOLERANCES BELOW SHOULD BE MET.

REQUIREMENT (FOR UNITS EMPLOYING ARMATURE WITH TWO ANTI-FREEZE BUTTONS)

WHEN A DISTORTION TEST SET IS AVAILABLE, THE SELECTOR ARMATURE SPRING TENSION SHOULD BE REFINED, IF NECESSARY, TO OBTAIN SATISFACTORY RECEIVING MARGINS. THE FRONT ANTI-FREEZE BUTTON MUST CONTACT THE MAGNET CORE WHEN THE MAGNET COILS ARE ENERGIZED.

TO ADJUST: REFINE THE SELECTOR ARMATURE SPRING (PARAGRAPH 2.06 OR 2.07)

SELECTOR RECEIVING MARGIN MINIMUM REQUIREMENTS

CURRENT	SPEED IN W.P.M.	POINTS RANGE WITH ZERO DISTORTION	PERCENTAGE OF MARKING AND SPACING BIAS	END DISTORTION TOLERATED WITH SCALE AT BIAS OPTIMUM SETTING
0.060 AMP (WINDINGS PARALLEL)	100	65	35	30
0.500 AMP (WINDINGS PARALLEL)	100	72	38	35

2.14 Function Mechanism

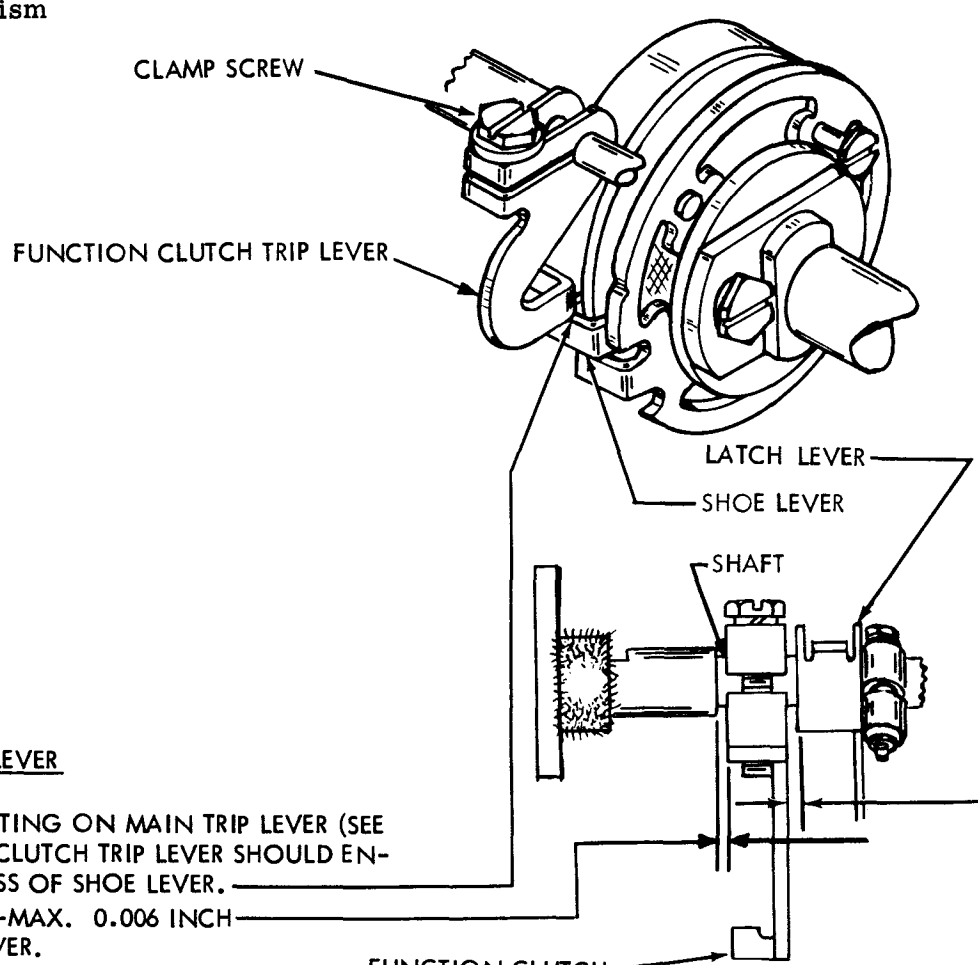

(A)

FUNCTION CLUTCH TRIP LEVER

REQUIREMENT

(1) WITH RELEASE RESTING ON MAIN TRIP LEVER (SEE BELOW), FUNCTION CLUTCH TRIP LEVER SHOULD ENGAGE FULL THICKNESS OF SHOE LEVER.

(2) MIN. SOME----MAX. 0.006 INCH END PLAY IN TRIP LEVER.

TO ADJUST

POSITION TRIP LEVER ON ITS SHAFT WITH CLAMP SCREW LOOSENED.

(B)

RESET ARM

TO CHECK

TRIP FUNCTION CLUTCH AND POSITION MAIN SHAFT SO THAT RESET ARM IS HELD IN ITS HIGHEST POSITION BY CAM PIN.

REQUIREMENT

(1) CLEARANCE BETWEEN RELEASE AND MAIN TRIP LEVER:

MIN. 0.010 INCH----MAX. 0.030 INCH

(2) LATCH LEVER END PLAY:

MIN. SOME----MAX. 0.010 INCH

TO ADJUST

POSITION RESET ARM WITH CLAMP SCREW LOOSENED.

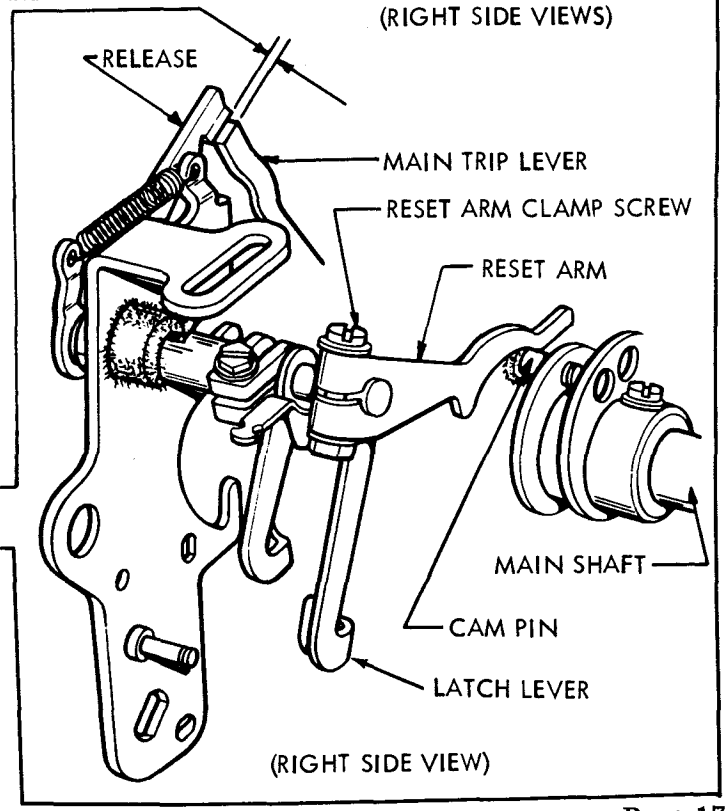

2.15 Function Mechanism (Cont.)

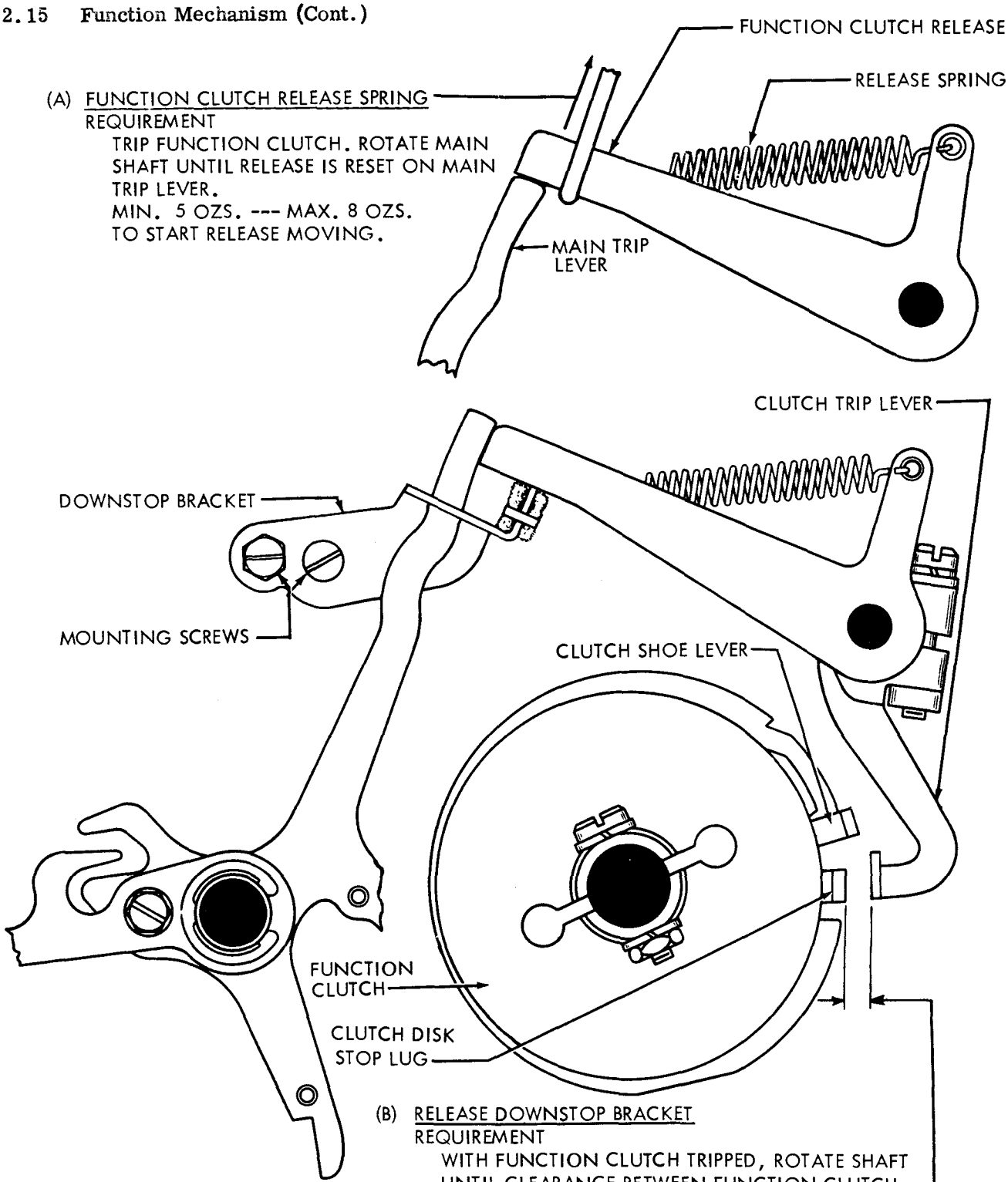

(A) FUNCTION CLUTCH RELEASE SPRING

REQUIREMENT

TRIP FUNCTION CLUTCH. ROTATE MAIN SHAFT UNTIL RELEASE IS RESET ON MAIN TRIP LEVER.
MIN. 5 OZS. --- MAX. 8 OZS.
TO START RELEASE MOVING.

(B) RELEASE DOWNSTOP BRACKET

REQUIREMENT

WITH FUNCTION CLUTCH TRIPPED, ROTATE SHAFT UNTIL CLEARANCE BETWEEN FUNCTION CLUTCH DISK STOP LUG AND CLUTCH STOP LEVER IS AT A MINIMUM. RELEASE RESTING AGAINST DOWNSTOP BRACKET. CLEARANCE BETWEEN FUNCTION CLUTCH DISK STOP LUG AND STOP LEVER:
MIN. 0.002 INCH --- MAX. 0.045 INCH

TO ADJUST

REMOVE TAPE GUIDE. WITH DOWNSTOP BRACKET MOUNTING SCREWS FRICTION TIGHT POSITION BRACKET.

2.16 Function Clutch Trip Mechanism

(A) FOLLOWER LEVER
REQUIREMENT
(1) WITH FOLLOWER LEVER ON HIGH PART OF CAM, CLEARANCE BETWEEN RELEASE AND MAIN TRIP LEVER:
MIN. 0.010 INCH --- MAX. 0.030 INCH

(2) SOME CLEARANCE BETWEEN MAIN TRIP LEVER AND DOWNSTOP BRACKET.
TO ADJUST
BY MEANS OF PRY POINT, POSITION ADJUSTING ARM ON FOLLOWER LEVER WITH LOCK NUT LOOSENED.

(C) MAIN TRIP LEVER SPRING
REQUIREMENT
TRIP RESET BAIL TRIP LEVER EXTENSION
MIN. 2-1/2 OZS.
MAX. 4 OZS.
TO START LEVER MOVING.

(B) ADJUSTING ARM TORSION SPRING
REQUIREMENT
WITH FOLLOWER LEVER ON LOW PART OF TRIP CAM AND MAIN TRIP LEVER HELD AWAY FROM ADJUSTING ARM
MIN. 1 OZ.
MAX. 4 OZS.
TO START ADJUSTING LEVER MOVING.

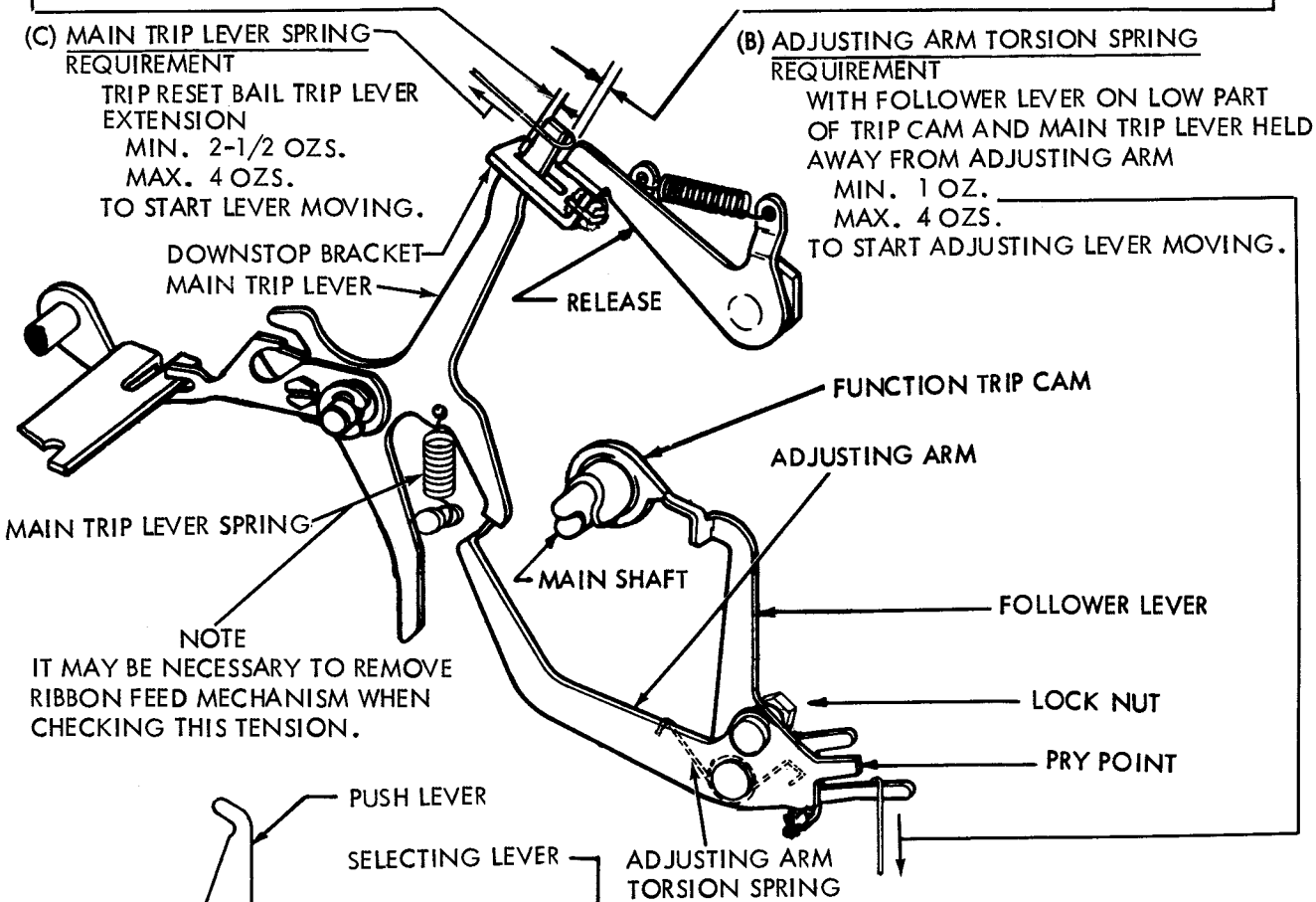

NOTE
IT MAY BE NECESSARY TO REMOVE RIBBON FEED MECHANISM WHEN CHECKING THIS TENSION.

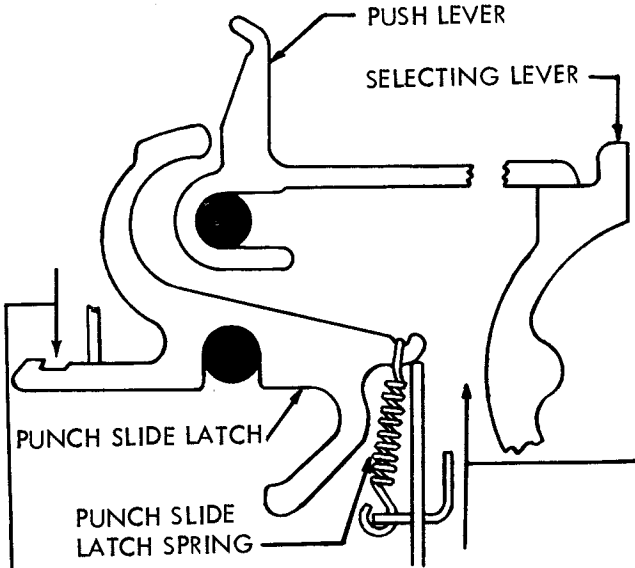

(D) PUNCH AND FEED SLIDE LATCH SPRINGS
TO CHECK
SELECT RUBOUT CODE COMBINATION (12345678). POSITION ROCKER BAIL TO EXTREME LEFT. STRIP PUSH LEVERS FROM SELECTING LEVERS.
REQUIREMENT
MIN. 1 OZ.
MAX. 3 OZS.
TO START LATCH MOVING.
TO CHECK (TWO SHAFT UNITS)
RANGE SCALE AT 60. SELECT RUBOUT COMBINATION. CLUTCHES DISENGAGED AND LATCHED.
REQUIREMENT
MIN. 3/4 OZ. ----MAX. 1-3/4 OZS.
TO START LATCH MOVING.

2.17 Rocker Bail Mechanism

(A)

ROCKER BAIL LOWER ROLLER

REQUIREMENT

WITH ROCKER BAIL POSITIONED TO ITS EXTREME LEFT AND UPPER ROLLER IN CONTACT WITH FUNCTION CAM: MIN. SOME----MAX. 0.003 INCH CLEARANCE BETWEEN CAM AND LOWER ROLLER AT POINT OF LEAST CLEARANCE.

TO ADJUST

POSITION LOWER ROLLER MOUNTING SCREW IN ELONGATED SLOT WITH LOCK NUT LOOSENED. CHECK THROUGHOUT A COMPLETE REVOLUTION FOR BINDS.

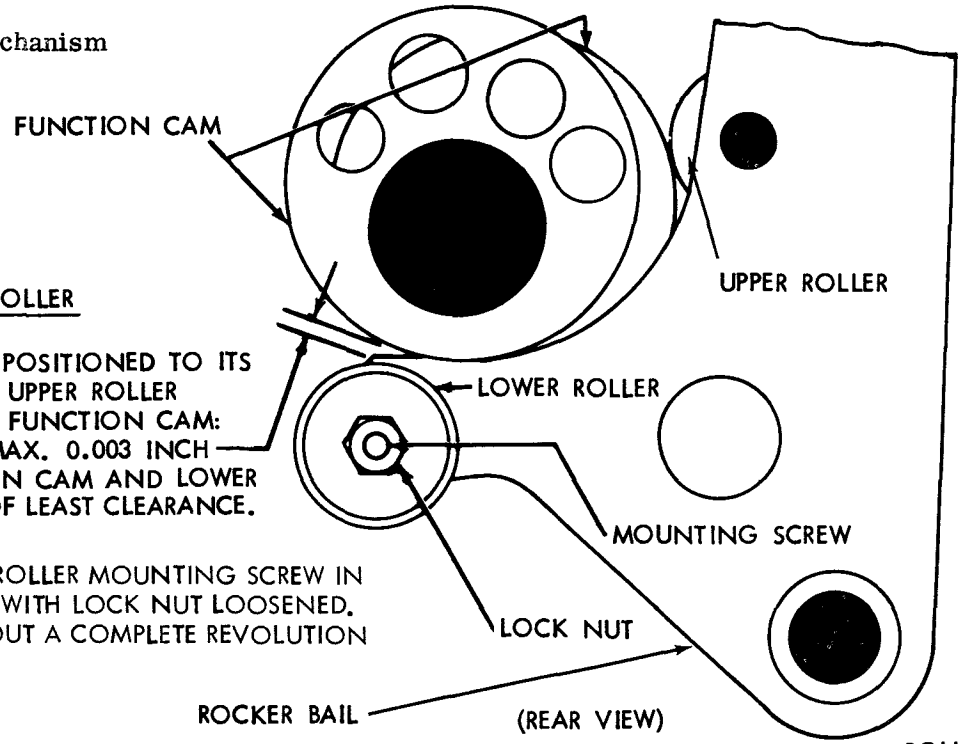

(B)

ROCKER BAIL GUIDE BRACKET

REQUIREMENT

ROCKER BAIL ROLLERS SHOULD ENGAGE FULL THICKNESS OF FUNCTION CAM.

TO ADJUST

POSITION ROCKER BAIL AND GUIDE BRACKET WITH GUIDE BRACKET MOUNTING SCREWS LOOSENED.

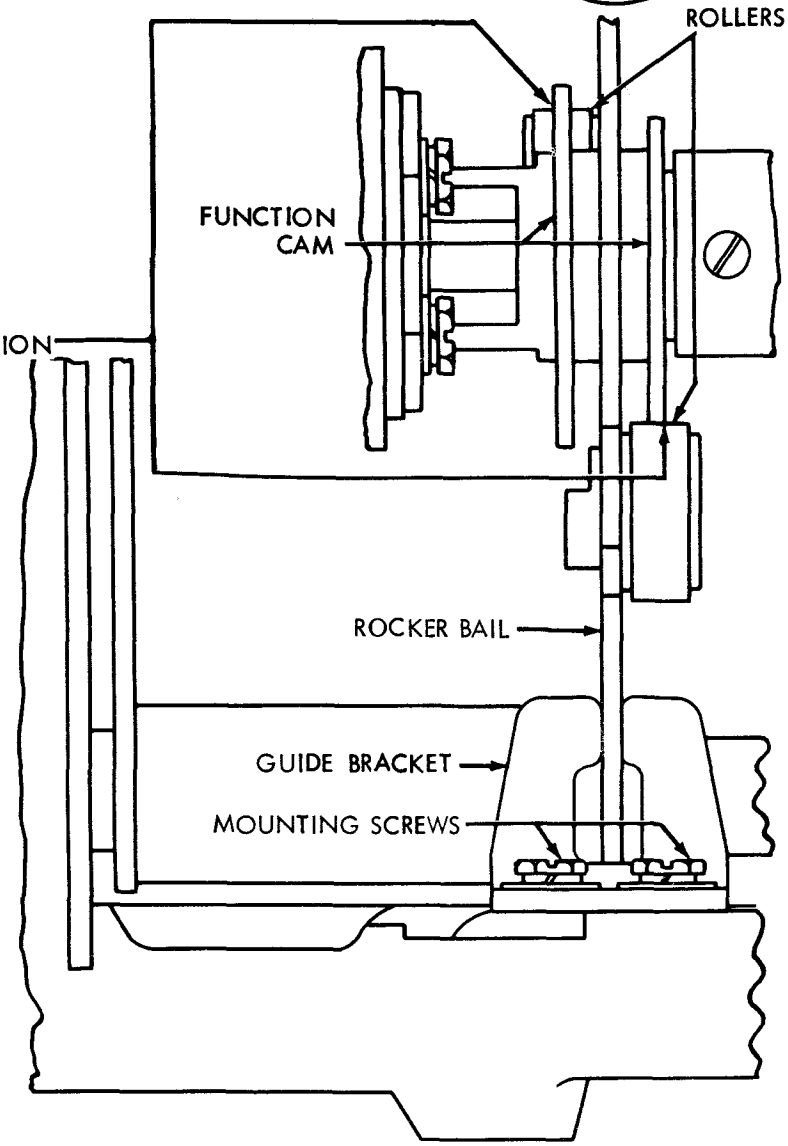

(RIGHT SIDE VIEW)

2.18 Punch Mechanism

PERFORATOR POSITION (PRELIMINARY)

REQUIREMENT

THE PERFORATOR MECHANISM MOUNTING SCREW BENEATH PUNCH BLOCK AND MOUNTING SCREW AT LOWER EDGE OF PERFORATOR MECHANISM BACKPLATE SHALL BE LOCATED CENTRALLY WITHIN THEIR RESPECTIVE MOUNTING HOLES.

NOTE

THE MOUNTING HOLES ARE OVERSIZE TO FACILITATE USE OF PERFORATOR MECHANISM ON THE TYPING REPERFORATOR.

TO ADJUST

REMOVE MOUNTING SCREW AT THE LOWER EDGE OF PERFORATOR MECHANISM BACKPLATE, WITH THE TWO REMAINING BACKPLATE MOUNTING SCREWS AND MOUNTING BRACKET SCREW FRICTION TIGHT, POSITION PERFORATOR MECHANISM SO THAT THE TAPPED HOLE OF THE FRAME IS CENTRALLY LOCATED (AS GAUGED BY EYE) WITHIN LARGE BODY HOLE OF PUNCH MECHANISM BACKPLATE. TIGHTEN THE TWO BACKPLATE MOUNTING SCREWS AND RECHECK TO SEE THAT REQUIREMENT IS MET. REPLACE AND TIGHTEN THE LOWER BACKPLATE MOUNTING SCREW. TIGHTEN THE BRACKET MOUNTING SCREW.

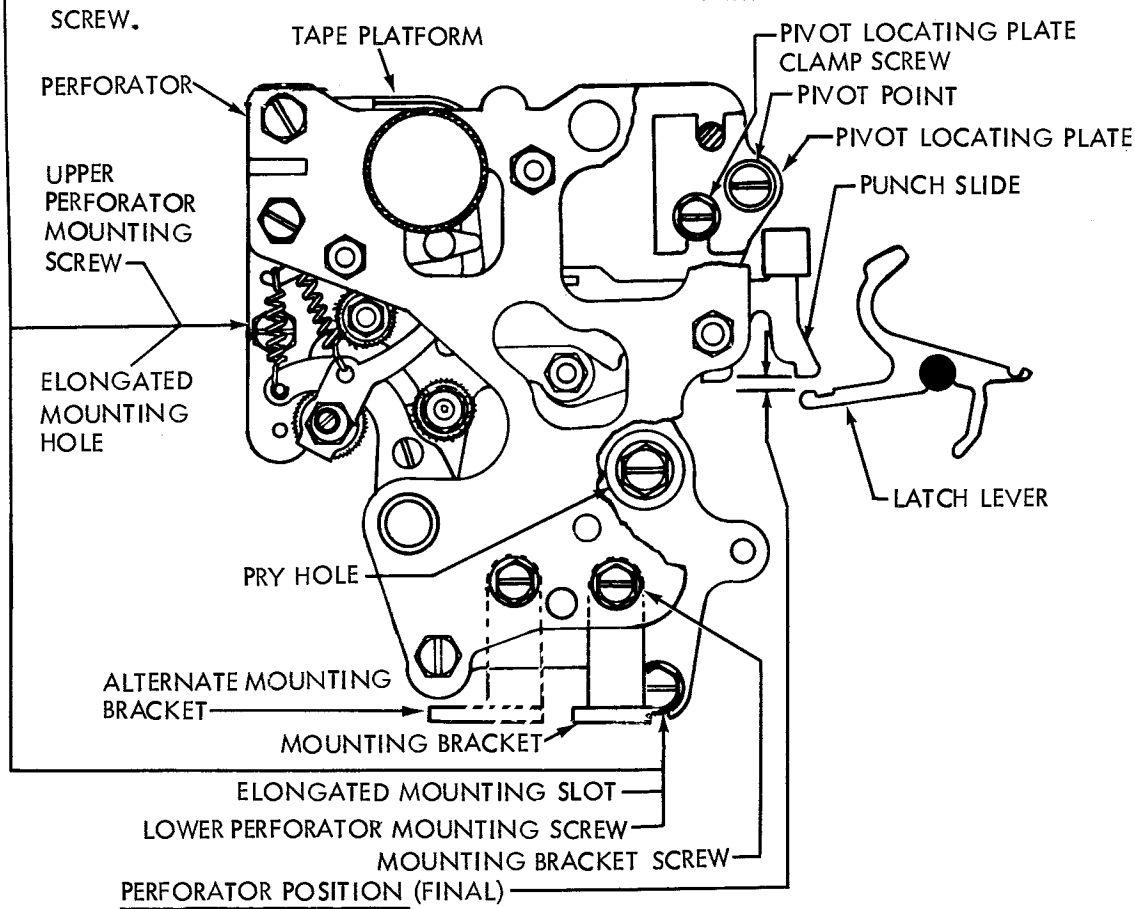

PERFORATOR POSITION (FINAL)

REQUIREMENT

WITH RUBOUT CODE COMBINATION SELECTED AND THE PUSH LEVERS IN THEIR EXTREME LEFT HAND POSITION.

MIN. 0.015 INCH --- MAX. 0.045 INCH

CLEARANCE BETWEEN THE CLOSEST LATCH LEVER AND ASSOCIATED PUNCH SLIDE.

TO ADJUST

WITH THE REAR FRAME MOUNTING SCREWS AND FRONT FRAME MOUNTING BRACKET SCREWS FRICTION TIGHT. PLACE TIP OF SCREWDRIVER BETWEEN HEXAGON HEAD SCREW AND ITS CLEARANCE HOLE RIM AND PRY UP OR DOWN TO MEET REQUIREMENTS.

2.19 Punch Mechanism (Cont.)

NOTE

BEFORE PROCEEDING WITH THE PUNCH MECHANISM ADJUSTMENTS, CHECK THE ROCKER BAIL CAM FOLLOWER ROLLER ADJUSTMENT AND LOOSEN THE PUNCH SLIDE DOWNSTOP MOUNTING NUT AND GUIDE MOUNTING STUD.

(A) TOGGLE BAIL ECCENTRIC (PRELIMINARY)

REQUIREMENT

THE INDENT (HIGH SIDE OF ECCENTRIC) SHALL BE IN ITS UPPERMOST POSITION.

TO ADJUST

WITH THE TOGGLE ECCENTRIC SHAFT LOCK NUT FRICTION TIGHT POSITION ECCENTRIC.

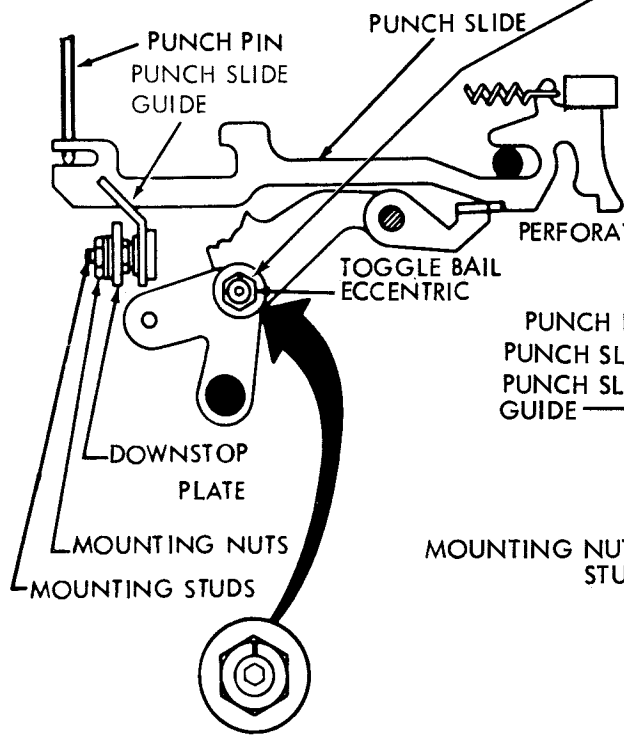

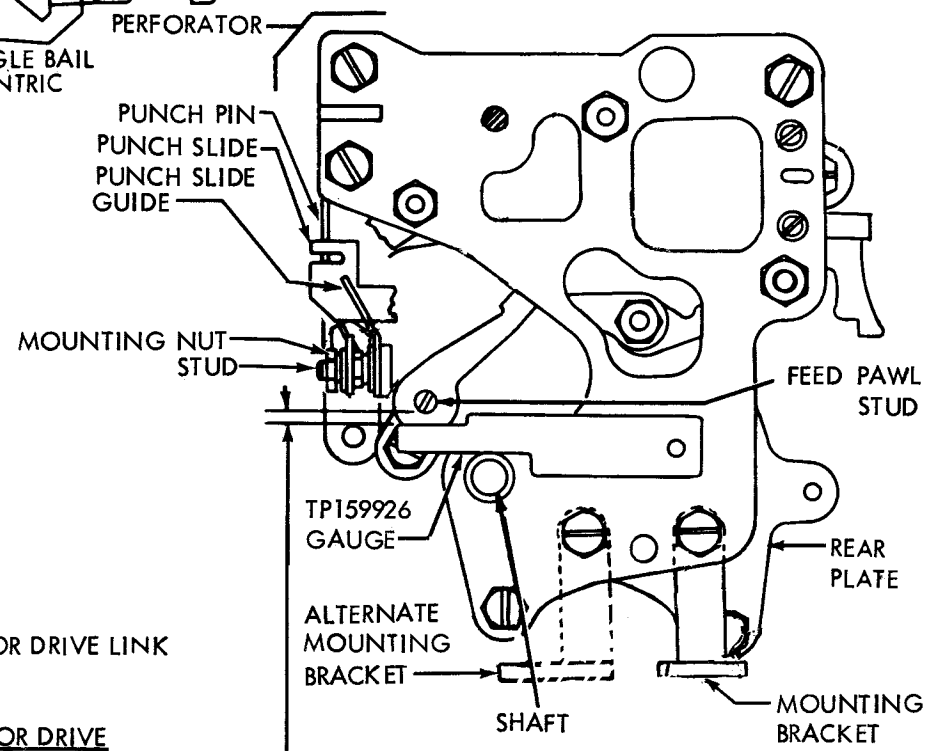

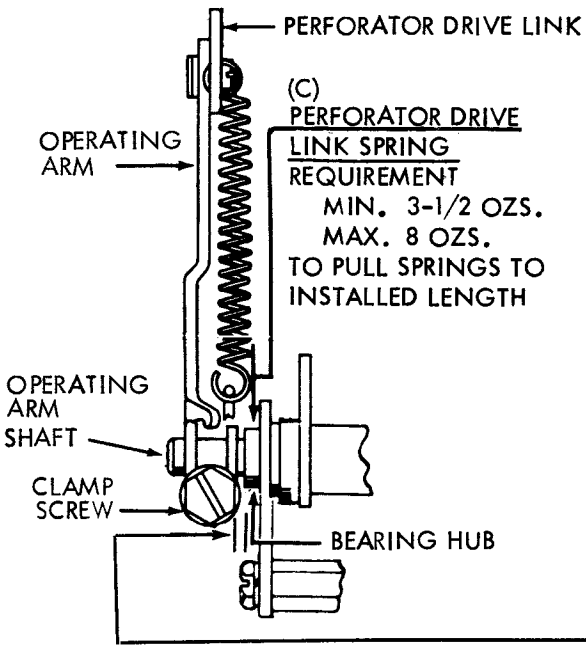

(C) PERFORATOR DRIVE LINK SPRING

REQUIREMENT

MIN. 3-1/2 OZS.
MAX. 8 OZS.
TO PULL SPRINGS TO INSTALLED LENGTH

(B) TOGGLE OPERATING ARM

(1) REQUIREMENT

TRIP FUNCTION CLUTCH AND ROTATE MAIN SHAFT UNTIL THE UPPER ROCKER BAIL ROLLER IS ON HIGH PART OF ITS CAM.

MIN. 0.002 INCH --- MAX. 0.005 INCH CLEARANCE BETWEEN FEED PAWL STUD AND THE TP 159926 GAUGE.

(2) CLEARANCE BETWEEN ARM AND OSCILLATING SHAFT BEARING HUB.

MIN. 0.002 INCH --- MAX. 0.015 INCH WITH PLAY TAKEN UP IN DIRECTION TO MAKE CLEARANCE MAXIMUM.

TO ADJUST

WITH LOCKSCREW FRICTION TIGHT, POSITION TOGGLE BAIL AND OPERATING ARM.

2.20 Punch Mechanism (Cont.)

(A) PUNCH PIN PENETRATION

REQUIREMENT

(1) WITH THE RUBOUT COMBINATION SELECTED, FUNCTION CLUTCH ENGAGED. ROTATE MAIN SHAFT UNTIL ALL PUNCH PINS ARE INTO OR ABOVE THE TAPE APERTURE IN PUNCH BLOCK. WITH THE TP159926 GAUGE IN POSITION

MIN. 0.050 INCH

CLEARANCE BETWEEN FEED PAWL STUD AND THE GAUGE.

(2) WITH RUBOUT COMBINATION SELECTED, FUNCTION CLUTCH ENGAGED. ROTATE MAIN SHAFT UNTIL ALL PUNCH PINS HAVE CLEARED THE PUNCH BLOCK. WITH THE TP159926 GAUGE IN POSITION

MAX. 0.080 INCH

CLEARANCE BETWEEN FEED PAWL STUD AND GAUGE.

TO ADJUST

REFINE THE TOGGLE BAIL ECCENTRIC ADJUSTMENT KEEPING THE INDENT TO THE RIGHT OF A VERTICAL CENTERLINE THROUGH THE SHAFT.

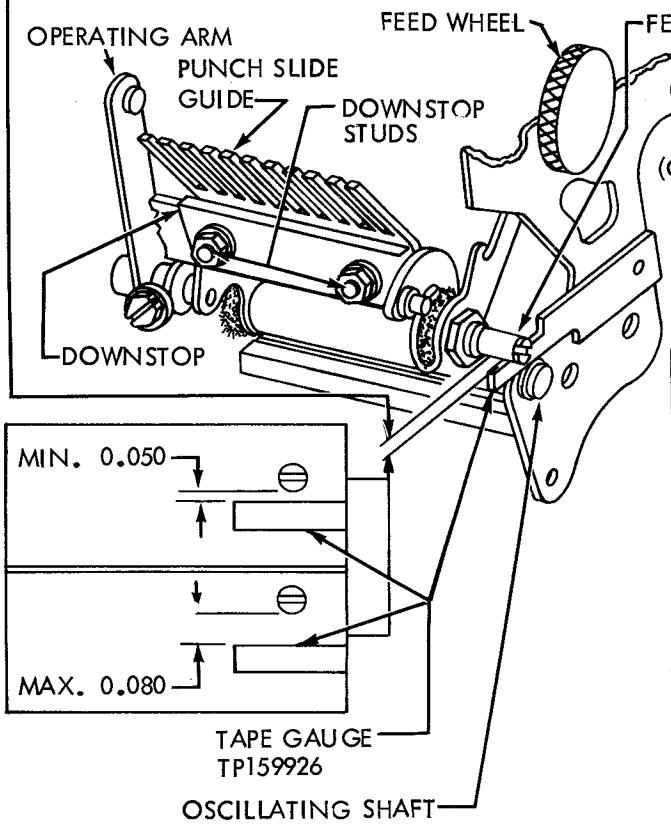

(B) PUNCH SLIDE GUIDE

REQUIREMENT

THE PUNCH SLIDES SHOULD ALIGN WITH THEIR CORRESPONDING PUNCH PINS AND BE FREE OF BINDS AFTER TIGHTENING THE GUIDE MOUNTING STUDS. EACH PUNCH SLIDE SHOULD RETURN FREELY AFTER BEING PUSHED IN NOT MORE THAN 1/16 INCH.

TO ADJUST

POSITION THE GUIDE WITH ITS MOUNTING STUDS FRICTION TIGHT.

(C) PUNCH SLIDE DOWNSTOP POSITION

REQUIREMENT

WITH FUNCTION CLUTCH DISENGAGED AND LATCHED. PLAY TAKEN UP TOWARD THE TOP, CLEARANCE BETWEEN BOTH THE FRONT AND REAR PUNCH SLIDES AND THE DOWNSTOP PLATE

MIN. SOME --- MAX. 0.008 INCH

ALL OTHER PUNCH SLIDES SHALL HAVE SOME CLEARANCE.

NOTE

TO CHECK FOR SOME CLEARANCE, PLACE UNIT IN STOP POSITION, TRIP FUNCTION TRIP MECHANISM AND LATCHES, THE PUNCH SLIDES SHALL MOVE FULLY TO THEIR OPERATED POSITION.

TO ADJUST

WITH UNIT IN STOP POSITION, LOOSEN THE TWO DOWNSTOP PLATE MOUNTING LOCK NUTS AND LOCATE THE DOWNSTOP PLATE TO MEET THE REQUIREMENT.

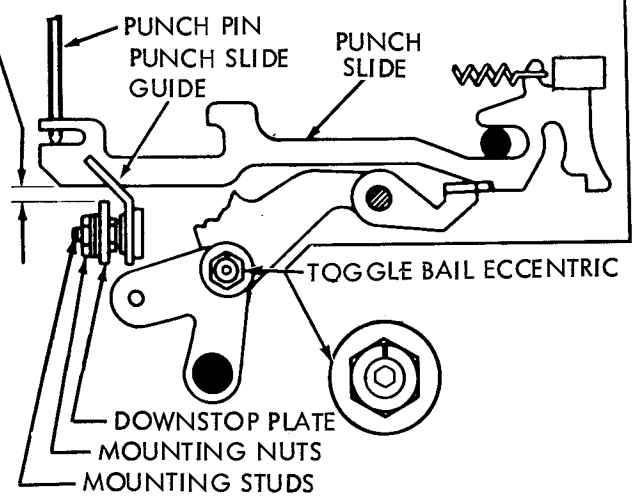

2.21 Punch Mechanism (Cont.)

RESET BAIL TRIP LEVER

REQUIREMENT

(1) MANUALLY SELECT AN ALL SPACING COMBINATION. MANUALLY ROTATE RESET BAIL TRIP LEVER. THE PUNCH SLIDE RESET BAIL SHALL TRIP BEFORE THE FUNCTION CLUTCH IS TRIPPED.

(2) WITH FUNCTION AND SELECTOR CLUTCHES DISENGAGED AND LATCHED, THE PUNCH SLIDE RESET BAIL SHALL FULLY ENGAGE THE PUNCH SLIDE LATCHING SURFACE WHEN PLAY IN PARTS IS TAKEN UP IN DIRECTION TO MAKE THE ENGAGEMENT THE LEAST.

TO ADJUST

(1) WITH TRIP LEVER EXTENSION LOCK SCREW FRICTION TIGHT AND DELETE (RUBOUT) COMBINATION SELECTED, POSITION RESET BAIL AGAINST PUNCH SLIDES. TAKE UP PLAY BETWEEN RESET BAIL AND TRIP LEVER IN A COUNTER CLOCKWISE DIRECTION. POSITION TRIP LEVER BY MEANS OF ITS PRY POINT.

(2) RECHECK REQUIREMENT (1) ABOVE AND REFINE ADJUSTMENT IF NECESSARY.

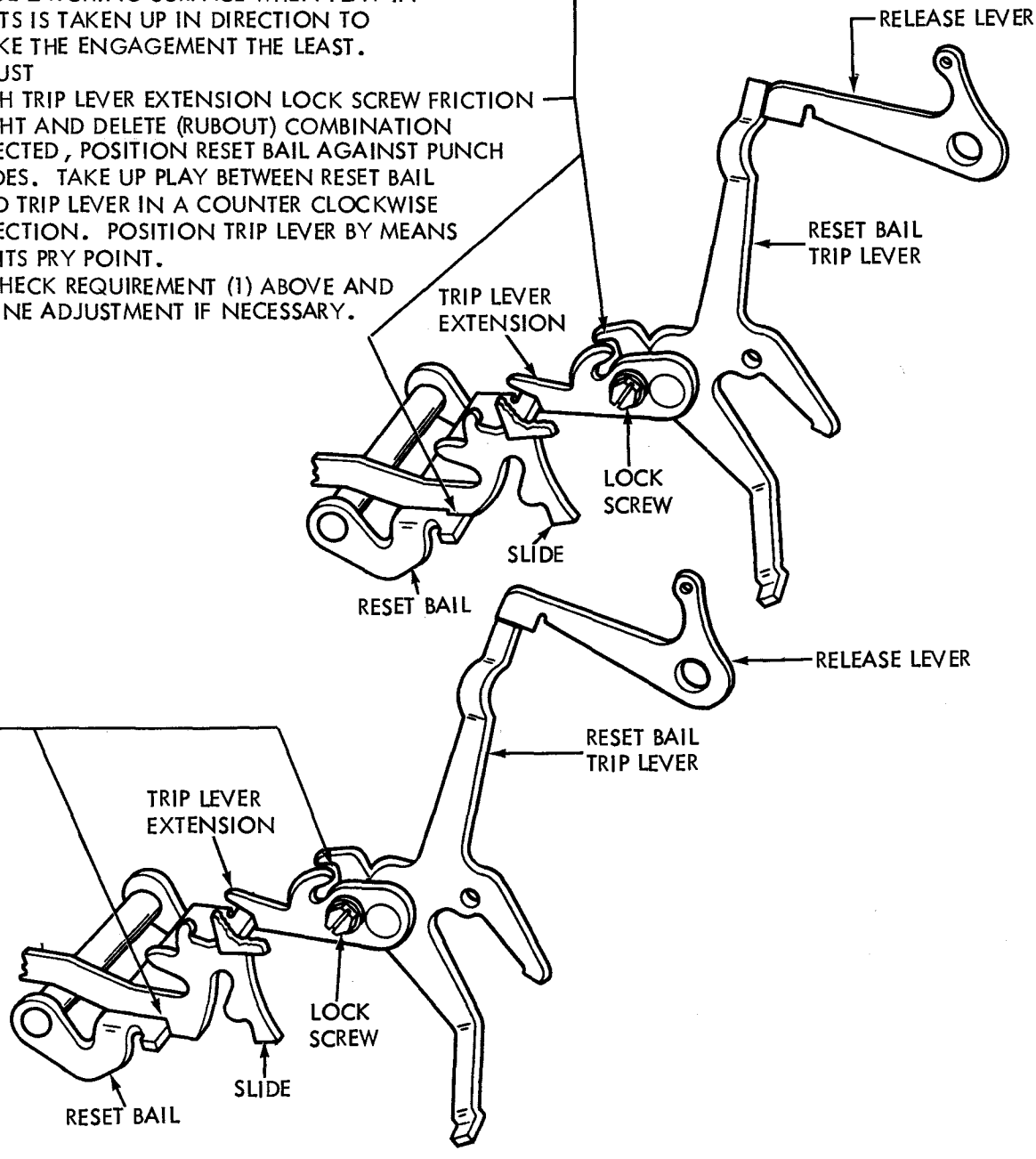

2.22 Punch Mechanism (Cont.)

(A) LATCH LEVER CLEARANCE

MANUALLY SELECT AN ALL SPACING COMBINATION. WITH FUNCTION CLUTCH DISENGAGED AND LATCHED. CLEARANCE BETWEEN PUNCH SLIDE AND ITS ASSOCIATED LATCH LEVER.

MIN. 0.015 INCH --- MAX. 0.025 INCH

FOR THE SLIDE HAVING THE LEAST CLEARANCE.

TO ADJUST

ROTATE THE RESET BAIL ECCENTRIC SHAFT WITH ITS LOCK NUT LOOSENED. KEEP THE INDENTATION IN THE ECCENTRIC ABOVE CENTER OF SHAFT.

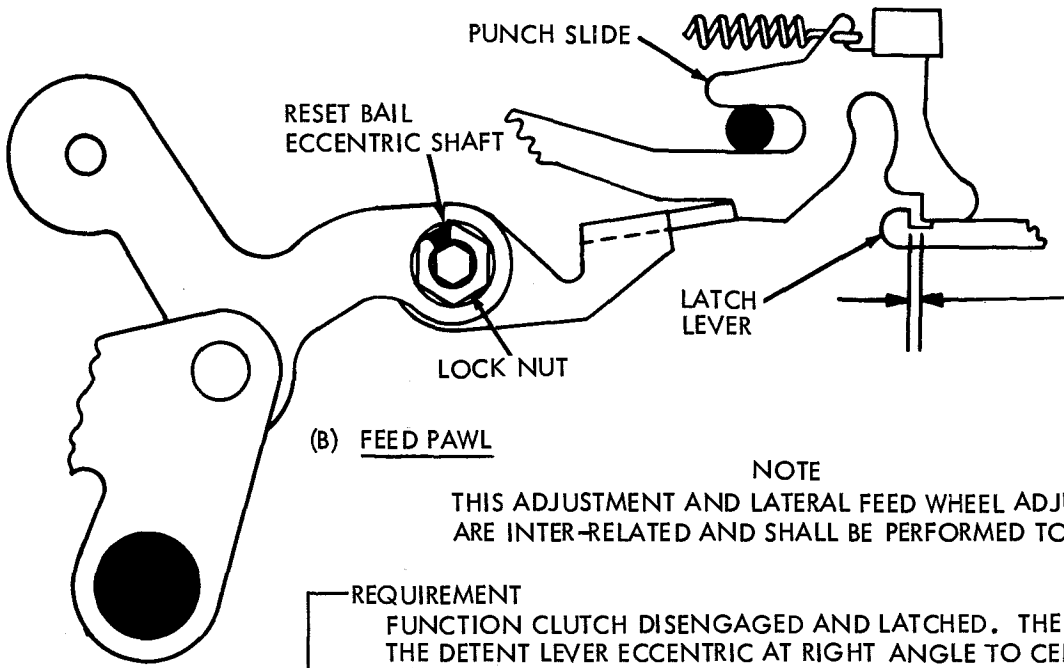

(B) FEED PAWL

NOTE

THIS ADJUSTMENT AND LATERAL FEED WHEEL ADJUSTMENT ARE INTER-RELATED AND SHALL BE PERFORMED TOGETHER.

REQUIREMENT

FUNCTION CLUTCH DISENGAGED AND LATCHED. THE INDENT OF THE DETENT LEVER ECCENTRIC AT RIGHT ANGLE TO CENTER LINE OF DETENT ARM. DETENT ROLLER IN ENGAGEMENT WITH FEED WHEEL RATCHET, AND HIGH SIDE OF FEED PAWL ECCENTRIC TO RIGHT OF ITS LOCKING SCREW. THE FEED PAWL SHALL ENGAGE THE FIRST TOOTH BELOW HORIZONTAL CENTER LINE OF RATCHET WHEEL WITH NO PERCEPTIBLE CLEARANCE.

TO ADJUST

ROTATE THE FEED PAWL ECCENTRIC WITH LOCK SCREW LOOSENED.

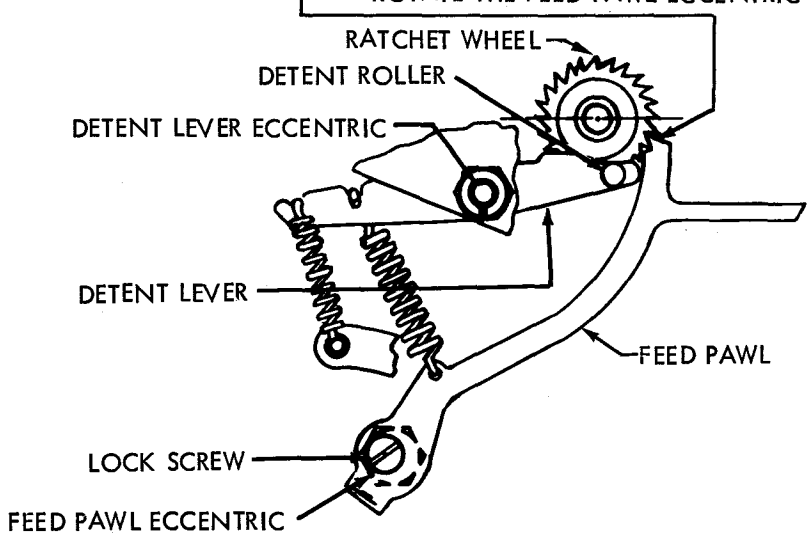

2.23 Punch Mechanism (Cont.)

(FOR LATEST DESIGN SEE PARAGRAPH 2-25)

LATERAL AND FRONT TO REAR FEED WHEEL POSITION (EARLY DESIGN)

REQUIREMENT

WITH THE REPERFORATOR OPERATING UNDER POWER, OBTAIN A TAPE SAMPLE CONSISTING OF A SERIES OF "SPACE" PERFORATIONS, BY A VISUAL INSPECTION OF THE PERFORATED FEED HOLES, LATERALLY AND FRONT TO REAR, THE INDENTATIONS OF THE FEED WHEEL SHALL BE FULLY PUNCHED OUT.

TO ADJUST

(1) TO MEET THE LATERAL REQUIREMENT. LOOSEN THE DETENT ECCENTRIC STUD LOCK NUT AND ROTATE THE DETENT ECCENTRIC CLOCKWISE TO MOVE THE FEED WHEEL PERFORATIONS TOWARDS THE LEAD EDGE OF THE FEED HOLE AND ROTATE THE DETENT ECCENTRIC COUNTER CLOCKWISE TO MOVE THE FEED WHEEL PERFORATION TOWARDS THE TRAILING EDGE OF THE FEED HOLE. REFINE THE FEED PAWL ADJUSTMENT.

(2) TO ADJUST

TO MEET THE FRONT TO REAR REQUIREMENT WITH RESPECT TO THE REFERENCE EDGE OF THE TAPE, LOOSEN THE ADJUSTING SCREW LOCK NUT AND POSITION THE ADJUSTING SCREW. TO MOVE THE INDENTATIONS IN THE TAPE AWAY FROM THE REFERENCE EDGE OF THE TAPE, MOVE THE FEED WHEEL TOWARDS THE FRONT PLATE OF THE PUNCH MECHANISM BY ROTATING THE ADJUSTING SCREW COUNTER CLOCKWISE. TO MOVE THE INDENTATIONS IN THE TAPE TOWARDS THE REFERENCE EDGE OF THE TAPE, MOVE THE FEED WHEEL TOWARDS THE BACKPLATE OF THE PUNCH MECHANISM BY ROTATING THE ADJUSTING SCREW CLOCKWISE. REFINE THE DETENT ADJUSTMENT TO ALIGN THE LATERAL INDENTATIONS OF THE FEED WHEEL IF REQUIRED.

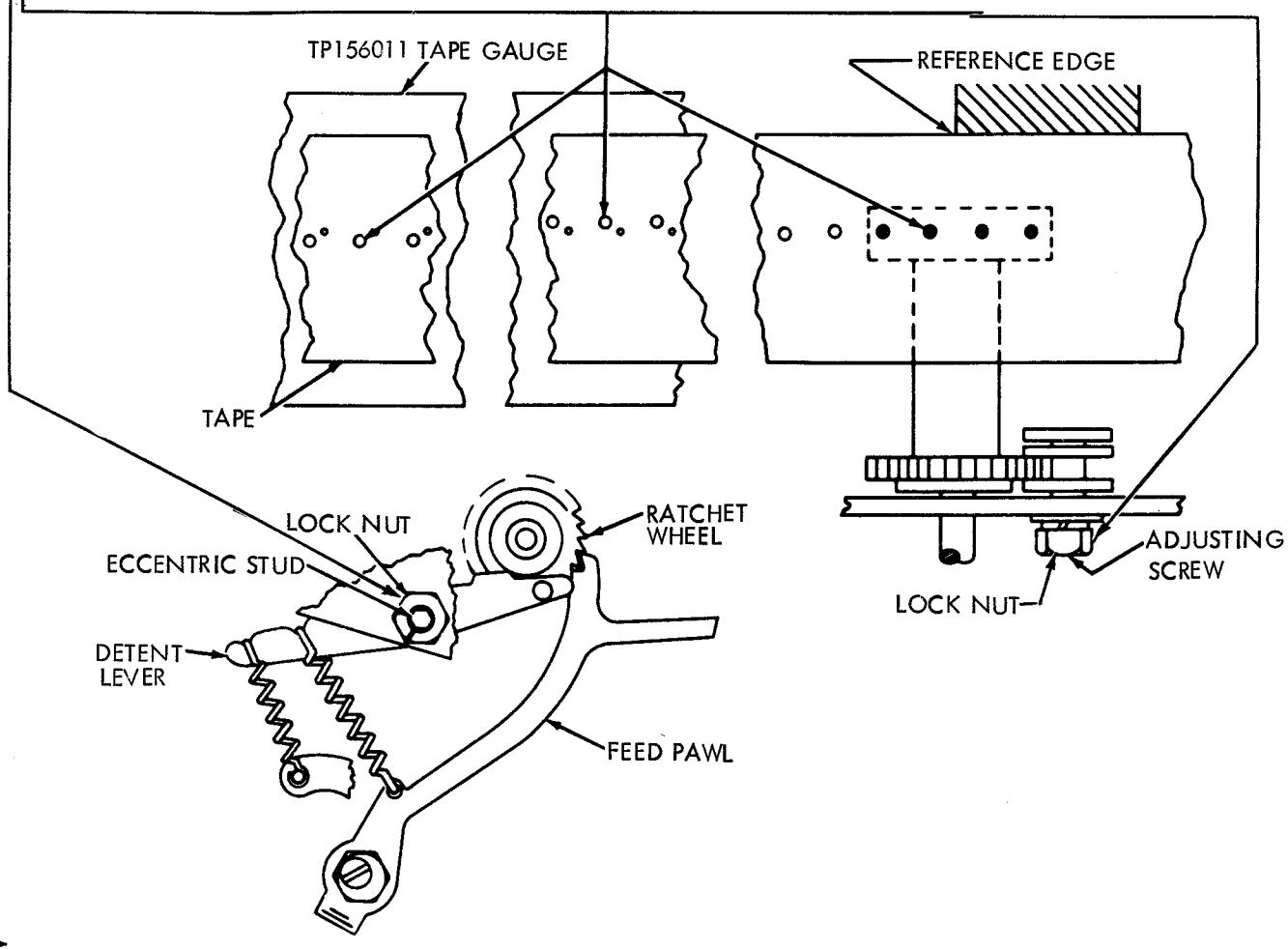

2.24 Punch Mechanism (Cont.)

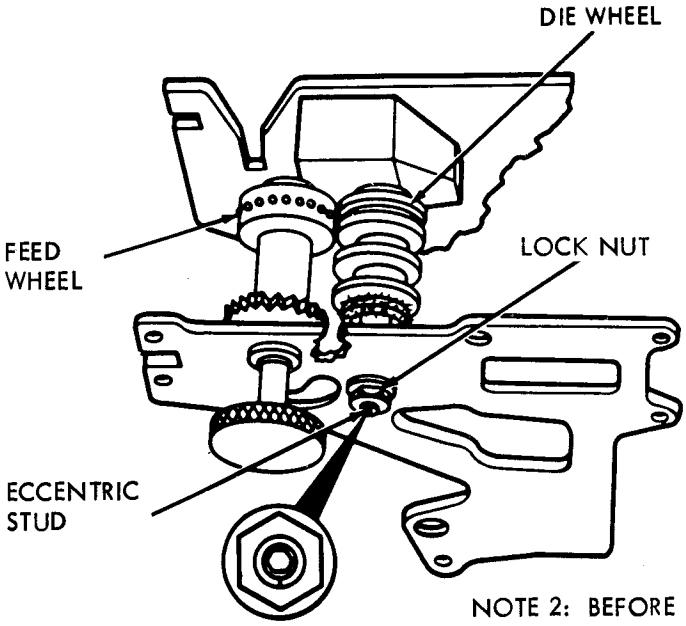

FEED HOLE SPACING----PRELIMINARY

REQUIREMENT

INDENT OF DIE WHEEL ECCENTRIC STUD POINTING DOWNWARD.

TO ADJUST

POSITION DIE WHEEL ECCENTRIC STUD WITH LOCK NUT LOOSENED.

NOTE 1: BEFORE PROCEEDING WITH THE FOLLOWING ADJUSTMENTS, CHECK BOTH TAPE GUIDE SPRING TENSIONS

FEED HOLE SPACING----FINAL

(1) REQUIREMENT

WITH TAPE SHOE BLOCKED AWAY FROM FEED WHEEL, FEED PAWL AND DETENT DISENGAGED, AND TAPE REMOVED, FEED WHEEL SHOULD ROTATE FREELY. CHECK THROUGH 3 OR 4 REVOLUTIONS OF FEED WHEEL.

NOTE 2: BEFORE PROCEEDING WITH THE FOLLOWING ADJUSTMENT CHECK BOTH TAPE GUIDE SPRING TENSIONS

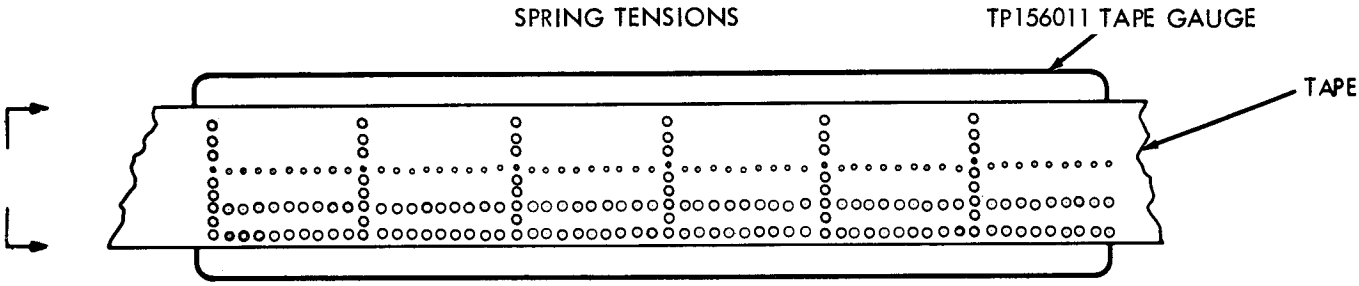

FEED HOLE SPACING

(1) REQUIREMENT

WITH A PIECE OF TAPE PERFORATED WITH SIX SERIES OF 9 SPACE CODE COMBINATIONS FOLLOWED BY A RUBOUT COMBINATION PLACED OVER THE SMOOTH SIDE OF THE TP156011 TAPE GAUGE SO THE CIRCULAR PORTION OF THE FIRST NUMBER 2 CODE HOLE IN THE TAPE IS CONCENTRIC WITH THE FIRST HOLE OF THE TAPE GAUGE. THE NEXT FOUR HOLES IN THE TAPE GAUGE SHOULD BE VISIBLE THROUGH THE NUMBER 2 CODE HOLES IN THE TAPE AND THE CIRCULAR PORTION OF THE LAST (SIXTH) NUMBER 2 CODE HOLE IN THE TAPE SHALL BE ENTIRELY WITHIN THE 0.086 DIAMETER HOLE OF THE TAPE GAUGE.

(2) REQUIREMENT

WITH TAPE SHOE HELD AWAY FROM FEED WHEEL, FEED PAWL AND DETENT DISENGAGED AND TAPE REMOVED, FEED WHEEL SHOULD ROTATE FREELY.

TO ADJUST

WITH TAPE REMOVED FROM THE PUNCH MECHANISM, LOOSEN THE ECCENTRIC LOCK NUT AND ROTATE THE DIE WHEEL ECCENTRIC SHAFT UNTIL IT BINDS AGAINST THE FEED WHEEL. BACK OFF THE ECCENTRIC UNTIL THE DIE WHEEL IS JUST FREE. KEEP THE INDENT OF THE ECCENTRIC BELOW THE HORIZONTAL CENTERLINE OF THE STUD. REFINE ADJUSTMENT FOR REQUIREMENT (1), IF NECESSARY, BY MOVING THE DIE WHEEL TOWARD THE FEED WHEEL TO DECREASE THE CHARACTER SPACING AND AWAY FROM THE FEED WHEEL TO INCREASE THE CHARACTER SPACING.

CAUTION: WITH TAPE REMOVED. MAKE SURE FEED WHEEL AND DIE WHEEL DO NOT BIND. RECHECK REQUIREMENT (1). IF NECESSARY, REFINE.

NOTE 3: FIRST THROUGH FIFTH HOLES IN GAUGE ARE SAME SIZE AS CODE HOLES IN TAPE (0.072 INCH DIAMETER). SIXTH HOLE IN GAUGE IS LARGER (0.086 INCH). THIS ARRANGEMENT ALLOWS ± 0.007 INCH VARIATION IN 5 INCHES.

2.25 Punch Mechanism (Cont.)

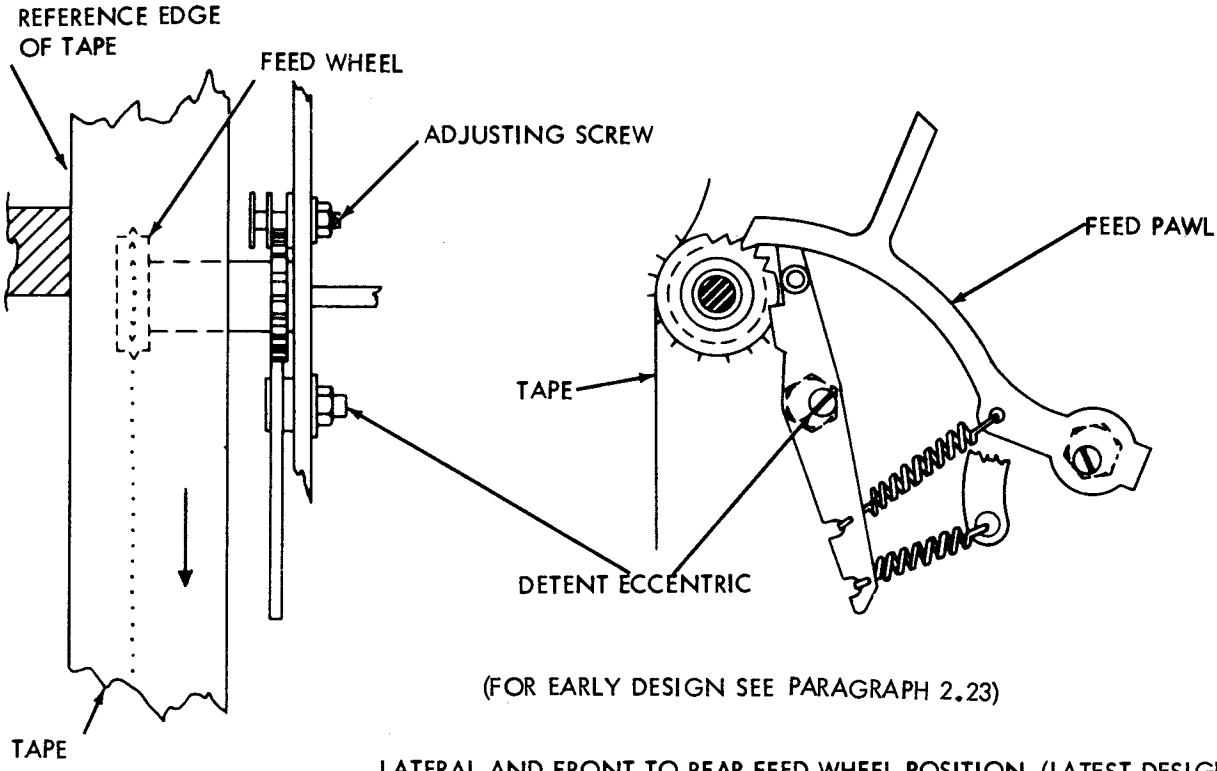

(FOR EARLY DESIGN SEE PARAGRAPH 2.23)

LATERAL AND FRONT TO REAR FEED WHEEL POSITION (LATEST DESIGN)

REQUIREMENT

THE INDENTATIONS PUNCHED BY THE FEED WHEEL SHOULD BE CENTRALLY LOCATED BETWEEN THE PUNCHED FEED HOLES (GAUGED BY EYE) AND ON SAME HORIZONTAL CENTERLINE. THE UNIT MUST BACKSPACE THE TAPE AT LEAST 30 CHARACTERS WITHOUT LOSING ITS POINT OF REGISTRATION.

TO CHECK

PERFORATE 6 INCHES OF RY TAPE. BACK SPACE 30 CHARACTERS.REPERFORATE WITH RUBOUT CHARACTERS CODE HOLES MUST COINCIDE EXCEPT FOR FIRST TWO CHARACTERS WHICH MAY BE ELONGATED ±0.010 IN

TO ADJUST (LATERALLY)

ROTATE THE DETENT ECCENTRIC CLOCKWISE TO MOVE THE FEED WHEEL PERFORATION TOWARD THE LEADING EDGE OF THE FEED HOLE AND ROTATE THE ECCENTRIC COUNTER-CLOCKWISE TO MOVE THE PERFORATION TOWARD THE TRAILING EDGE OF THE FEED HOLE. TIGHTEN THE LOCK NUT. REFINE THE FEED PAWL ADJUSTMENT IF NECESSARY.

TO ADJUST (FRONT TO REAR)

LOOSEN THE LOCK NUT ON THE ADJUSTING SCREW AND ROTATE THE SCREW COUNTER-CLOCKWISE TO MOVE THE INDENTATIONS IN THE TAPE AWAY FROM THE REFERENCE EDGE (REAR) OF THE TAPE. TO MOVE THE INDENTATIONS IN THE TAPE TOWARD THE REFERENCE EDGE OF THE TAPE, ROTATE THE ADJUSTING SCREW CLOCKWISE. REFINE THE DETENT ADJUSTMENT IF NECESSARY.

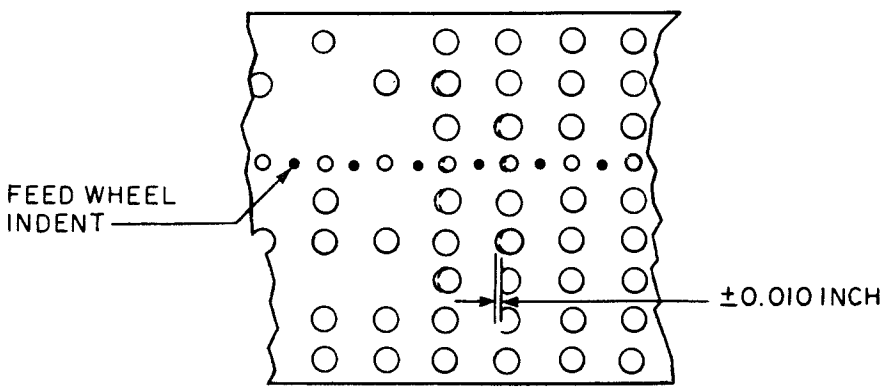

2.26 Punch Mechanism (Cont.)

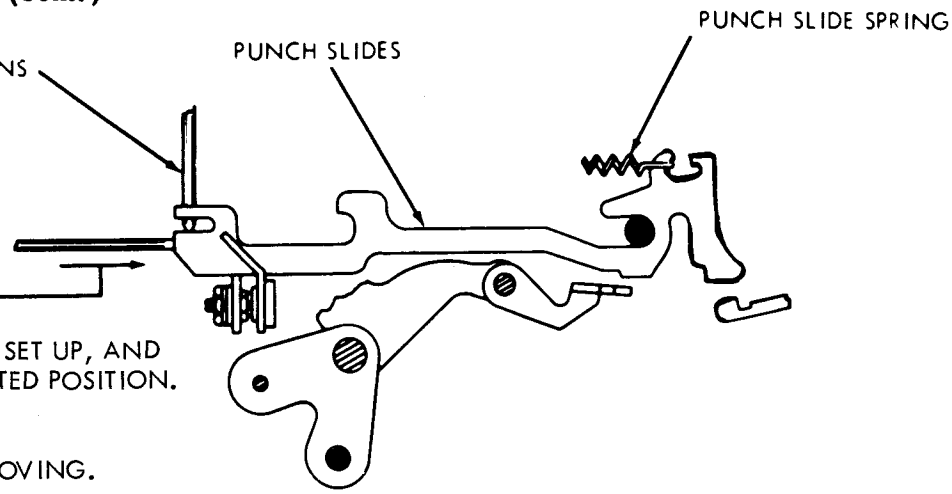

PUNCH SLIDE SPRING
REQUIREMENT
RUBOUT COMBINATION SET UP, AND PUNCH SLIDES IN SELECTED POSITION.
MIN. 2-1/4 OZS.
MAX. 3-1/4 OZS.
TO START EACH SLIDE MOVING.

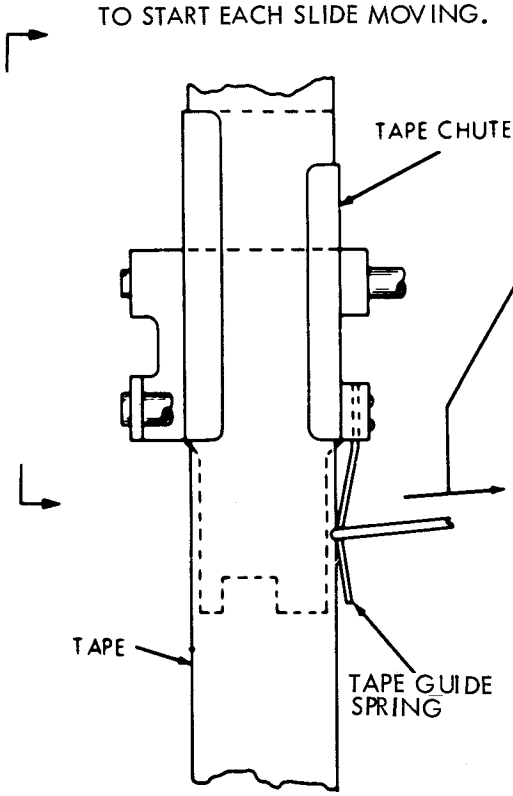

TAPE GUIDE SPRING (TAPE CHUTE)
REQUIREMENT
WITH SELECTOR AND FUNCTION CLUTCHES DISENGAGED AND LATCHED, TAPE THREADED THROUGH PUNCH MECHANISM, IT SHOULD REQUIRE
MIN. 1-1/4 OZS.
MAX. 2-1/4 OZS.
TO JUST MOVE THE SPRING AWAY FROM THE TAPE.
TO ADJUST
BEND THE SPRING.

NOTE
IT IS NECESSARY TO REMOVE SEVERAL PARTS, ON UNITS EQUIPPED WITH BACK SPACE MECHANISM, IN ORDER TO CHECK THIS SPRING TENSION. IT SHOULD NOT BE CHECKED UNLESS THERE IS GOOD REASON TO BELIEVE THAT REQUIREMENTS ARE NOT MET.

TAPE GUIDE SPRING (PUNCH BLOCK)
(1) REQUIREMENT
WITH TAPE REMOVED FROM THE PUNCH BLOCK THE TAPE GUIDE SPRING SHOULD REST AGAINST THE CLEARANCE SLOT IN THE BLOCK IN A SYMETRICAL MANNER.
(2) REQUIREMENT
WITH TAPE IN THE PUNCH BLOCK AND THE REPERFORATOR OPERATING UNDER POWER, THE SPRING SHOULD NOT DISTORT THE EDGE OF THE TAPE.
TO ADJUST
BEND THE SPRING AND POSITION IT WITH ITS MOUNTING SCREW LOOSENED.

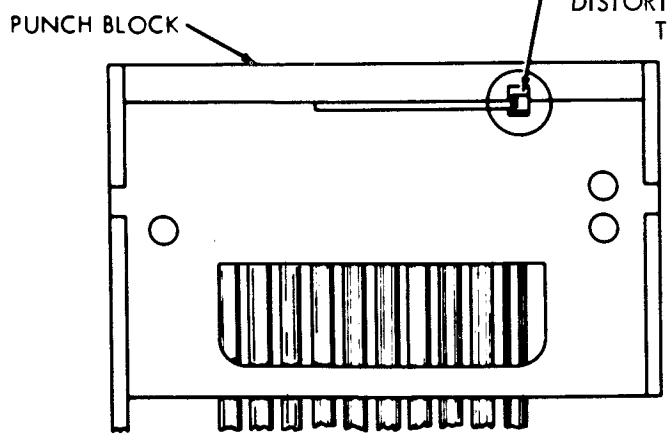

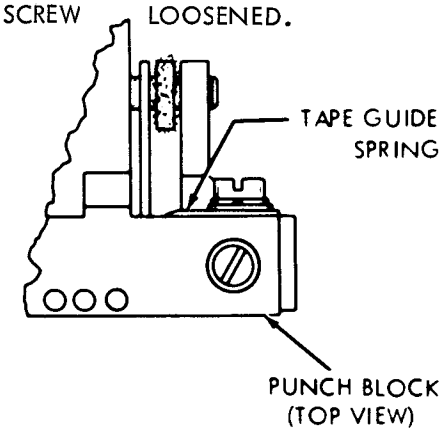

2.27 Punch Mechanism (Cont.)

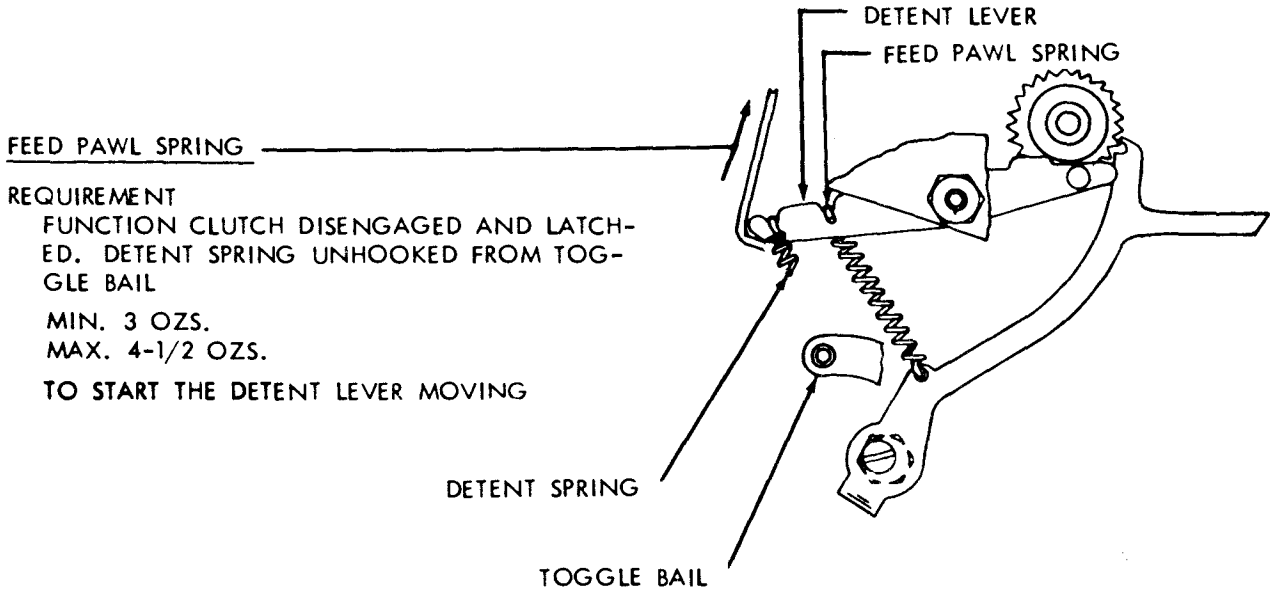

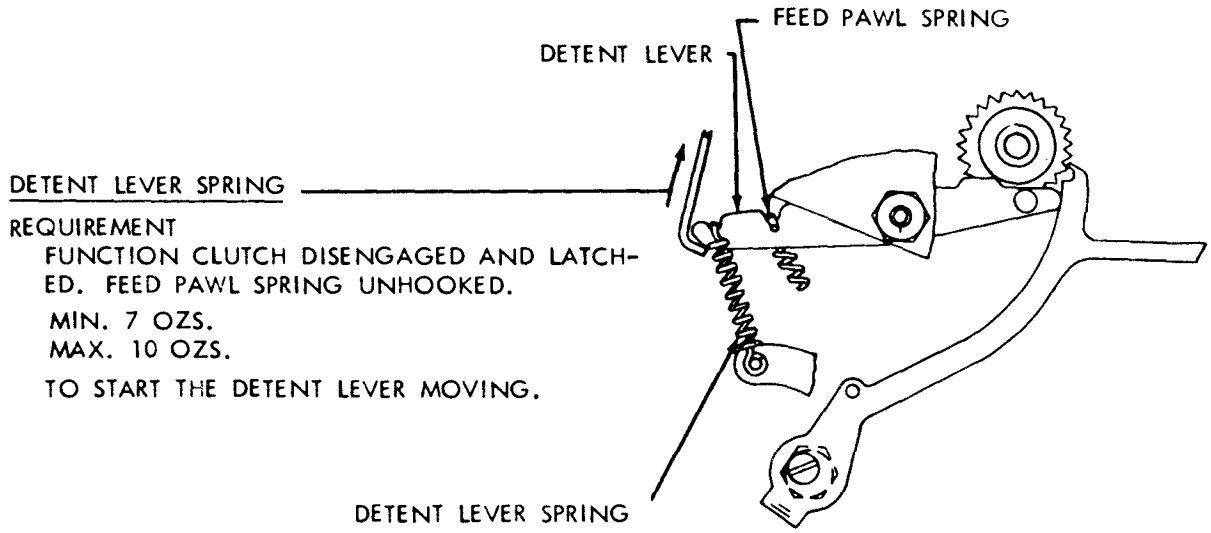

2.28 Punch Mechanism (Cont.)

TAPE GUIDE
REQUIREMENT
ROTATE FEED WHEEL UNTIL OIL HOLE IS UP. CENTER TAPE SHOE AND TAPE GUIDE, HOLD TAPE GUIDE DOWNWARD. CLEARANCE BETWEEN ADJUSTING PLATE EXTENSION AND BACKSTOP POST SHALL BE
MIN. 0.002 INCH
MAX. 0.008 INCH
TO ADJUST
LOOSEN ADJUSTING PLATE CLAMP SCREW FRICTION TIGHT AND MOVE ADJUSTING PLATE UP OR DOWN. TIGHTEN SCREW.

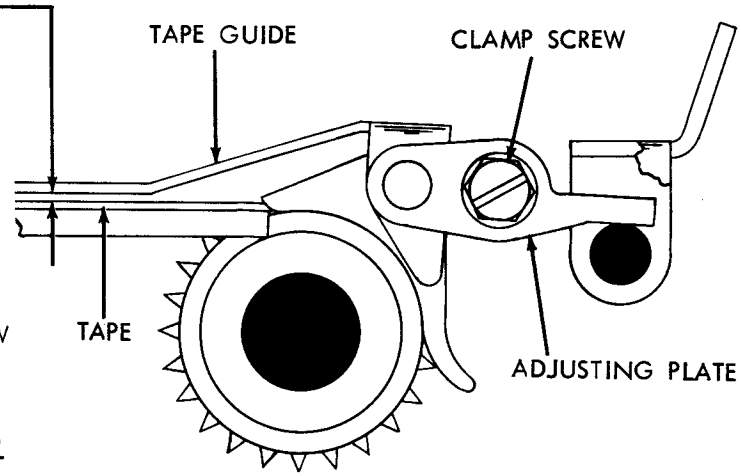

TAPE DEPRESSOR SLIDE SPRING
REQUIREMENT
ROCKER BAIL IN ITS EXTREME LEFT POSITION
MIN. 1 OZ.
MAX. 2 OZS.
TO START DEPRESSOR SLIDE MOVING

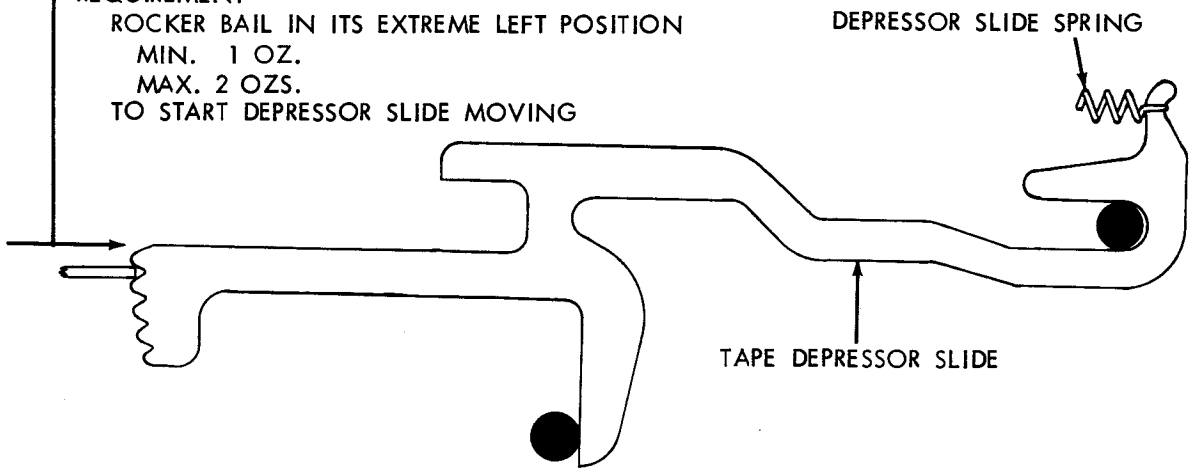

TAPE SHOE TORSION SPRING
REQUIREMENT
MIN. 13 OZS.
MAX. 18 OZS.
TO MOVE TAPE SHOE FROM FEED WHEEL.

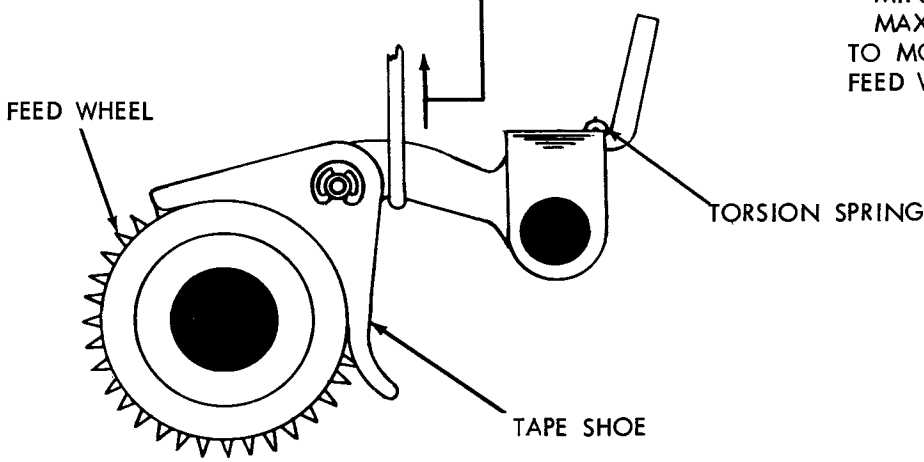

2.25 Power Drive Backspace Mechanism

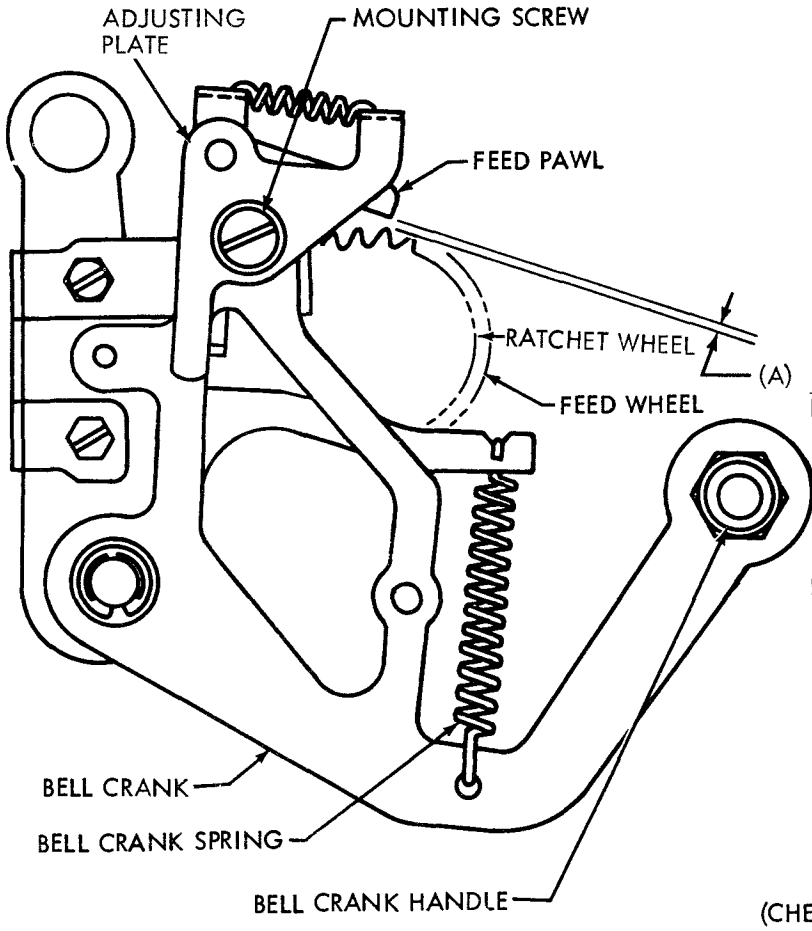

(A) FEED PAWL CLEARANCE

REQUIREMENT (PRELIMINARY)

(1) WITH BACKSPACE BELL CRANK ROTATED CLOCKWISE, BACKSPACE FEED PAWL SHOULD MISS FIRST TOOTH BY A CLEARANCE OF:
MIN. 0.006 INCH
MAX. 0.040 INCH

REQUIREMENT (FINAL)

(2) BACKSPACE FEED PAWL SHOULD MISS FIRST TOOTH AND ENGAGE SECOND TOOTH BY AT LEAST 1/2 OF RIGHT ENGAGING SURFACE OF FEED PAWL (AS GAUGED BY EYE) WHEN THE FEED PAWL FIRST CONTACTS RATCHET TOOTH.

TO ADJUST

POSITION ADJUSTING PLATE WITH MOUNTING SCREW FRICTION TIGHT.

(CHECK WITH FEED WHEEL SHAFT OIL HOLE IN THE UPPERMOST POSITION AND RECHECK EACH 90 DEGREES ABOUT PERIPHERY OF FEED WHEEL.)

(B)

FEED PAWL (PRELIMINARY WHEN POWER DRIVE IS USED)

REQUIREMENT

BACKSPACE MECHANISM IN OPERATED POSITION. FEED WHEEL RATCHET IN DETENTED POSITION. CLEARANCE BETWEEN FEED WHEEL RATCHET TOOTH AND FEED PAWL:
MIN. SOME
MAX. 0.003

TO ADJUST

BY MEANS OF 0.060" ALLEN WRENCH, ROTATE ECCENTRIC WITH NUT POST FRICTION TIGHT.

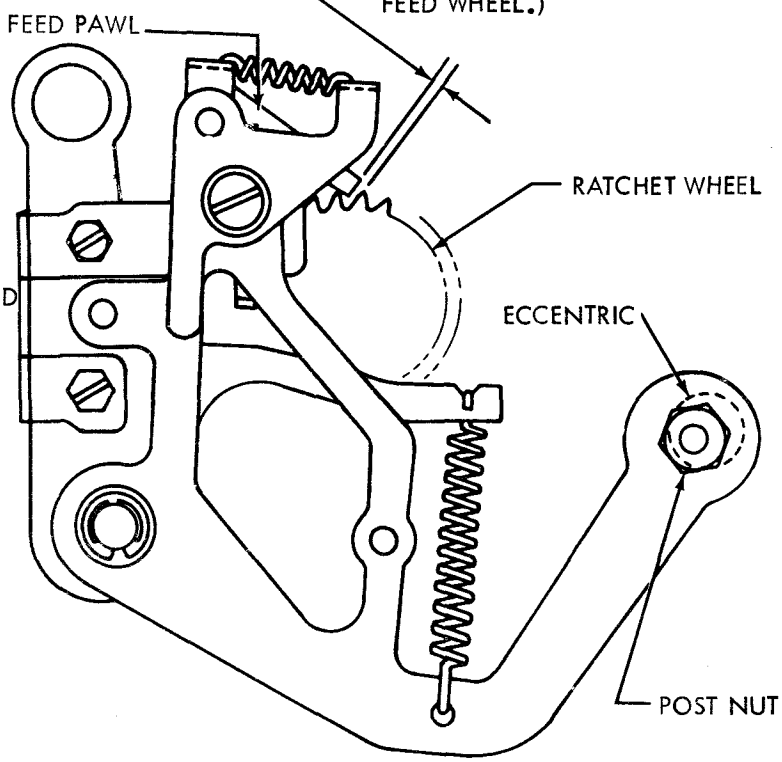

2.30 Power Drive Backspace Mechanism (Cont.)

(A) ARMATURE HINGE

REQUIREMENT

WITH ARMATURE HELD AGAINST POLE FACE (ARMATURE BAIL SPRING UNHOOKED)

MIN. SOME --- MAX. 0.004 INCH

BETWEEN ARMATURE AND MAGNET MOUNTING BRACKET WITH PLAY TAKEN UP FOR MINIMUM.

TO ADJUST

WITH MOUNTING SCREWS LOOSENED, POSITION HINGE. WHILE ADJUSTMENT IS BEING MADE, ARMATURE SHOULD TOUCH FRONT AND REAR OF POLE FACE.

NOTE

FOR "DC" OPERATION, THE BACKSPACE MAGNET ARMATURE SHALL BE POSITIONED SO THAT THE SIDE MARKED "C" SHALL FACE THE POLE FACE OF THE MAGNET CORE. FOR "AC" OPERATION, THE UNMARKED SIDE OF THE MAGNET ARMATURE SHALL FACE THE POLE OF THE MAGNET CORE.

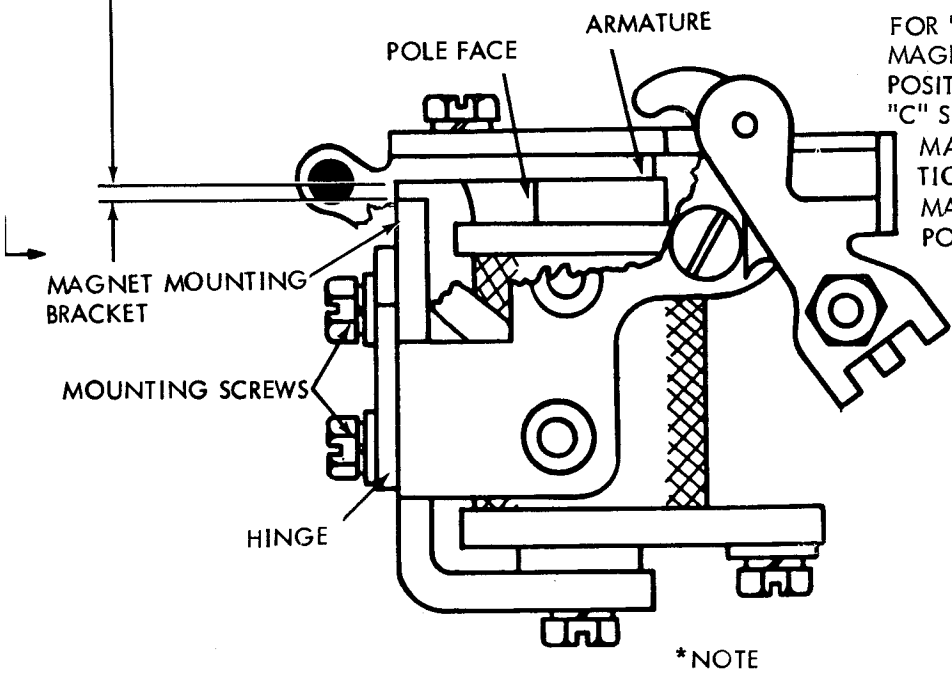

*NOTE

THIS ADJUSTMENT IS MADE AT FACTORY AND SHOULD NOT BE DISTURBED UNLESS A REASSEMBLY OF THE UNIT IS UNDERTAKEN. IF NECESSARY TO MAKE THIS ADJUSTMENT, THE PUNCH UNIT SHOULD BE REMOVED. SEE DISASSEMBLY AND REASSEMBLY. REMAKE PUNCH UNIT POSITION ADJUSTMENT.

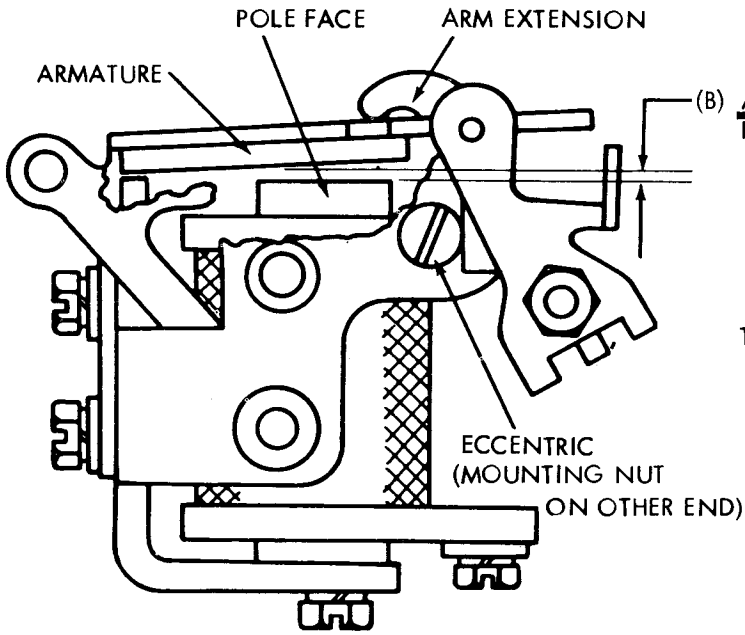

(B) ARMATURE UP-STOP*

REQUIREMENT

ARMATURE IN UNOPERATED POSITION.

GAP BETWEEN ARMATURE AND POLE FACE

MIN. 0.025 INCH.

MAX. 0.030 INCH.

AT CLOSEST POINT.

TO ADJUST

ROTATE ECCENTRIC WITH MOUNTING NUT LOOSENED. KEEP HIGH PART OF ECCENTRIC TO LEFT.

2.31 Power Drive Backspace Mechanism (Cont.)

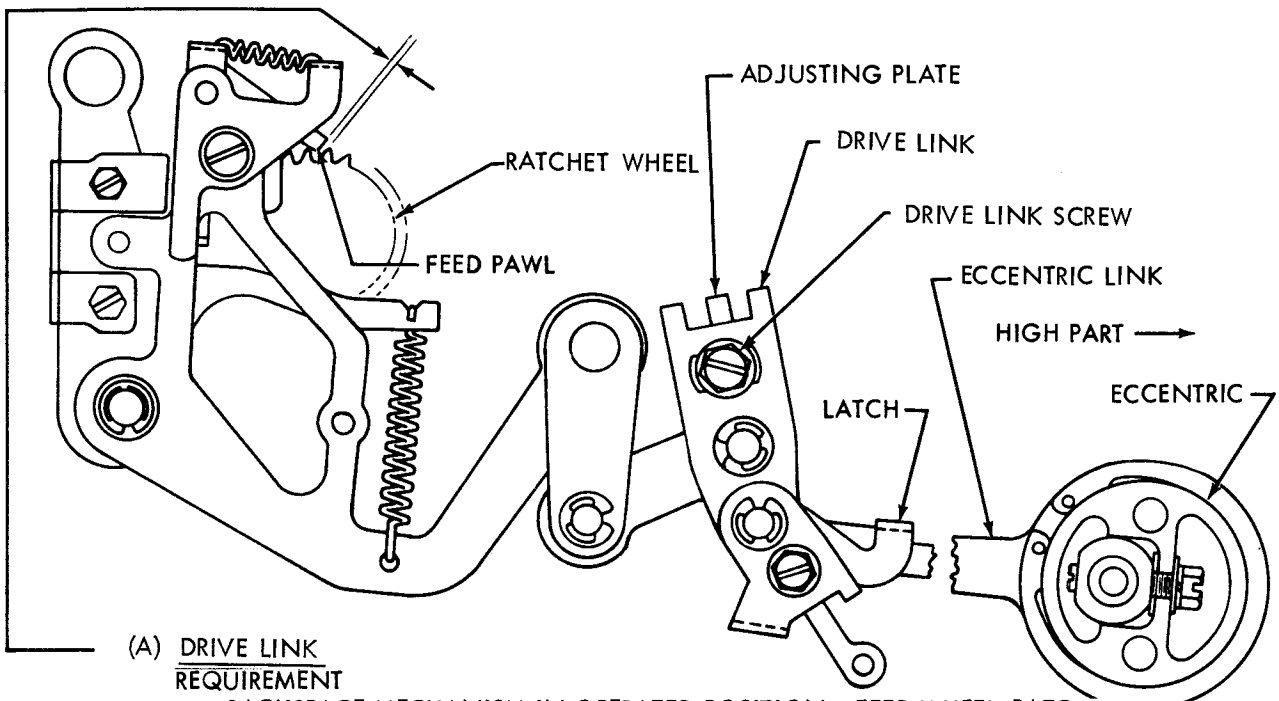

(A) DRIVE LINK

REQUIREMENT

BACKSPACE MECHANISM IN OPERATED POSITION. FEED WHEEL RATCHET IN DETENTED POSITION. LATCH ENGAGED WITH ECCENTRIC LINK. HIGH PART OF ECCENTRIC TO RIGHT. CLEARANCE BETWEEN FEED PAWL AND FEED WHEEL RATCHET TOOTH:

MIN. SOME

MAX. 0.003 INCH

TO ADJUST

BY MEANS OF PRY POINT, POSITION ADJUSTING LINK WITH DRIVE LINK SCREW FRICTION TIGHT.

2.32 Power Drive Backspace Mechanism (Cont.)

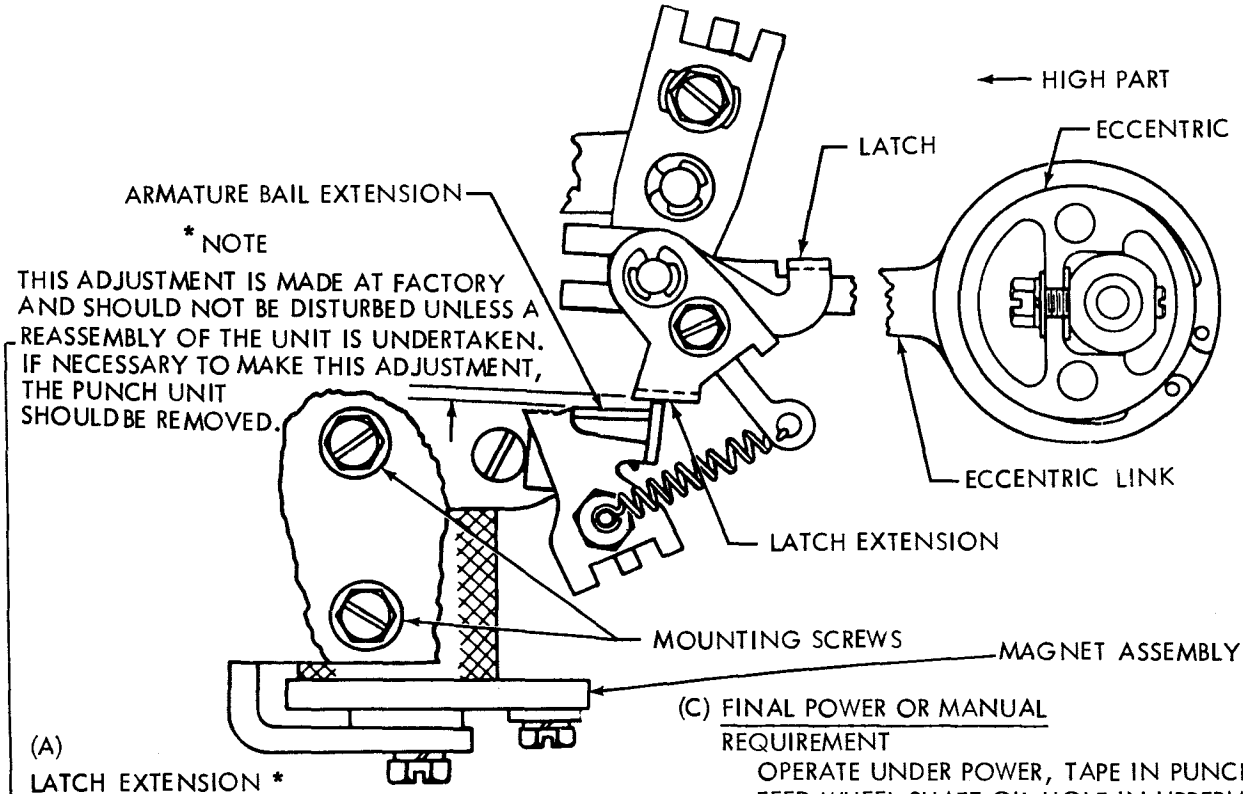

(A)

LATCH EXTENSION *

REQUIREMENT

BACKSPACE MECHANISM IN UNOPERATED POSITION. HIGH PART OF ECCENTRIC TO LEFT. ARMATURE AGAINST POLE FACE. LATCH RESTING ON ECCENTRIC ARM NOTCH. CLEARANCE BETWEEN TOP OF ARMATURE BAIL EXTENSION AND LATCH EXTENSION:

MIN. 0.005 INCH

MAX. 0.020 INCH

TO ADJUST

SWING MAGNET CLOCKWISE OR COUNTERCLOCKWISE, AS NECESSARY, WITH MOUNTING SCREWS FRICTION TIGHT.

(C) FINAL POWER OR MANUAL

REQUIREMENT

OPERATE UNDER POWER, TAPE IN PUNCH UNIT FEED WHEEL SHAFT OIL HOLE IN UPPERMOST POSITION, OPERATE BACKSPACE MECHANISM ONCE. RATCHET WHEEL SHOULD BE BACKED ONE SPACE TO FULLY DETENTED POSITION.

NOTE

A FULLY DETENTED POSITION IS DEFINED AS: "WITH DETENT ROLLER IN CONTACT WITH RATCHET WHEEL, PUNCH UNIT FEED PAWL SHOULD ENGAGE FIRST TOOTH BELOW HORIZONTAL CENTER LINE OF RATCHET FEED WHEEL WITH NO PERCEPTIBLE CLEARANCE.

TO ADJUST

REFINE FEED PAWL ADJUSTMENTS.

2.33 Power Drive Backspace Mechanism (Cont.)

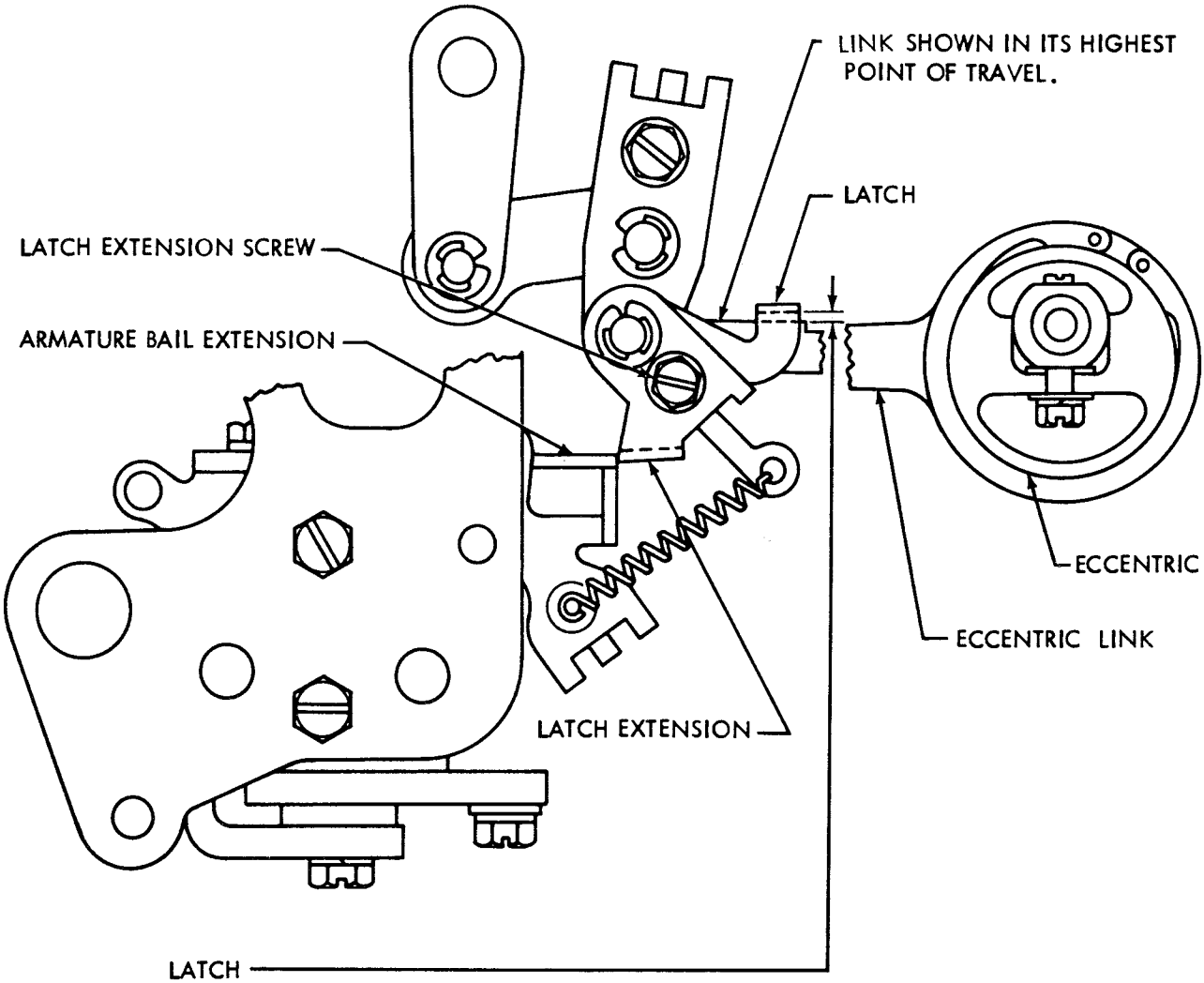

LATCH

REQUIREMENT

BACKSPACE MECHANISM IN UNOPERATED POSITION. ARMATURE OFF POLE FACE (DE-ENERGIZED). LATCH EXTENSION AGAINST END OF ARMATURE BAIL EXTENSION. ECCENTRIC LINK AT ITS CLOSEST POINT TO UNDERSIDE OF LATCH. CLEARANCE BETWEEN LATCH AND ECCENTRIC LINK:

MIN. 0.005 INCH
MAX. 0.025 INCH

TO ADJUST

POSITION LATCH WITH LATCH EXTENSION SCREW LOOSENED.

2.34 Power Drive Backspace Mechanism (Cont.)

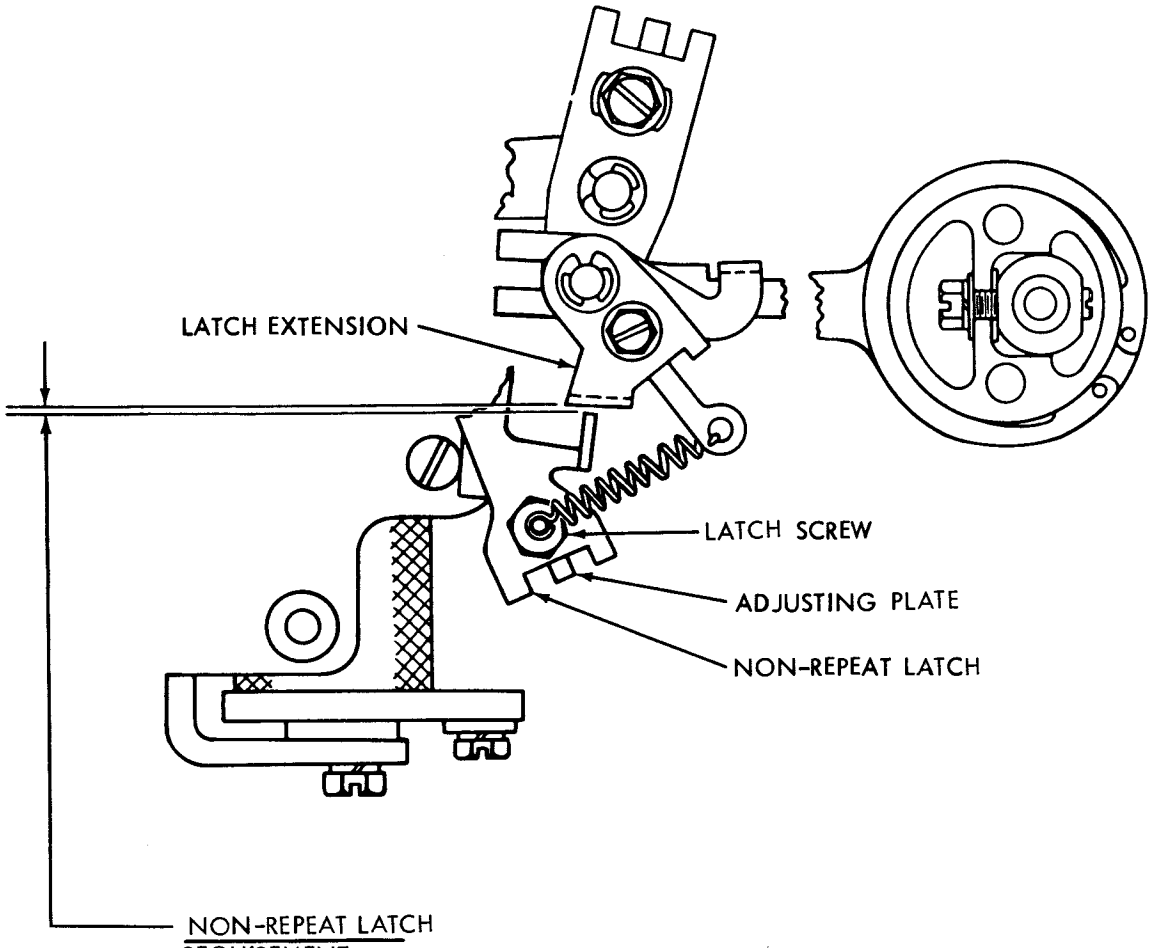

REQUIREMENT

BACKSPACE MECHANISM IN UNOPERATED POSITION. CLEARANCE BETWEEN TOP SURFACE OF NON-REPEAT LATCH AND LOWEST POINT OF LATCH EXTENSION:

MIN. 0.002 INCH

MAX. 0.010 INCH

TO ADJUST

WITH LATCH SCREW FRICTION TIGHT POSITION ADJUSTING PLATE.

2.35 Power Drive Backspace Mechanism (Cont.)

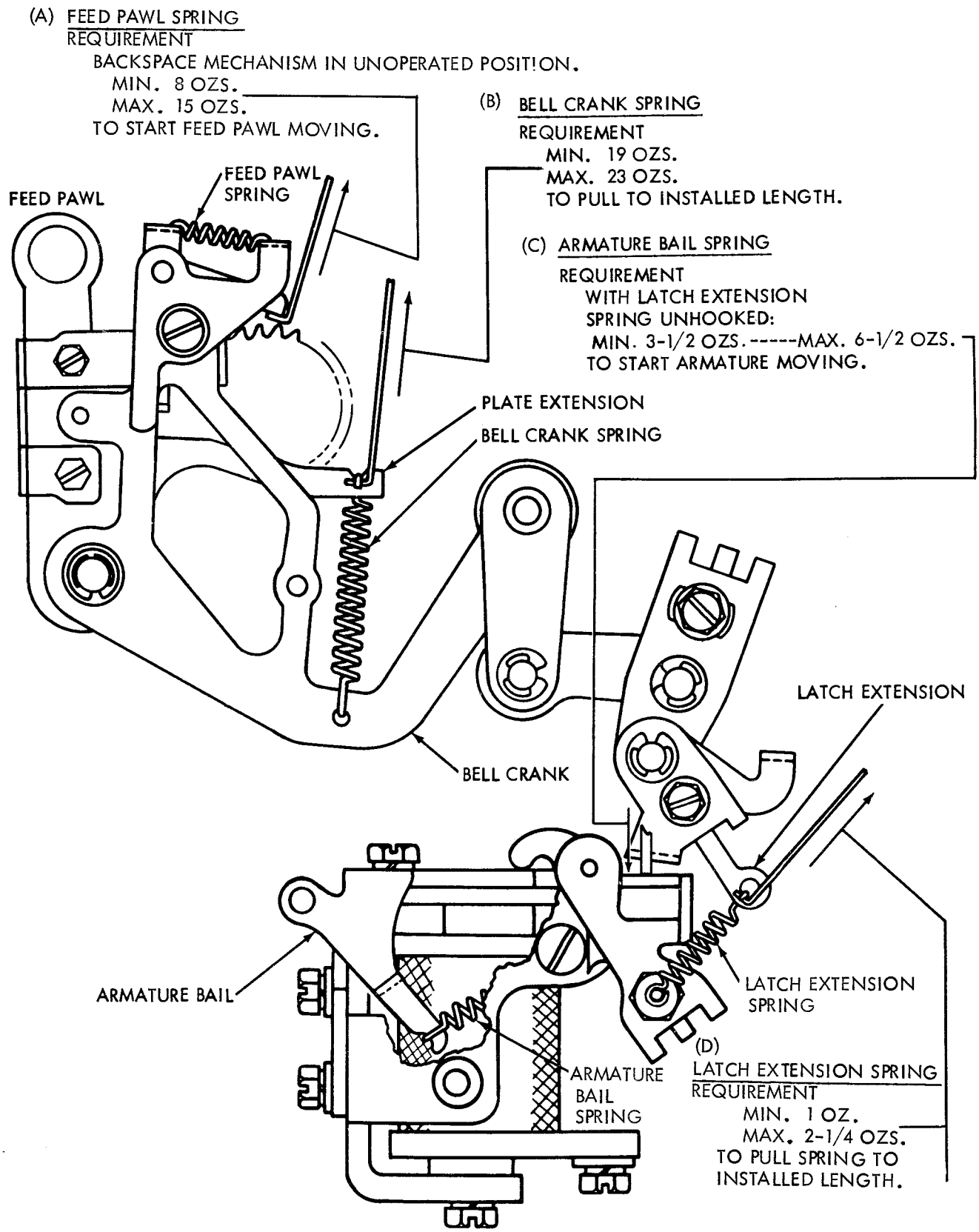

35 TRANSMITTER DISTRIBUTOR (LXD)

ADJUSTMENTS

CONTENTS PAGE

CONTENTS PAGE

CONTENTS PAGE

1. GENERAL

1.01 This section is revised to update format, add recent engineering changes, include additional information on timing contact mechanism, code reading contacts, and auxiliary contact assembly. Since this is a general revision, marginal arrows used to indicate changes have been omitted.

1.02 This section contains the requirements and adjusting procedures for the maintenance of the 35 transmitter distributor.

1.03 The adjustment of the 35 transmitter distributor is arranged in a sequence that would be followed if a complete readjustment of the unit were undertaken.

1.04 When an adjustment is completed, tighten loosened nuts or screws.

1.05 The covers may be removed for inspection and minor repair of the unit; however, when more extensive maintenance is undertaken, disconnect the unit from its power source as a safety precaution.

1.06 The adjusting illustrations indicate adjusting tolerances, positions of moving parts, spring tensions, and angle at which to apply the scale when measuring spring tensions.

1.07 If a part mounted on shims is removed, the number of shims used at each of its mounting screws should be noted so that shim pile-up may be replaced when part is remounted.

1.08 If parts or assemblies are removed for readjustment and subsequently replaced, recheck any adjustment that may have been affected by removal of these parts or assemblies.

1.09 The spring tensions given in this section are indications (not exact values) and should be checked with proper spring scales in the position indicated. Replace springs which do not meet the requirements and for which no adjusting procedure is given.

1.10 References made to left or right, up or down, front or rear, etc, apply to the unit in its normal operating position as viewed from the operator's position.

1.11 Where reference is made to a letters combination, select the rubout code. If reference is made to a blanks combination, select the space code.

1.12 When a requirement calls for the clutch to be disengaged, the clutch shoe lever must be fully latched between its trip lever and latchlever so that the clutch shoes release their tension on the clutch drum. To accomplish this, rotate the main shaft by hand until the clutch reaches its stop position, then apply a screwdriver to the cam disc stop-lug and push the disc in its normal direction of shaft rotation until the latchlever seats in its notch in the disc.

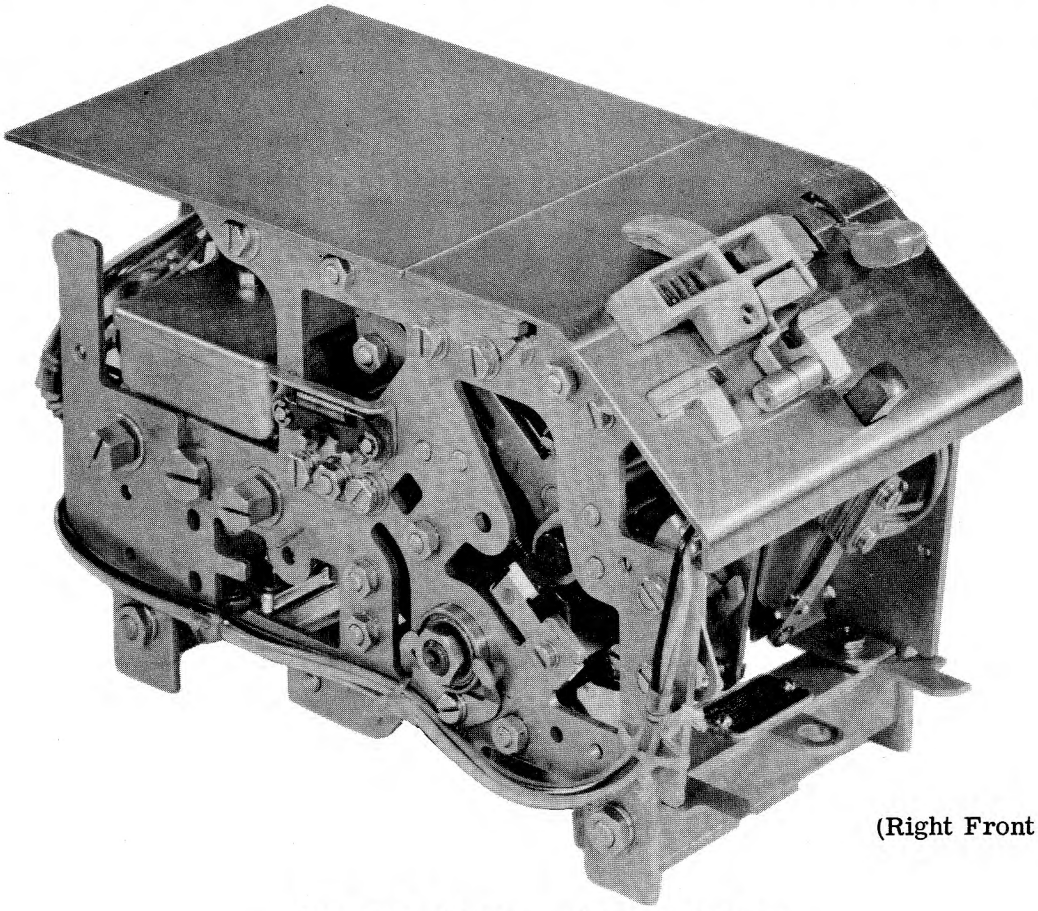

(Right Front View)

Figure 1 - 35 Transmitter Distributor

2. ADJUSTMENTS

2.01 Cover Assemblies

(A) REMOVING FRONT PANEL

Pull outward on lower right and left rear corner of front panel and slide panel toward the front. Replace in reverse order.

(B) REMOVING COVERPLATE

Lift left end of coverplate to disengage detents then slide plate toward the left to disengage spring plate. Replace in reverse order.

(C) REMOVING TOP PLATE

With front and rear mounting screws loosened (do not disturb mounting nuts) and tape lid raised, lift plate upward. Refer to 2.04 when replacing the plate.

(D) REMOVING TAPE GUIDEPLATE

With front and rear mounting screws loosened (do not disturb mounting nuts) and tape lid raised, lift plate upward. Refer to 2.05 when replacing the plate.

(E) REMOVING TRANSMITTER DISTRIBUTOR ASSEMBLY

Remove right and left mounting screws attached to base and lift assembly upward to disengage main shaft gear. Transmitter is equipped with plug that mates with connector in base. After unit is plugged in, insert mounting screws (3). Check alignment of main shaft gear with driving gear.

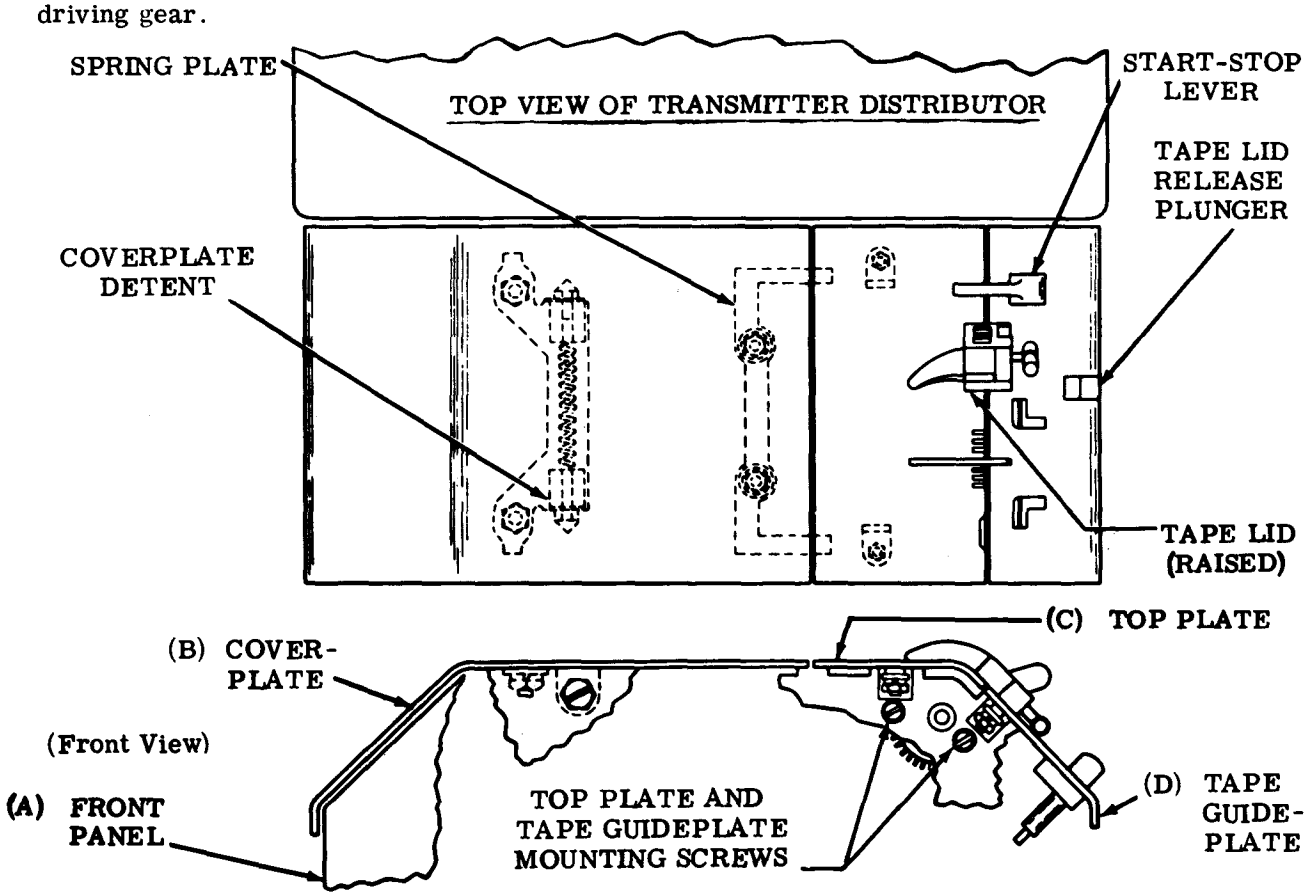

2.02 Clutch Mechanism

Note 1: Requirements (A) and (B) are adjusted at the factory and should not be disturbed unless associated mechanisms have been removed for servicing or there is reason to believe that the requirements are not met.

Note 2: Remove transmitter distributor from its base prior to adjustment. See 2.01 (E).

CLUTCH SHOE LEVER SPRING

Requirement
With clutch engaged, hold cam disc to prevent turning.
Min 15 oz---Max 20 oz
to move shoe lever in contact with stop-lug.

To Measure
Invert unit. Rotate main shaft until clutch shoe lever and stop-lug are up.

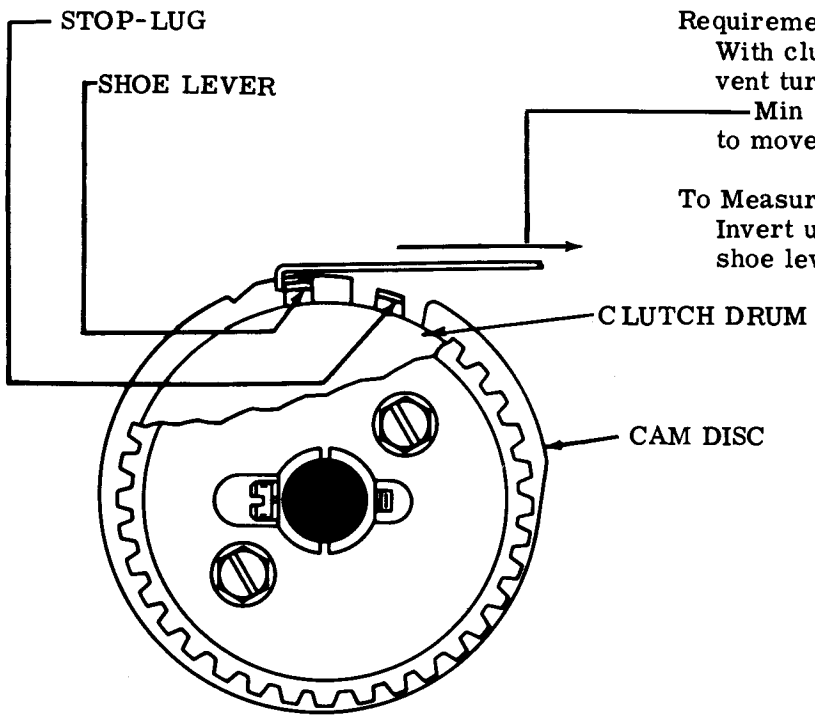

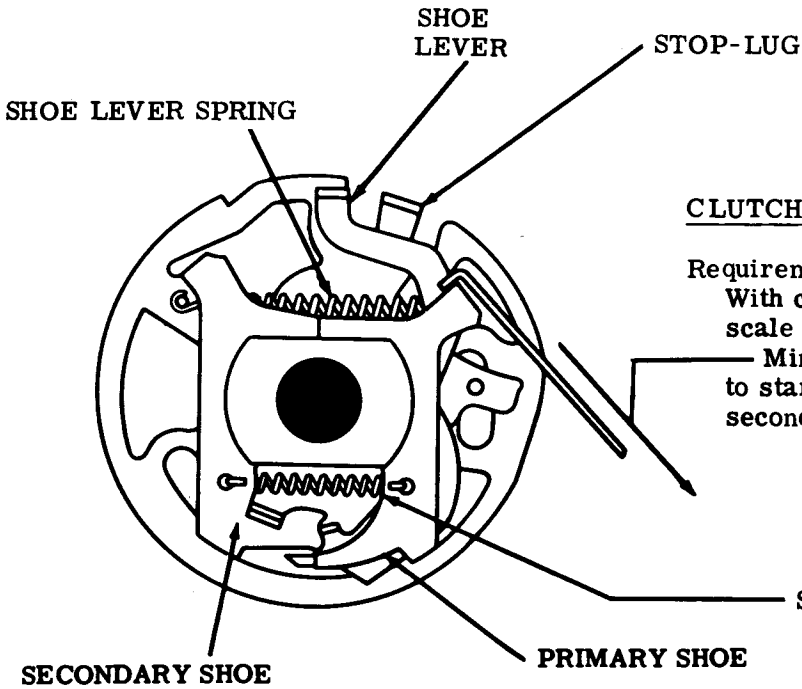

CLUTCH SHOE SPRING

Requirement
With clutch drum removed, hook spring scale as shown
Min 3 oz---Max 5 oz
to start primary shoe moving away from secondary shoe at point of contact.

2.03 Clutch Trip Mechanism

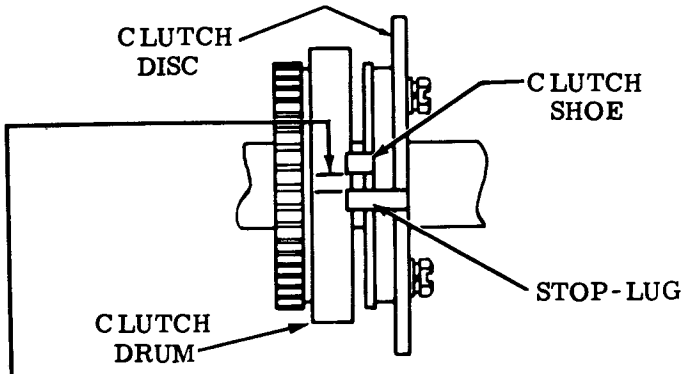

Note: Remove transmitter distributor from its base prior to adjustment. See 2.01 (E).

(C) CLUTCH LATCHLEVER SPRING

Requirement
Clutch engaged and rotated until latch-lever is on low part of disc
Min 3 oz---Max 5-1/2 oz
to start latch moving.

(D) CLUTCH TRIP LEVER SPRING

Requirement
With clutch engaged
Min 7 oz---Max 10-1/2oz
to start clutch trip lever moving.

(B) CLUTCH SHOE LEVER

Requirement
Clearance as shown should be
Min 0.055 inch---Max 0.085 inch
greater with clutch engaged* than with clutch disengaged.
* (Pull shoe lever with force of 32 oz and release slowly to engage clutch shoes.)

To Adjust
With clutch disc clampscrews loosened, place wrench over stop-lug and move disc.

CAUTION: MAKE SURE THAT DRUM DOES NOT DRAG ON SHOES WHEN CLUTCH IS DISENGAGED AND DRUM IS ROTATED IN ITS NORMAL DIRECTION. REFINE ABOVE ADJUSTMENT TO CORRECT SHOE DRAG.

(A) CLUTCH TRIP LEVER

(1) Requirement
(Remove coverplate, 2.01).
With clutch disc stop-lug opposite clutch trip lever, clearance between inner surface of lug and lever, play taken up to make clearance maximum
Min 0.012 inch---Max 0.025 inch

To Adjust
Loosen clamp nut on clutch trip bail eccentric (friction tight) and rotate eccentric to its lowest point. Position eccentric to meet requirement.

(2) Requirement
Play taken up to make clearance minimum
Some clearance

To Adjust
Refine (1) Requirement.

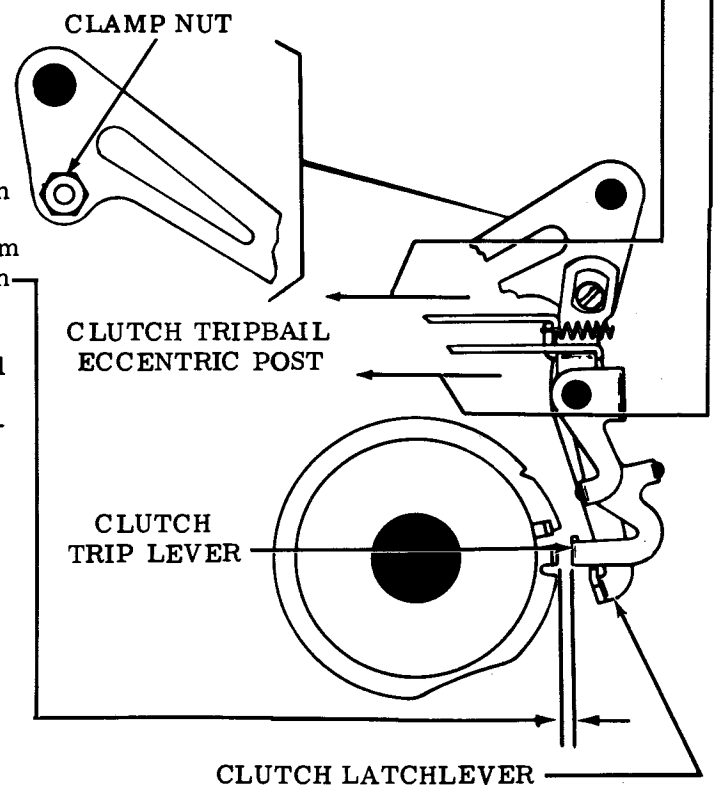

2.04 Tape Guideplate

(A) TAPE LID

Note 1: Remove top and tape guideplates, lubricate prior to adjustment.

(1) Requirement (Preliminary)

With tape lid held against notch in top guideplate

(a) Feed wheel groove in tape lid should align with slot in plate.

(b) Hole in tape lid for tape-out pin should align with hole in plate. (Gauge by eye.)

(c) Clearance between pivot shoulder and tape lid
Min some---Max 0.010 inch

To Adjust

With tape lid bracket mounting nuts (2) loosened, insert tip of TP170283 gauge through slot and into groove of lid; position tape lid bracket. Retighten nuts.

(2) Requirement

Tape lid front bearing surface, A, should touch tape guideplate. Clearance, B, measured at fin of tape lid which is in line with rear tape guide. (See Note 3.)

Min 0.010 inch---Max 0.018 inch For fixed width tape guides
Min 0.015 inch---Max 0.018 inch For variable width tape guides

Note 2: When both plates are assembled on unit, left edge of lid may touch top plate and some change in this clearance may be expected.

To Adjust

With tape lid bearing bracket mounting screws friction tight and tape lid pressed against tape guideplate, position bearing bracket. Recheck (1) Requirement.

(3) Requirement

Release button should have some endplay when lid is latched against tape guideplate.

To Adjust

With eccentric mounting post locknut friction tight and tape lid raised, rotate high part of eccentric toward tape guideplate. Close lid and rotate eccentric toward bracket until latch just falls under flat on post. Recheck by depressing button. With lid held down, tip of latch should clear post as button is operated.

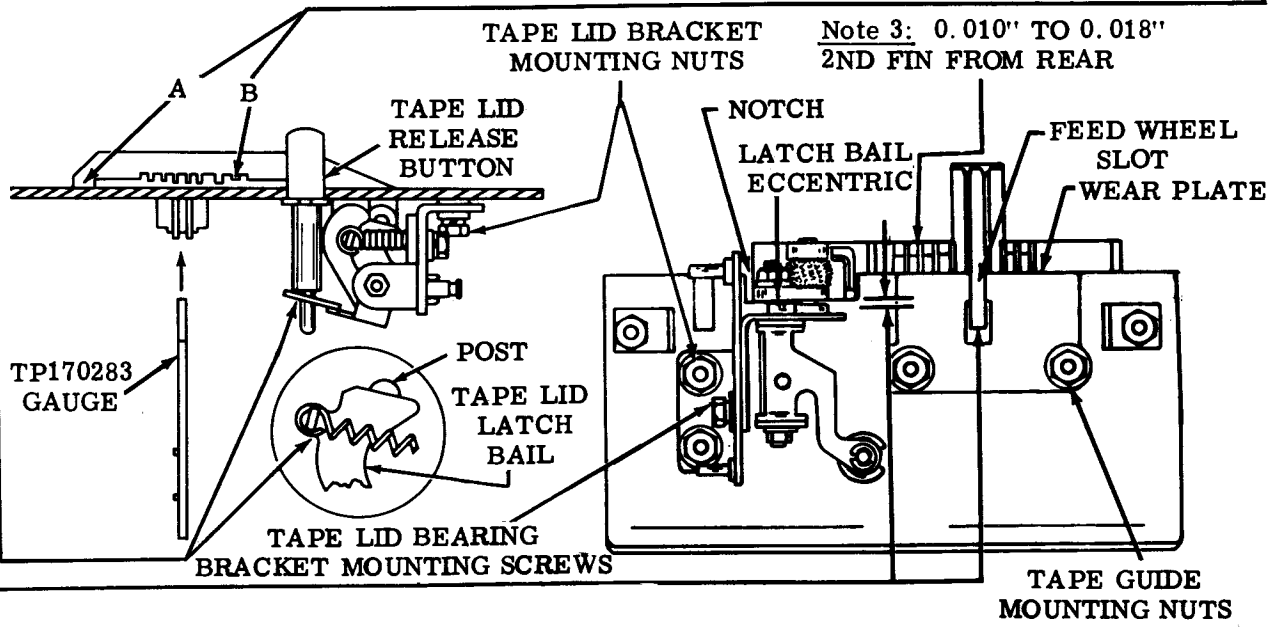

2.05 Tape Guideplate (continued)

(B) TAPE GUIDE

(1) Requirement
With tape gauge positioned as shown, clearance between right and left tape guide and gauge
Min some---Max 0.003 inch

(2) Requirement
Edge of wear plate should be flush with edge of tape guideplate.

To Adjust
With each tape guide mounting nut friction tight, move wear plate upward until it overhangs edge of tape guideplate. Place gauge in position and move gauge and wear plate downward until both studs engage edge of tape guideplate to align common edge. Hold gauge and wear plate and position each guide. (Gauge may touch but not bind.) The tape should not ride on the side of either tape guide.

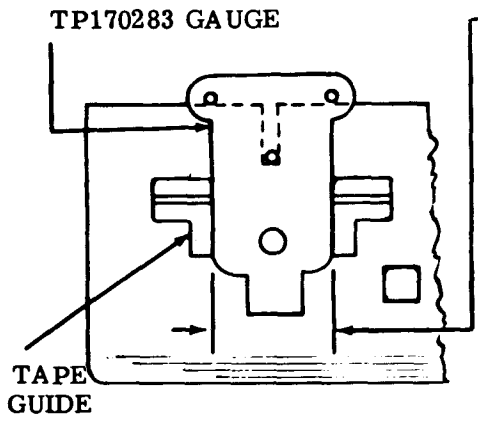

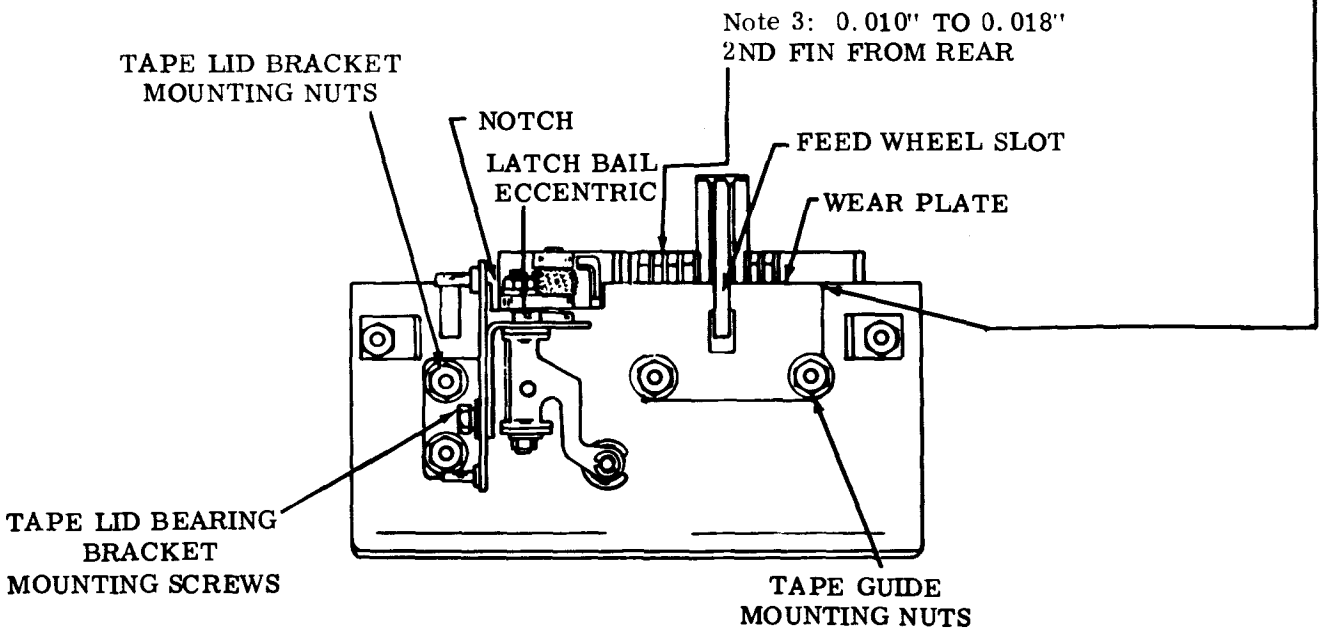

2.06 Tape Guide Mounting Plate

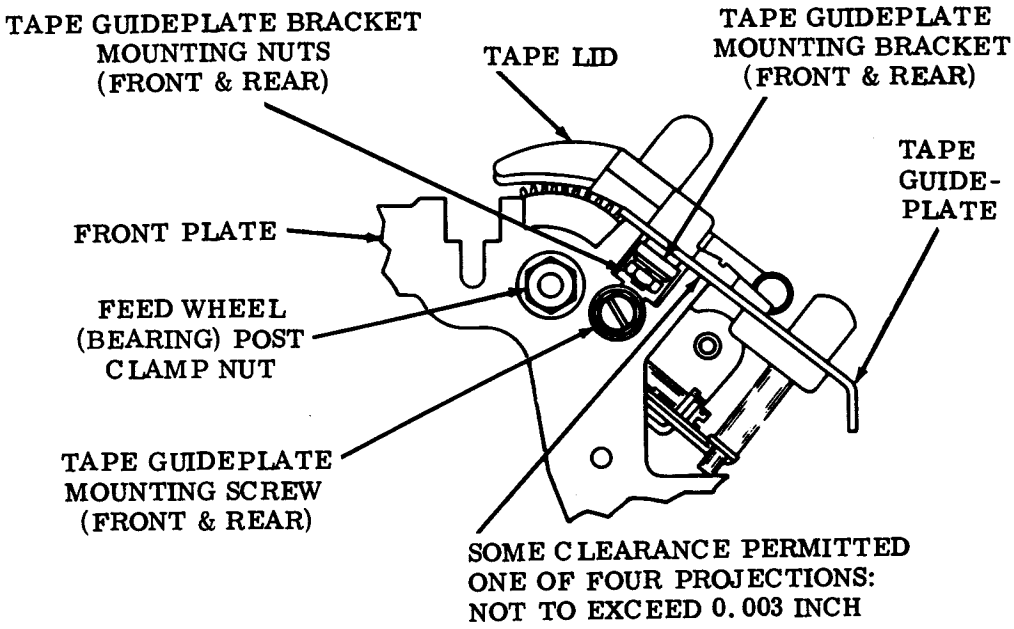

REPLACING AND POSITIONING TAPE GUIDEPLATE

Note: Position tape-out sensing pin stop arm (2.10) in its lowest position and hold start stop bail extension from ratchet wheel.

(1) Requirement
Shoulder of feed wheel post should not interfere with top plate or tape guideplate mounting brackets.

To Adjust
See Note. With feed wheel bearing post clamp nut friction tight, position the post.

(2) Requirement
Tape guideplate should rest firmly against at least three projections of front and rear plate.

To Adjust
See Note. With clamp nut that secures tape guideplate mounting bracket (front and rear) friction tight, trip clutch, and rotate shaft until sensing pins are in their uppermost position. With tape lid raised and start-stop lever in run position, press guideplate into position while guiding mounting screws into notch of front and rear plate. Engage tip of tape-out pin with hole in tape guideplate.

(3) Requirement
Outer edge of front and rear mounting bracket should be located flush with shoulder of mounting stud so that edge of tape guideplate projects over front and rear plate by an equal amount. Gauge by eye. See 2.19.

To Adjust
Move tape guideplate toward the front or rear. Tighten nuts only after top plate (2.07) is adjusted.

2.07 Top Plate and Coverplate Mounting

REPLACING AND POSITIONING TOP PLATE

To Check

Loosen nuts (friction tight) that secure mounting screws to plate. Press top plate into position while guiding top plate mounting screws into notch of front and rear plate. Position each sensing pin in its slot. Make sure that top plate seats firmly against projections of front and rear plate (3 projections should engage) and tight-tape arm extension is under top plate.

(1) Requirement

Mating edge of top plate should be flush to 0.003 under flush with edge of tape guideplate (within area of tape lid) when plate engages at least 5 projections.

To Adjust

Position top plate, tighten mounting screws, and then tighten nuts that secure tape guideplate mounting brackets (2.06).

(2) Requirement

Feed wheel slot should align with slot in tape guideplate so that feed wheel rotates freely with detents and feed pawl disengaged (freewheeling).

To Adjust

Position top plate toward front or rear to align slot.

(3) Requirement

Clearance between projection of tape lid and top plate (tape lid latched)

Min 0.010 inch---Max 0.020 inch at curved portion } For fixed width tape guides
Min 0.010 inch---Max 0.018 inch at flat portion } For fixed width tape guides
Min 0.015 inch---Max 0.018 inch at flat portion For variable width tape guides

To Adjust

If necessary, loosen tape lid bearing bracket mounting screw (2.04) and position tape lid. Retighten screws and recheck requirements in 2.04.

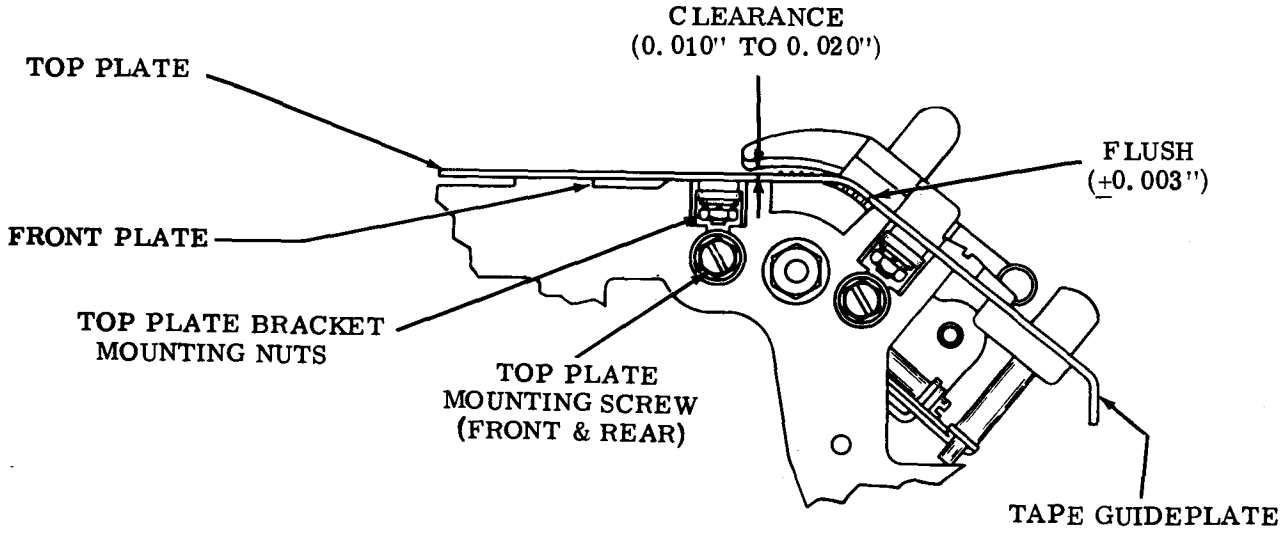

2.08 Top Plate and Coverplate Mounting (continued)

REPLACING AND POSITIONING COVERPLATE

(1) Requirement
Right edge of coverplate should be held flush against left edge of top plate by the coverplate detents.

(2) Requirement
Coverplate should rest against at least three of the four projections (front and rear plate).

(3) Requirement
Front edge of coverplate and top plate should align.

To Adjust
With detenting nut clampscrew (front and rear plate) friction tight, move clampscrews to their extreme lower right position then tighten screws. Loosen detent bracket and spring plate mounting nuts. Place cover on unit and position horizontally to meet the requirements. Retighten mounting nuts.

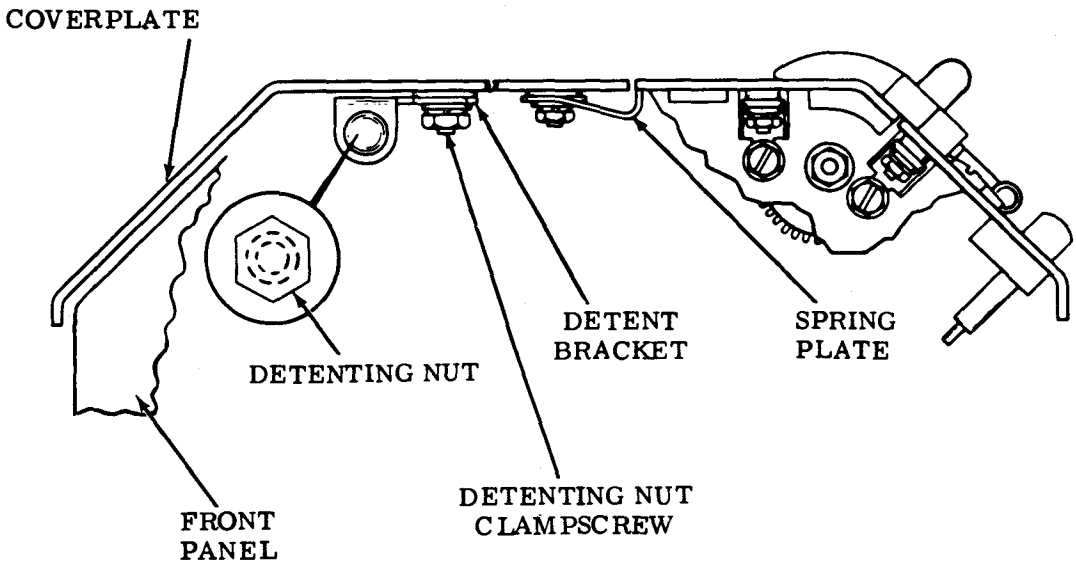

2.09 Tape-Out Contact Mechanism

TAPE-OUT CONTACT ASSEMBLY

(1) Requirement

Coverplate and top plate removed; start-stop switch in stop position; removal of tape guideplate optional. With tape-out spring bracket friction tight, move bracket downward until tape-out pin extension clears insulated portion of contact swinger. With gram scale applied as shown

Min 8 grams---Max 15 grams

to separate normally closed contacts.

To Adjust

Remove bail spring and contact assembly. Form the contact swinger with the TP110445 spring bender.

(2) Requirement

Clearance between normally closed contacts

Min 0.008 inch---Max 0.015 inch

To Adjust

Form upper contact spring using the TP110445 spring bender.

Note: Replace contact assembly with swinger over tape-out pin extension. Place spring bracket shoulder bushing on upper hole and the washer on lower mounting hole.

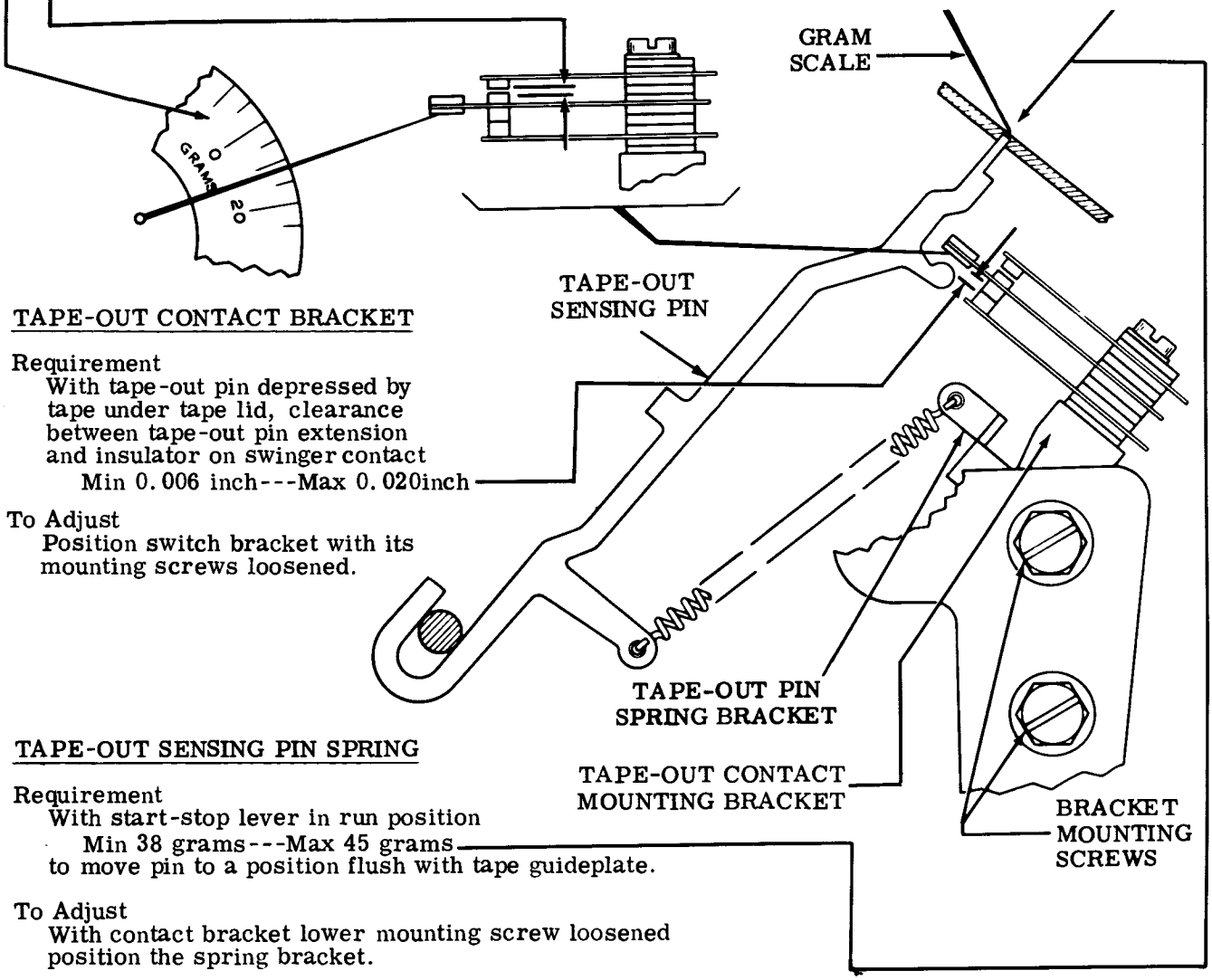

TAPE-OUT CONTACT BRACKET

Requirement

With tape-out pin depressed by tape under tape lid, clearance between tape-out pin extension and insulator on swinger contact

Min 0.006 inch---Max 0.020inch

To Adjust

Position switch bracket with its mounting screws loosened.

TAPE-OUT SENSING PIN SPRING

Requirement

With start-stop lever in run position

Min 38 grams---Max 45 grams

to move pin to a position flush with tape guideplate.

To Adjust

With contact bracket lower mounting screw loosened position the spring bracket.

2.10 Tape-Out Sensing Pin Mechanism

TAPE-OUT SENSING PIN

(1) Requirement
With start-stop lever in free wheeling or stop position, tip of tape-out pin should be flush to 0.010 inch under flush below top surface of tape guideplate.

To Adjust
Place start-stop lever in stop position. With stop arm clampscrew friction tight, position the stop arm.

(2) Requirement
With start-stop lever in run position, clearance as shown should be at least 0.055 inch.

To Adjust
Place start-stop lever in run position and loosen tape-out bail clampscrew. Position extension arm with tommy wrench or similar tool. Recheck (1) Requirement.

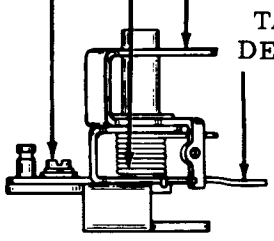

DEPRESSOR BAIL TORSION SPRING

Requirement
Tape-out bail spring unhooked. Start-stop lever in stop position
Min 2-3/4 oz---Max 5-1/2 oz
to start intermediate tape-out bail moving away from tape-out pin depressor bail.

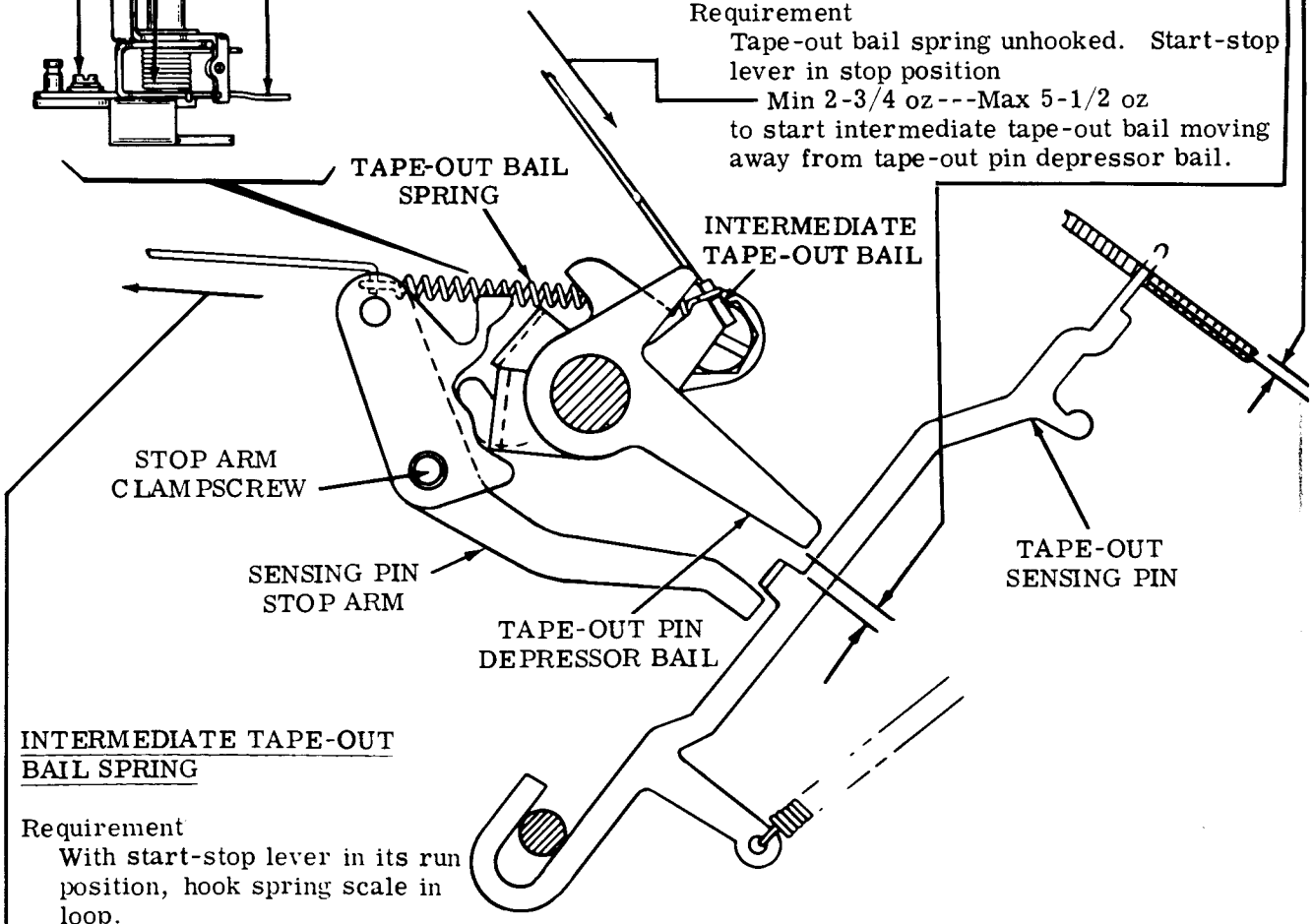

INTERMEDIATE TAPE-OUT BAIL SPRING

Requirement
With start-stop lever in its run position, hook spring scale in loop.
Min 3 oz---Max 5 oz
to pull spring to its installed length.

2.11 Start-Stop Switch Assembly

(A) START-STOP SWITCH BRACKET

(1) Requirement
With start-stop lever in run position and clutch in its disengaged position, clearance between start-stop bail extension and insulator on start-stop switch swinger
Min 0.006 inch---Max 0.015 inch

To Adjust
With switch bracket mounting screws loosened, position the bracket.

(2) Requirement
Start-stop bail extension should fully engage insulated portion of switch swinger.

To Adjust
Loosen contact pile-up mounting screws and align contact assembly.

(B) TIGHT-TAPE START-STOP CONTACT SPRING

Requirement
With start-stop lever in run position
Min 3 oz---Max 4 oz
to separate contacts.

To Adjust
Form swinger with TP110445 spring bender.

Note: Recheck Adjustments (A) and (C).

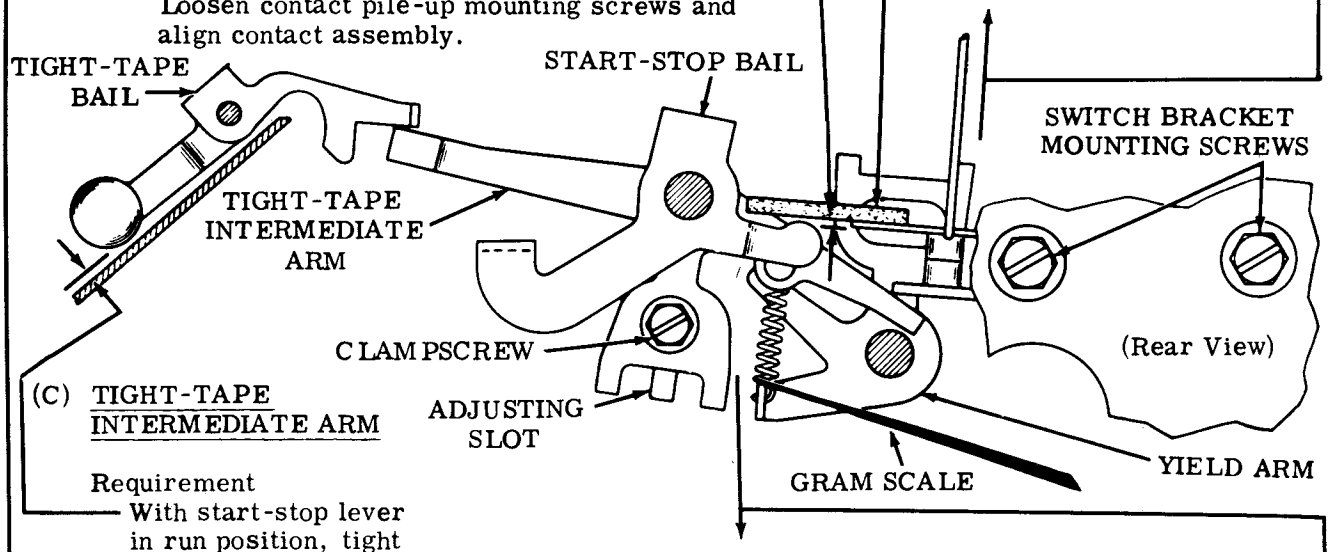

(C) TIGHT-TAPE INTERMEDIATE ARM

Requirement
With start-stop lever in run position, tight tape start-stop contacts should function as follows:

(a) Remain closed when tight tape bail is raised 0.045 inch.

(b) Open as bail is raised to height of 0.075 inch.

To Adjust
With tight-tape intermediate arm clamp-screw loosened, position the arm at its adjusting slot.

(D) TIGHT-TAPE INTERMEDIATE ARM SPRING

Requirement
With start-stop lever in run position,
Min 20 grams (3/4 oz)---Max 40 grams (1-1/2 oz)
to start intermediate arm moving away from its yield arm.

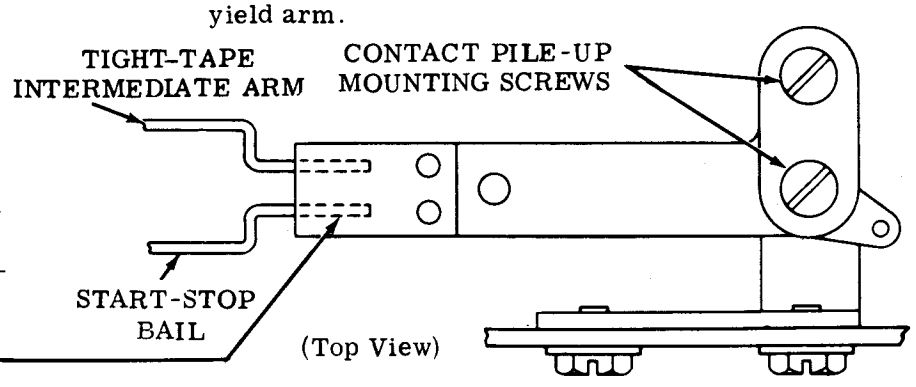

2.12 Main Bail Assembly

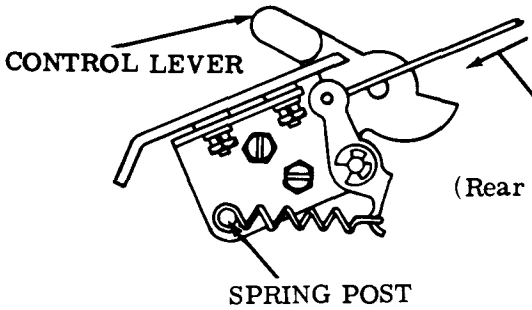

(C) CONTROL LEVER DETENT SPRING
(Not on relay controlled unit)

Requirement
Control lever in run position
Min 14 oz---Max 22 oz
to start detent bail moving away from control lever detent.

(D) MAIN BAIL TRIP LEVER

Requirement (Replace top plate)
Unit in stop position, clearance between tip of highest sensing pin and top surface of tape guideplate should be flush to 0.005 inch below.

To Adjust
Loosen front and rear transfer lever guide post nuts and rotate post so that its eccentric positions trip lever.

(B) FEED RATCHET DETENT SPRING

Requirement
With main shaft in stop position and feed pawl held away from its ratchet
Min 8 oz---Max 13 oz
to start roller moving away from ratchet.

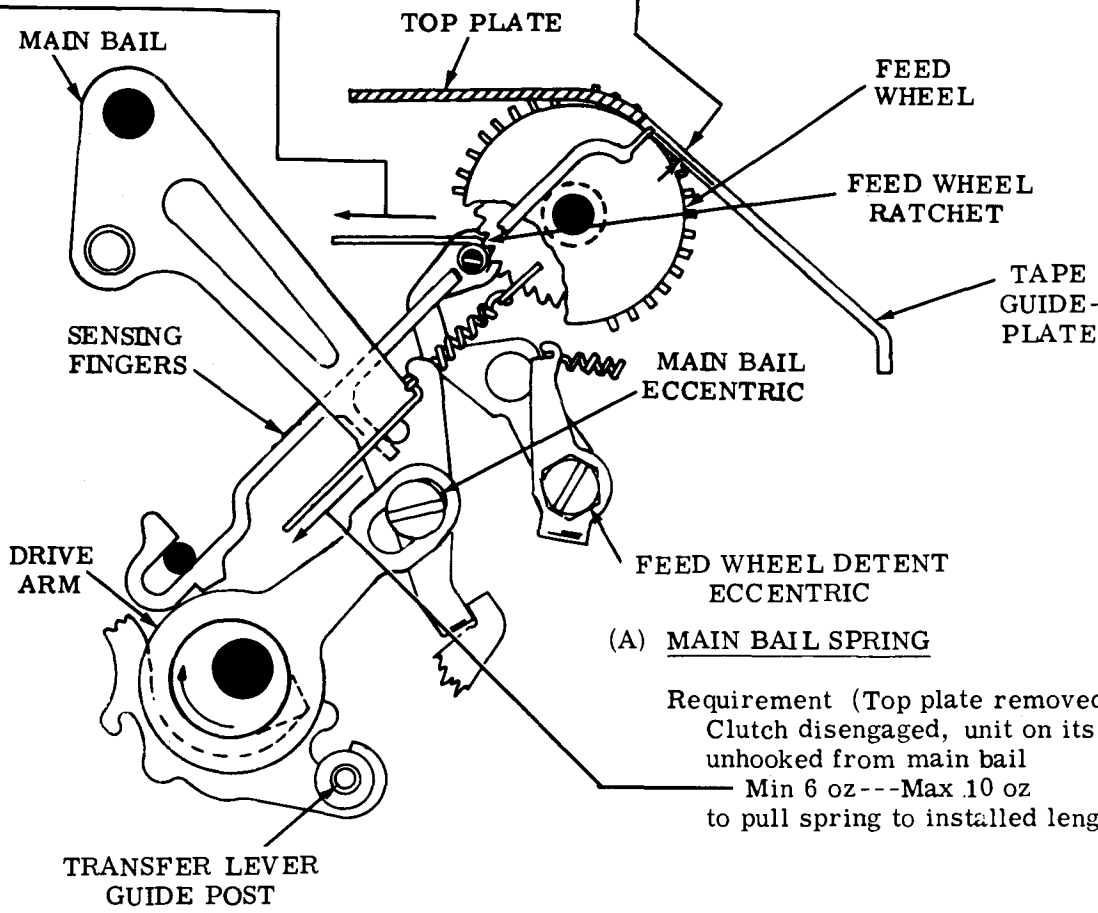

(A) MAIN BAIL SPRING

Requirement (Top plate removed)
Clutch disengaged, unit on its back. Spring unhooked from main bail
Min 6 oz---Max 10 oz
to pull spring to installed length.

2.13 Code Sensing Fingers

(A) SENSING FINGER SPRING

Requirement

Unit in upright position, sensing fingers in their uppermost position, and rubout deleter bail held away from the sensing finger

Min 2 oz---Max 3 oz

to move a sensing finger to a position flush with the tape guideplate.

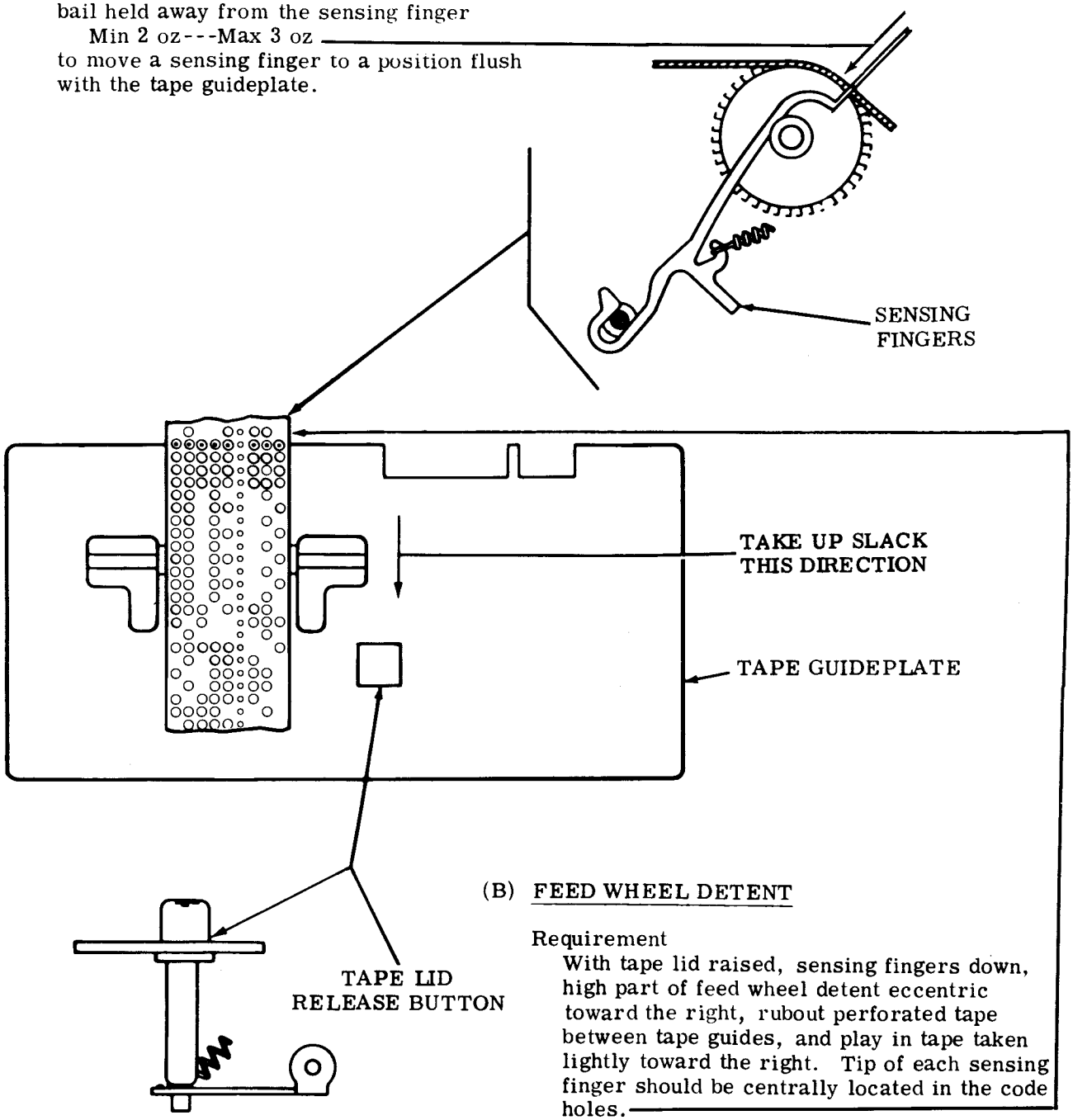

(B) FEED WHEEL DETENT

Requirement

With tape lid raised, sensing fingers down, high part of feed wheel detent eccentric toward the right, rubout perforated tape between tape guides, and play in tape taken lightly toward the right. Tip of each sensing finger should be centrally located in the code holes.

To Adjust

Hold feed pawl away and rotate the feed wheel detent eccentric screw. See figure on page 15.

2.14 Feed Pawl Mechanism

(A) FEED PAWL

Requirement (Top plate removed)
With high part of eccentric toward the right and sensing fingers in their lowermost position, clearance between feed pawl and ratchet tooth just engaged.
Min some---Max 0.003 inch

To Adjust
With eccentric screw locknut loosened, position the screw. Recheck requirement at four positions of ratchet approximately 90 degrees apart.

(B) FEED PAWL SPRING

Requirement
With unit tilted toward the left and main shaft in its stop position
Min 2 oz---Max 3-1/2 oz
to start pawl moving.

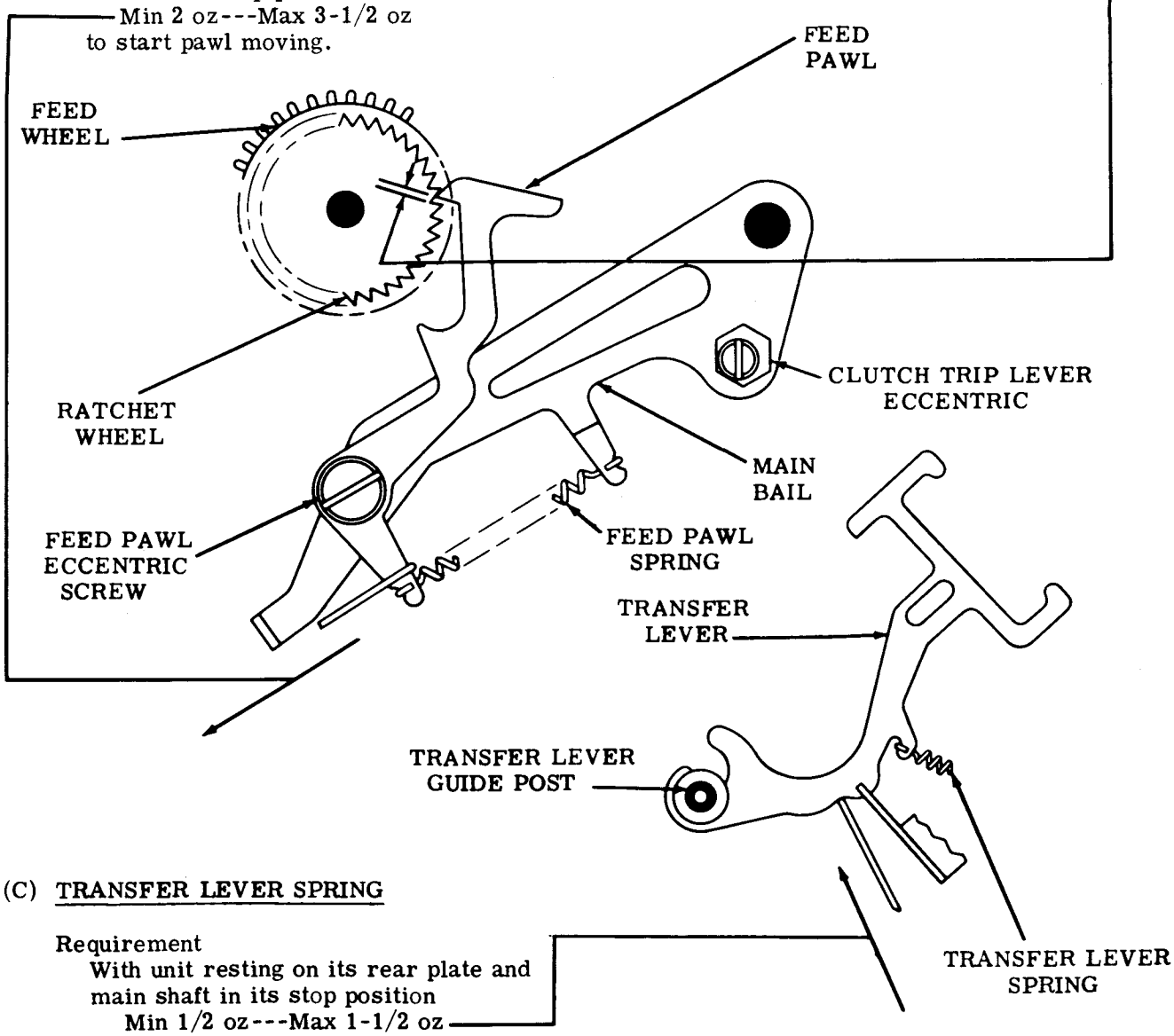

(C) TRANSFER LEVER SPRING

Requirement
With unit resting on its rear plate and main shaft in its stop position
Min 1/2 oz---Max 1-1/2 oz
to start each lever moving.

2.15 Main Bail Trip Assembly

(A) MAIN BAIL

(1) Requirement (Replace top plate)
Main bail in lowest position, horizontal clearance between main bail arm and main bail trip lever should be
Min some---Max 0.015 inch

(2) Requirement
Main bail in lowest position and clutch magnet operated, clearance between vertical surfaces should be
Min 0.005 inch

To Adjust
Position main bail eccentric with nut on eccentric screw loosened. Check and refine, if necessary, MAIN BAIL TRIP LEVER (2.12).

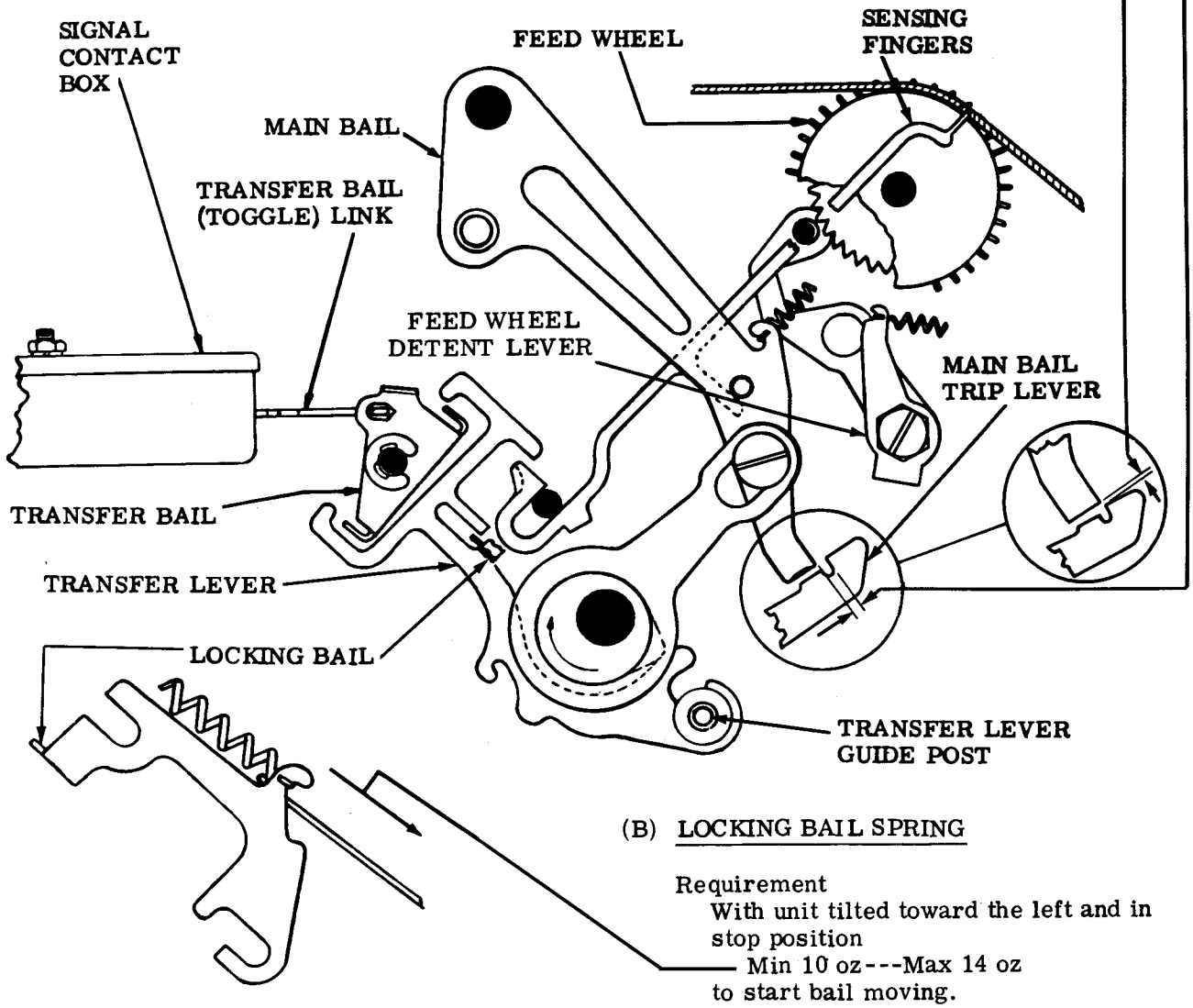

(B) LOCKING BAIL SPRING

Requirement
With unit tilted toward the left and in stop position
Min 10 oz---Max 14 oz
to start bail moving.

2.16 Transfer Bail Stabilizer Mechanism

(A) TRANSFER BAIL STABILIZER

Requirement

(a) With a rubout combination selected, rotate main shaft until no. 3 transfer lever is on high part of its cam. Check clearance between side of transfer bail extension and its latch.

(b) Repeat above procedure with a space combination selected and check the clearance on other latch. Clearance in marking and spacing position should be equal within 0.002 inch.

To Adjust

With stabilizer assembly mounting screws friction tight, position the assembly.

Note: Latches should drop in place as other transfer levers cam the transfer bail. Where possible, use a signal checking device to refine this adjustment following SIGNAL CONTACT ADJUSTMENT (2.17).

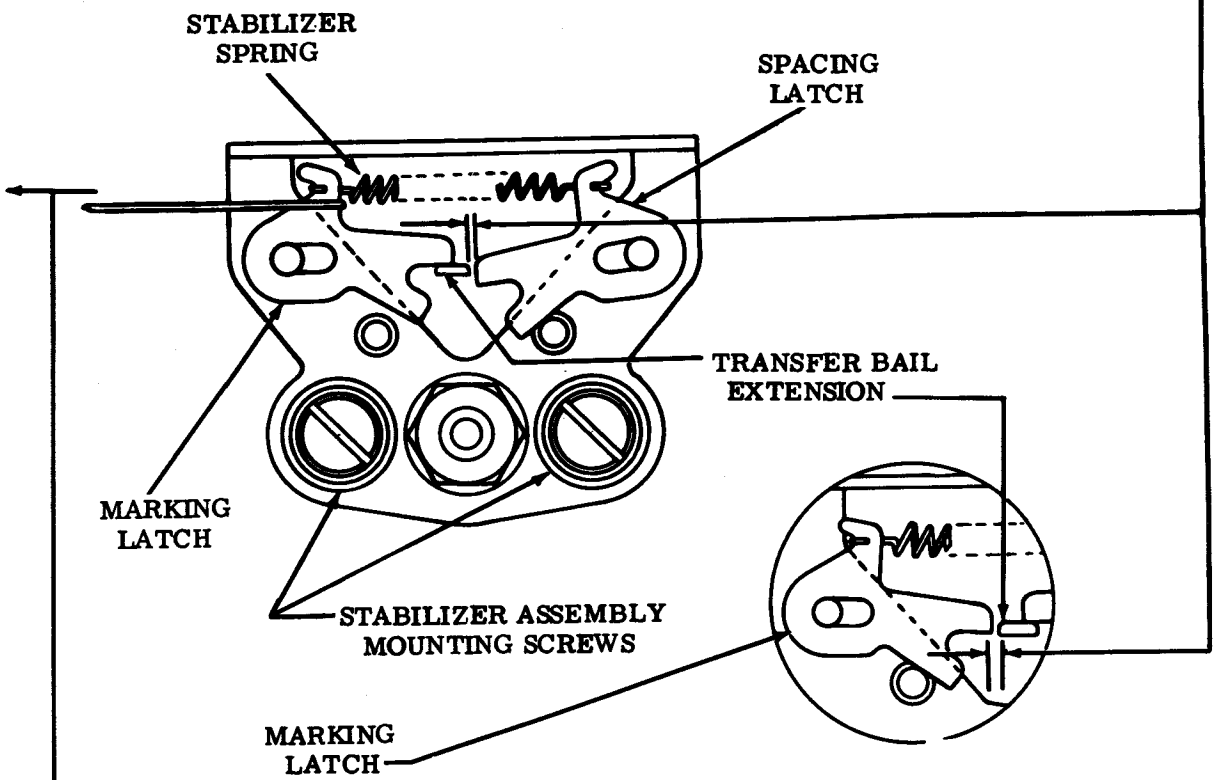

(B) STABILIZER SPRING

Requirement

With unit upright and main shaft in stop position
Min 2-1/2 oz---Max 5 oz
to start stabilizer latch moving.

2.17 Signal Contact Assembly

(A) SIGNAL CONTACT

Requirement (Coverplate and contact box cover removed)
Contact gap in the marking position and the spacing position should be equal when clearance between respective contacts is maximum. (Engage clutch and rotate main shaft slowly.)

To Adjust
With contact box mounting screws friction tight, position box with its eccentric.

Note: Use test set such as DXD where possible to refine adjustment. Refer to 2.21.

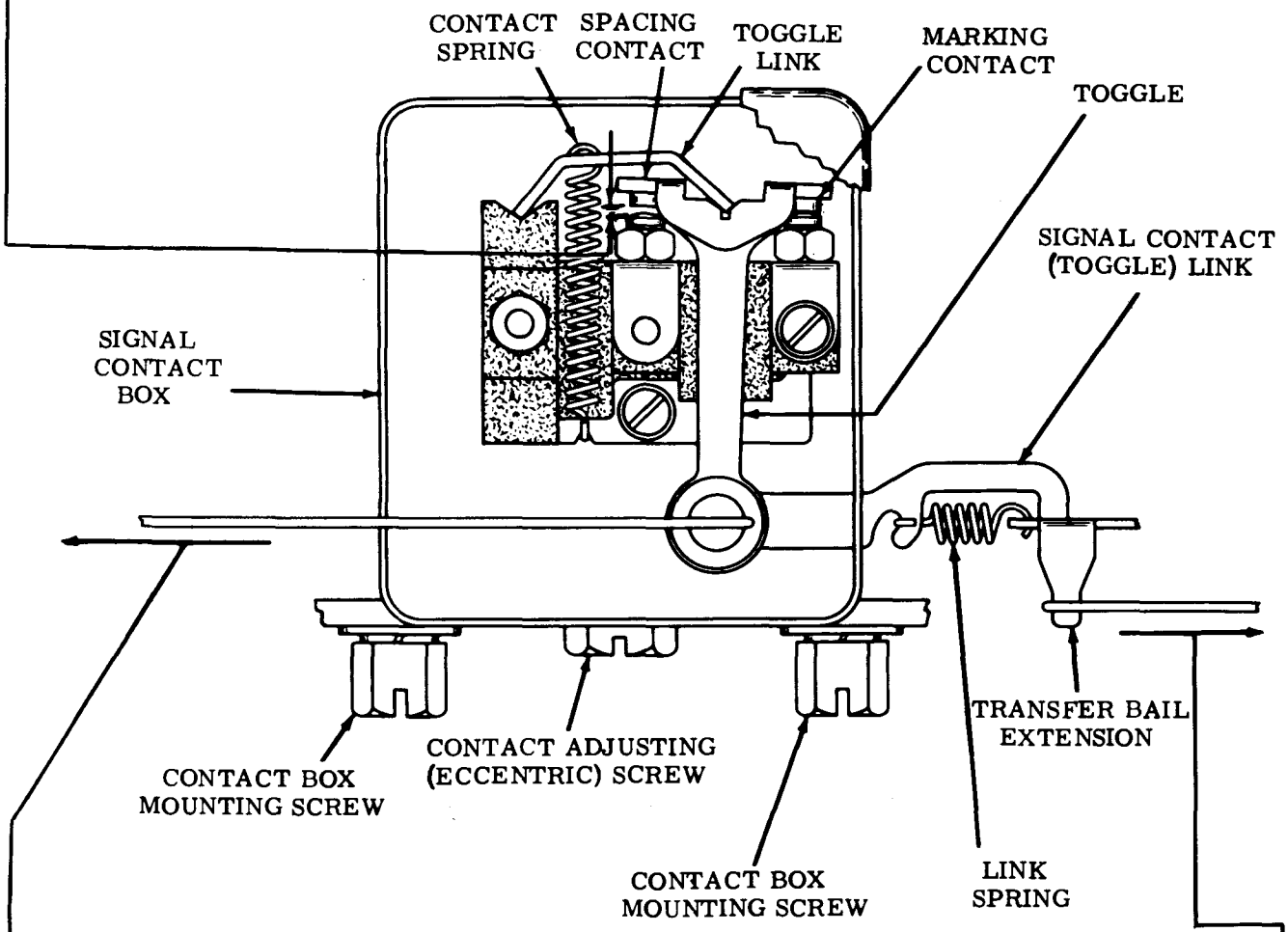

(B) SIGNAL CONTACT SPRING

Requirement
With main shaft in stop position and cover of contact box removed, unhook toggle link spring and move transfer bail to spacing position (right)
Min 2 oz---Max 3-1/2 oz
to open spacing contacts (left).

(C) SIGNAL CONTACT LINK SPRING

Requirement
With main shaft in stop position and stabilizer spring unhooked, move latches away from transfer bail extension (2.16). Hold toggle firmly against contacts.
Min 6 oz---Max 12 oz
to start transfer bail extension moving.

2.18 Clutch Trip Magnet Assembly

(A) CLUTCH MAGNET

(1) Requirement
With armature in its energized position, the armature should contact the core of the magnet farthest away from the armature hinge. Clearance between armature and core nearest armature hinge
Min 0.004 inch---Max 0.007 inch
at point of least clearance.

To Adjust
With magnet assembly mounting screws removed, lift assembly from unit. Invert assembly, loosen hinge bracket mounting screws and position bracket.

(2) Requirement
With armature in its energized position and high part of backstop eccentric upward, clearance between armature bail and backstop
Min 0.045 inch---Max 0.055 inch

To Adjust
Loosen backstop clamp nut and position the eccentric.

(3) Requirement
With magnet assembly replaced and clutch disengaged, clearance between end of armature bail extension and main bail latch
Min 0.007 inch---Max 0.015 inch

To Adjust
With bracket mounting screws friction tight, move assembly to its lowermost position then position bracket by its adjusting slot. Refine requirements if necessary.

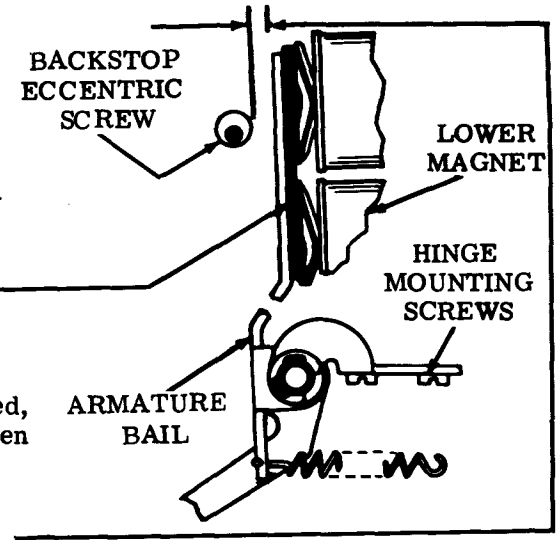

(B) ARMATURE BAIL SPRING

Requirement
With armature in de-energized position and main bail latchlever held away
Min 2 oz---Max 2-3/4 oz
to start armature moving.

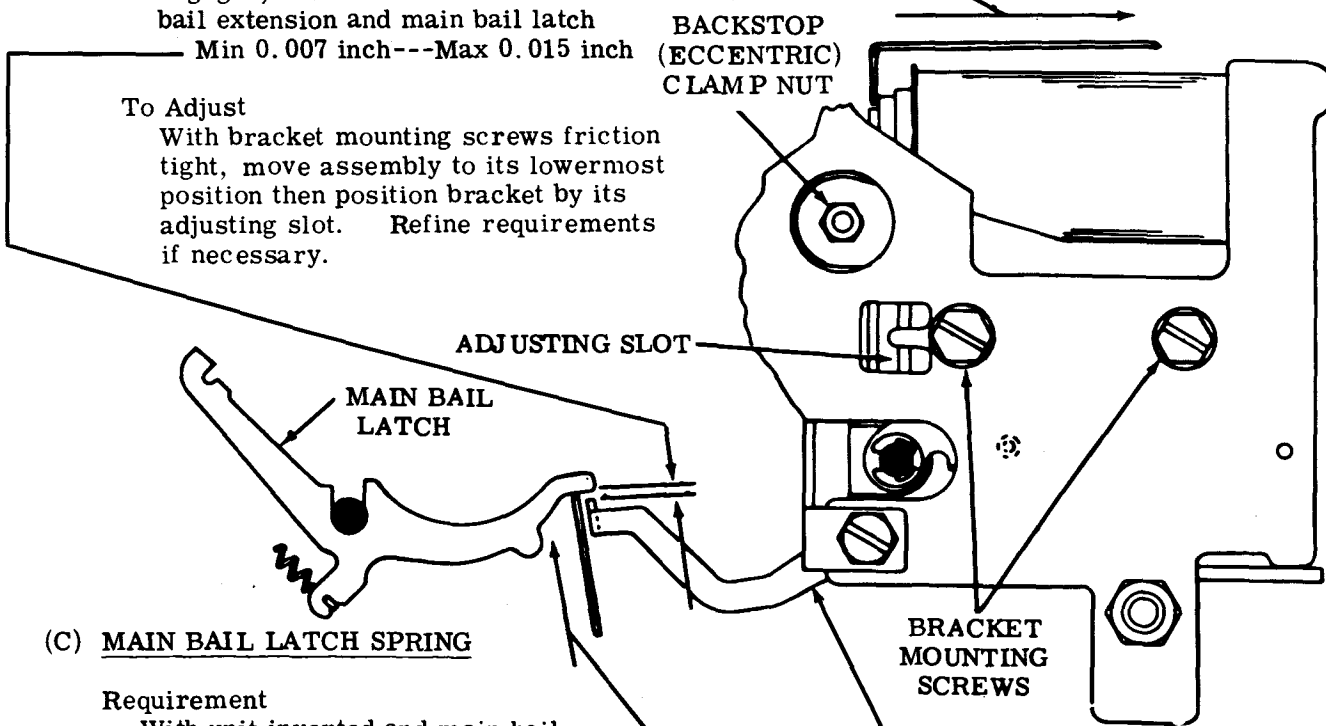

(C) MAIN BAIL LATCH SPRING

Requirement
With unit inverted and main bail latch released
Min 3/4 oz---Max 2 oz
to start main bail latch moving.

2.19 Tape Lid Assembly

(A) COVERPLATE DETENT SPRING

Requirement
With spring scale applied to center of one detent
Min 28 oz---Max 40 oz
to start plunger moving.

Note: Outer edge of each mounting bracket should be approximately in line with shoulder of its mounting stud. Replace tape guideplate, tape-out tension spring, top plate, and coverplate.

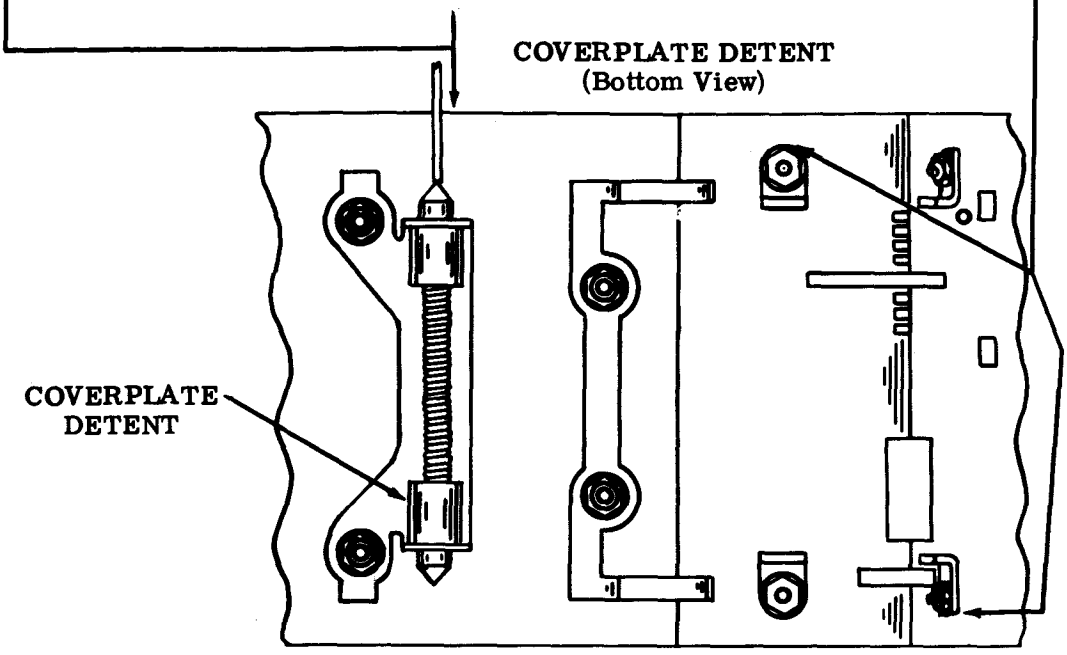

(B) TAPE LID RELEASE BUTTON SPRING

Requirement
With tape guideplate held horizontally and tape lid unlatched
Min 28 oz---Max 48 oz
to start tape lid bail moving.

(C) TAPE LID SPRING

Requirement
With tape lid release button held fully depressed and tape guideplate in horizontal position
Min 2-1/2 oz---Max 4-1/2 oz
to move open end of tape lid against the guideplate.

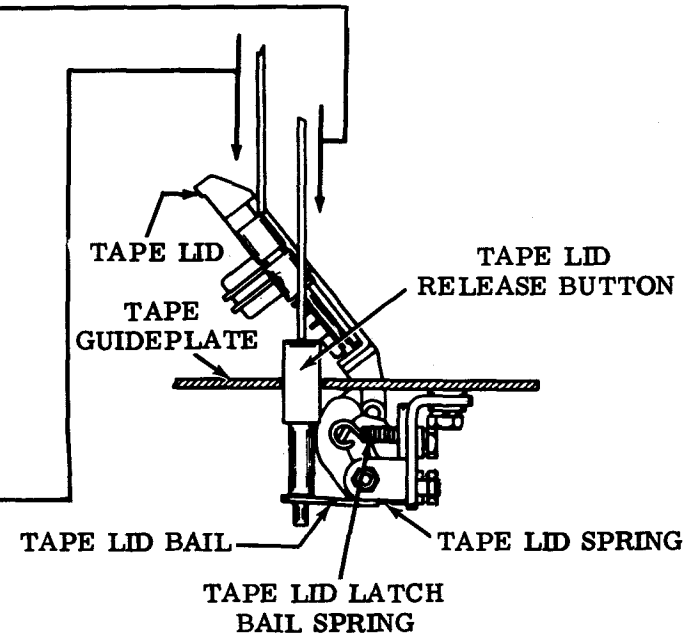

2.20 Transmitter Distributor Gear

TRANSMITTER DISTRIBUTOR GEAR

Requirement
There should be only a perceptible amount of backlash between the intermediate drive gear and transmitter distributor gear

To Adjust
With transmitter distributor mounting screws (3) loosened, position the unit on base.

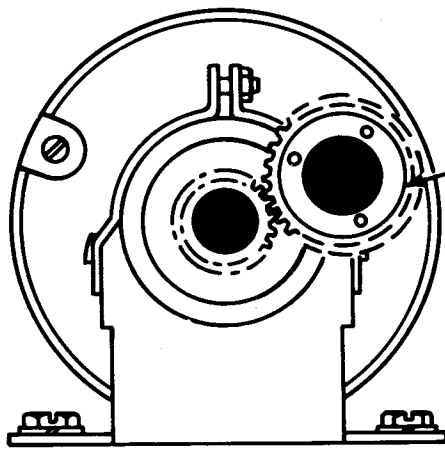

2.21 Signal Pulse Refinement

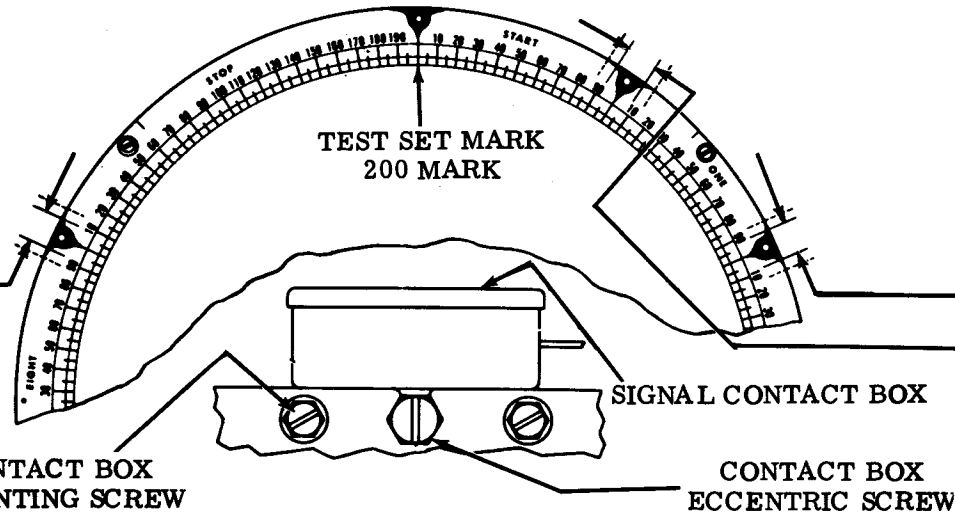

CAUTION: ON ALL UNITS EQUIPPED WITH A SIGNAL REGENERATOR CIRCUIT, REMOVE THE SIGNAL REGENERATOR CARD BEFORE APPLYING DXD TIMING PROBES TO CONTACT ACCESS TERMINALS.

SIGNAL PULSE REFINEMENT — FINAL ADJUSTMENT WITH DXD OR STROBE (If available)
(11.0 Unit Code - Speeds up to and including 100 wpm)

Procedure

Plug signal distortion test set into signal line to view pulse image generated by the marking and spacing contacts. Synchronize signal generator with DXD so that end of stop pulse image aligns with the 200 mark on DXD scale when both units are operated at same speed and transmission is continuous.

Note 1: Figures appearing in ( ) in 2.21 and 2.22 are relaxed requirements for transmitter distributor sets used in circuits that employ a signal regenerator.

Note 2: End of stop pulse image should not vary from the 200 mark by more than one scale division. If a greater variation occurs, move the scale until the variations extend equally on either side of the 200 mark.

(1) Requirement

(a) Each marking code pulse should start no later than the 8th (12th) mark of the pulse under observation and start no earlier than 92nd (88th) mark of the previous pulse.

(b) Each marking code pulse should end no earlier than the 92nd (88th) mark of the pulse under observation and no later than the 8th (12th) mark of the following pulse.

(c) Each marking code pulse may have one break provided the break is not over three divisions wide and provided the break occurs only at the end of the code pulse image between the 92nd (88th) mark and the end of the image.

(d) The stop pulse should start no earlier than the 92nd (88th) mark of the last intelligence pulse and start no later than the 8th (12th) mark of the stop position.

(e) The stop image should not change in length or position, when viewed on DXD, to exceed one division while changing from R to Y selection (or equivalent codes). If necessary, reorient 200 mark on stop scale with end of stop pulse image.

2.22 Signal Pulse Refinement (continued)

To Adjust
With signal contact box mounting screws friction tight, rotate the eccentric (right or left). Tighten mounting screws and recheck adjustment.

(2) Requirement
When the spacing contact of the signal generator is wired the spacing contact should meet the following requirements:

(a) Each spacing code pulse should start no later than the 8th (12th) mark of the pulse under observation and start no earlier than the 92nd (88th) mark of the previous pulse.

(b) Each spacing pulse should end no earlier than the 92nd (88th) mark of the pulse under observation and end no later than the 8th (12th) mark of the following pulse.

(c) Each spacing pulse may have one break provided the break is not over three divisions wide and provided the break occurs only at the end of the code pulse image between the 92nd (88th) mark and the end of the image.

(d) The start pulse should start no earlier than the 192nd (188th) mark of the stop pulse and start no later than the 8th (12th) mark of the start pulse. The start pulse should end no earlier than the 92nd (88th) mark of the start pulse and end no later than the 8th (12th) mark of the number one pulse.

To Adjust
Same as above. Recheck marking contact if a spacing adjustment is made.

Note 3: If the signal requirements cannot be met, refine TRANSMITTER DISTRIBUTOR GEAR (2.20) and TRANSFER BAIL STABILIZER (2.16) with signal viewed on DXD.

2.23 Gold-Plated Signal Contacts

(A) Units may have signal contacts made of either unplated or gold-plated tungsten. If in doubt as to the type of contacts, remove signal generator cover and inspect contacts for gold plating.

(B) Cleaning

(1) Use twill jean cloth (KS2423, TP107162) to clean gold-plated contacts.

(2) Open contacts. Drop strip of twill jean between them. Close contacts. Draw twill jean part way through. Open contacts and withdraw twill jean.

(3) This procedure prevents small fibres at edges of twill jean strip from becoming lodged between contacts.

(4) Clean unplated tungsten contacts in accordance with standard procedures.

(C) Servicing for Low-Voltage Applications

(1) For standard applications including those with data sets, observe standard maintenance procedures and intervals. Low-voltage applications are covered below.

(2) The recommended cleaning interval for gold plated contacts in special low level applications (less than 250 microwatts) having an average weekly use of 60 hours should not exceed 90 days. This interval may be reduced, dependent on the signal circuit configuration, usage, and environment. Contacts should be cleaned as described in (B) Cleaning, above.

Note 1: Applying operating voltage of standard Distortion Test Set directly to contacts may damage gold plating and impair low-voltage operation. When electrically adjusting or testing contacts (2.17) use an intermediate device, keyed by the contacts, to interrupt current to stroboscopic lamp of test set. This intermediate device must be capable of being keyed by a 3- to 20-volt change at maximum of 20 milliamperes.

Note 2: Normally for low-voltage applications contacts should be used in circuits operating between 3 and 20 volts dc at a current level not to exceed 60 milliamperes. Between 20 and 70 volts dc the current should be adjusted so as not to exceed a 120 milliwatt power level. The contacts are not normally intended for use on voltages above 70 volts dc. Exceeding this level for an appreciable length of time may result in damage to gold plating and make them unfit for low-voltage applications.

Note 3: The above information also applies to 2.17, 2.21, and 2.22 of this section.

3. VARIABLE FEATURES

3.01 Timing Contact Mechanism (Early Design)

(C) TIMING CONTACT SPRING

Requirement
Min 5 oz---Max 8 oz
to move spring from stiffener.

To Adjust
Remove contact bracket assembly, loosen contact pile-up mounting screws and bend contact spring with bender (TP110445). Retighten pile-up mounting screws and check. Replace contact bracket assembly. Refine adjustments (A) and (B), if necessary.

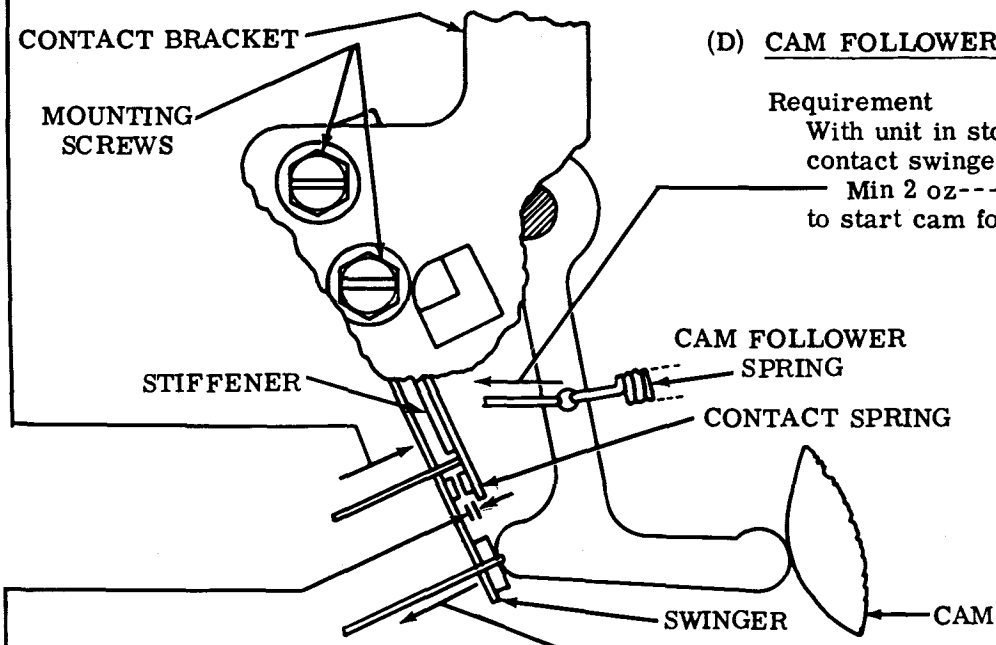

(D) CAM FOLLOWER SPRING

Requirement
With unit in stop position and timing contact swinger spring held away
Min 2 oz---Max 4 oz
to start cam follower moving.

(A) TIMING CONTACT BRACKET

(1) Requirement
With follower on low part of cam contacts should be closed when nylon pad is raised 0.006 inch and open when pad is raised 0.010 inch.

(2) Requirement
With follower on any peak of cam, contact gap should be
Min 0.003 inch
on units prior to serial No. 42200
Min 0.015 inch

To Adjust
Place unit in stop position. Adjust contact bracket by means of screwdriver lug, visible through hole in rear plate, with bracket mounting screws loosened.

(B) TIMING CONTACT SWINGER

Requirement
With contact closed
Min 2 oz---Max 3 oz
to just separate contacts

To Adjust
Bend swinger with spring bender TP110445.

3.02 Timing Contact Refinement

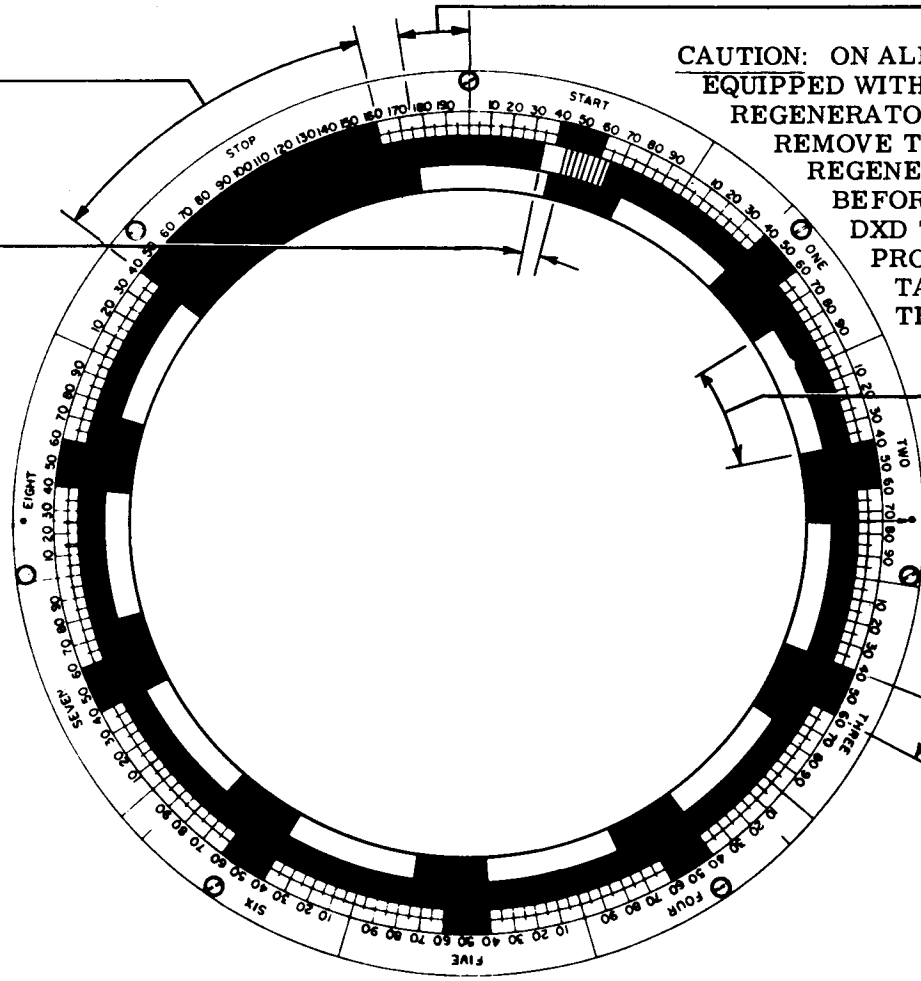

CAUTION: ON ALL UNITS EQUIPPED WITH A SIGNAL REGENERATOR CIRCUIT, REMOVE THE SIGNAL REGENERATOR CARD BEFORE APPLYING DXD TIMING PROBES TO CONTACT ACCESS TERMINALS.

TIMING CONTACT REQUIREMENTS (STROBE) (Using Distortion Test Set (DXD) if available).

(1) Zero the test set as previously described (2.21).

(2) The light image of the timing contacts should meet the following requirements for speeds up to and including 100 wpm.

(a) Open for a minimum of 20 divisions between the 25 division and 75 division points of each 100 division pulse.
Open for a minimum of 120 divisions between the 25 division and 175 division points of the stop pulse.

(b) The close to open transitions should be in multiples of 100 divisions ±5 divisions from the close to open transition of the start pulse.

(c) There should be no contact break between the 0 division point and the close to open transition point and no contact break between the 75 division point and 100 division point of each pulse. There should be no contact break between 175 division point and the 200 division point of the stop pulse.

3.03 Timing Contact Refinement (continued)

(d) Check and refine, if necessary, TIMING CONTACT BRACKET (3.01) for early design, or TIMING CONTACT BRACKET-PRELIMINARY (3.05) for later design.

(e) The timing contacts should be open in the rest position of the transmitter distributor.

To adjust, loosen the two timing contact bracket mounting screws until they are friction tight. Position the timing contact assembly by means of the screwdriver lug on the bracket visible through a hole in the rear plate so that the requirements are met. Tighten the screws and recheck the image on the DXD stroboscope.

3.04 Timing Contact Mechanism (Late Design)

Note: The timing contact assembly must be removed to check the following requirements.

(A) CAM FOLLOWER SPRING

Requirement
With the unit upright and in the stop position, it should require
Min 2 oz---Max 4 oz
to start the cam follower moving.

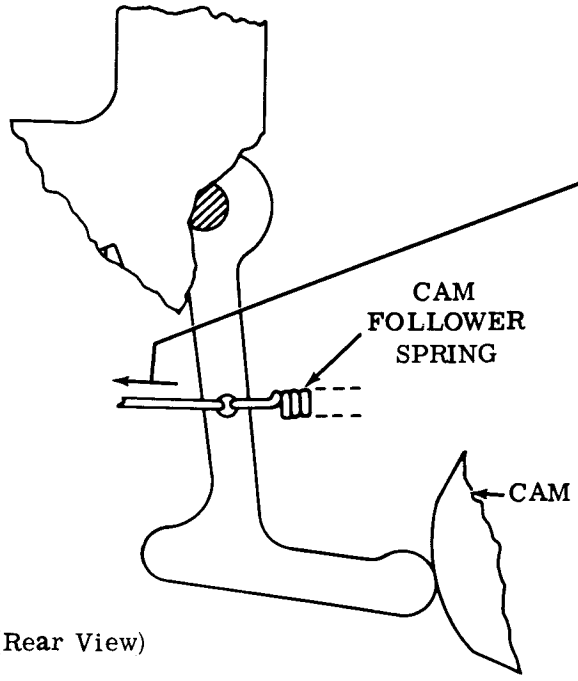

(Rear View)

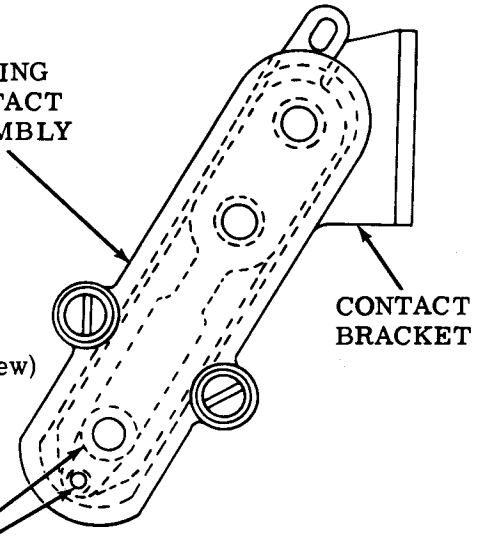

(Left Side View)

(B) TIMING CONTACT ALIGNMENT

Requirement
The contact points should be in line and the head of the plunger should be centered in the hole in the lower contact spring as gauged by eye.

To Adjust
With the contact assembly mounting screws friction tight, position the contact springs. Tighten screws firmly.

(C) TIMING CONTACT GAP

Requirement
With the plunger depressed flush with the bushing, the contact gap should be
Min 0.045 inch---Max 0.065 inch

To Adjust
Bend the lower contact spring.

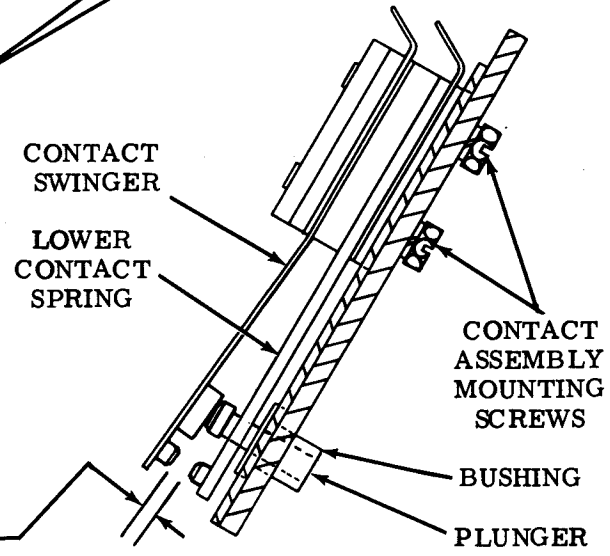

(Rear View)

3.05 Timing Contact Mechanism (Late Design)

TIMING CONTACT SPRING

Requirement
Min 3-1/2 oz---Max 4-1/2 oz
to open the normally closed contacts.

To Adjust
Bend the contact swinger.

Note: Replace the timing contact assembly at this time.

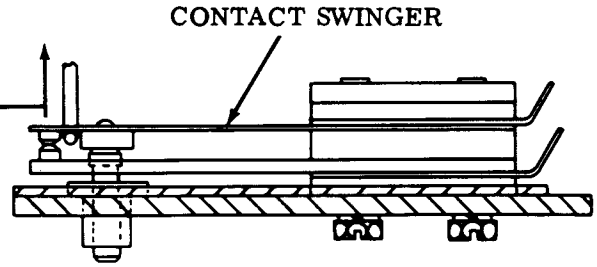

(Rear View)

TIMING CONTACT BRACKET — PRELIMINARY

(1) Requirement
With the unit in the stop position
Min 0.008 inch---Max 0.011 inch
gap between the contacts.

(2) Requirement
With cam follower on each low part of cam and clearance taken up between plunger and cam follower.
Min some---clearance between plunger and contact swinger.

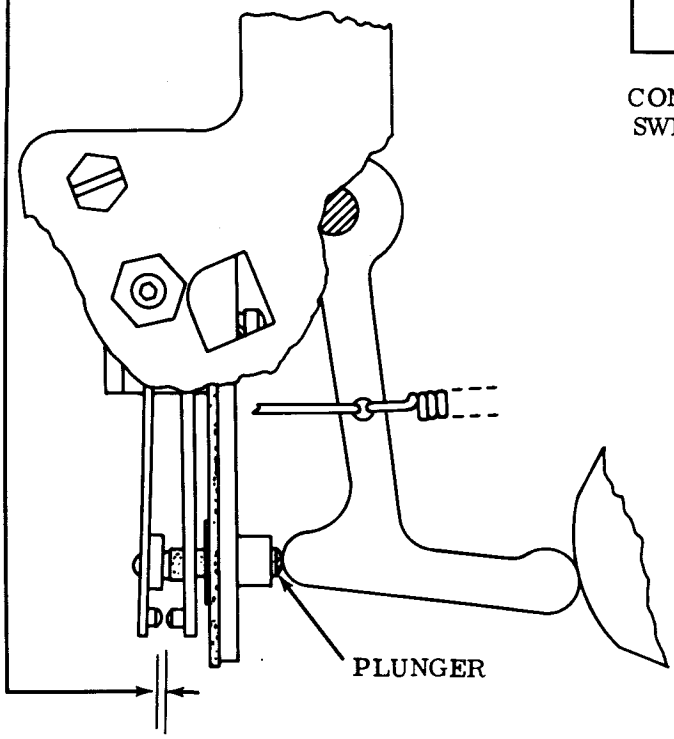

(Rear View)

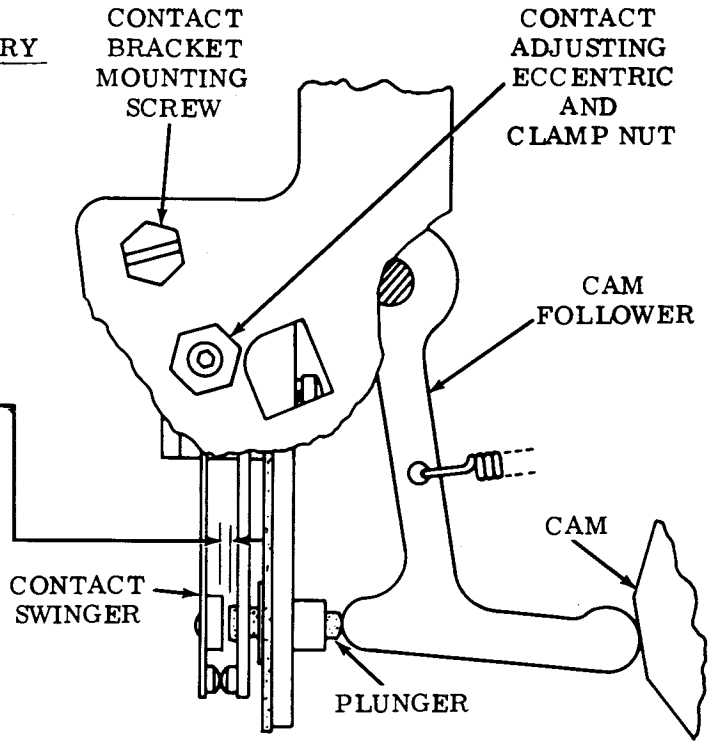

(Rear View)

To Adjust
With unit in the indicated position and the timing contact bracket mounting screw and contact adjusting clamp nut friction tight, position the contact assembly by means of the eccentric to meet Requirements (1) and (2). Tighten the mounting screw and eccentric clamp nut and recheck the adjustments.

Related Adjustment

TIMING CONTACT REQUIREMENTS (3.02)

3.06 Rubout Sensing Mechanism

(A) RUBOUT SENSING MECHANISM

Requirement
With DELETE (rubout) selection set up and timing bail on low part of its cam, the start-stop contact gap should be
Min 0.018 inch---Max 0.025 inch
Use light thumb pressure to hold bail against its cam when checking gap.

To Adjust
Position the timing arm on the yield arm with its clampscrew friction tight.

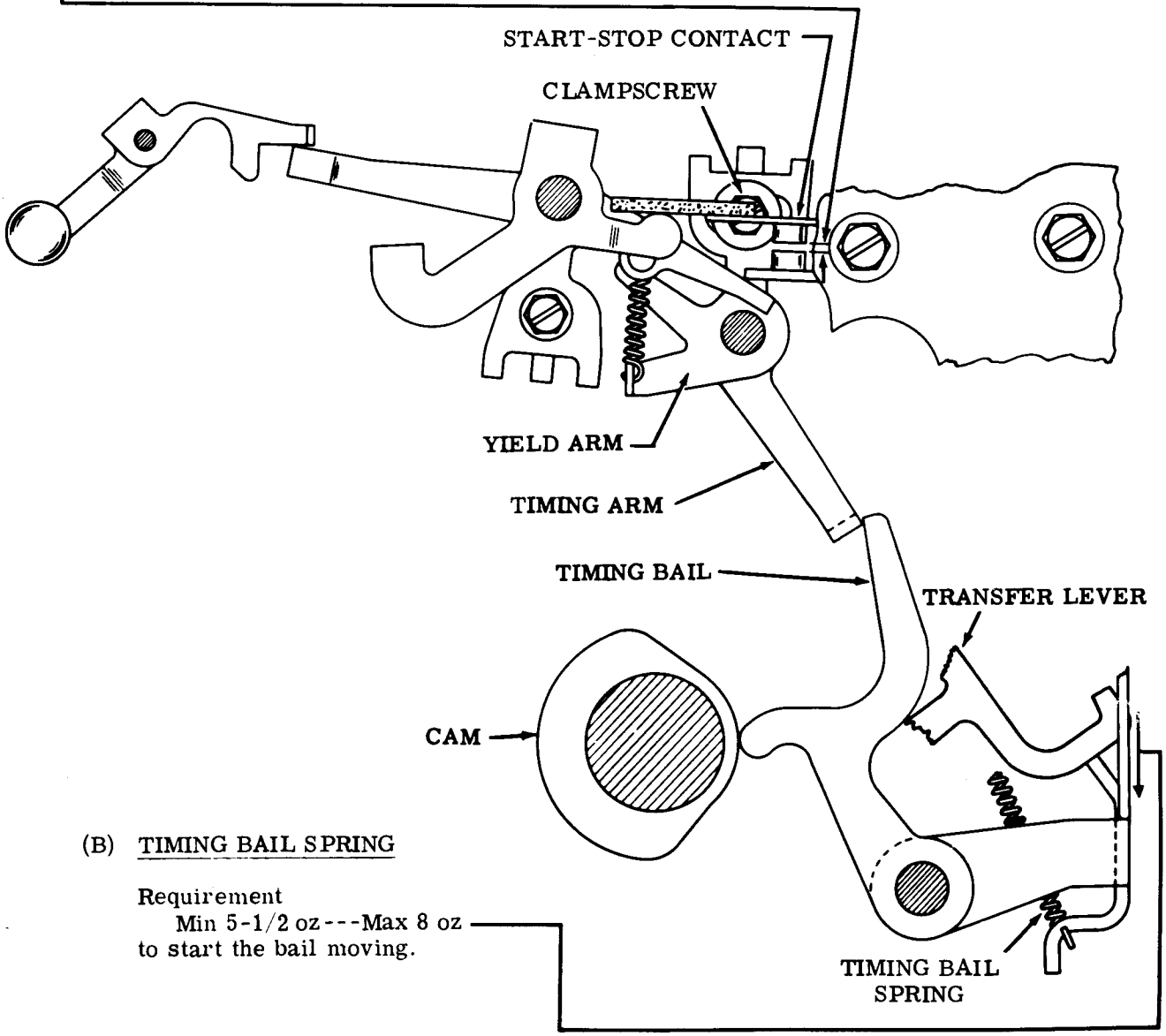

(B) TIMING BAIL SPRING

Requirement
Min 5-1/2 oz---Max 8 oz
to start the bail moving.

3.07 Code Reading Contacts

Initial Adjustments

Note: Initial adjustments should be made with the code reading contact assembly removed from the transmitter unit.

(A) NORMALLY CLOSED CONTACTS — BACKSTOP

Requirement
The lower contact leaves for all levels should be parallel to the mounting plate and in line with one another.

To Adjust
Bend backstop to meet requirement.

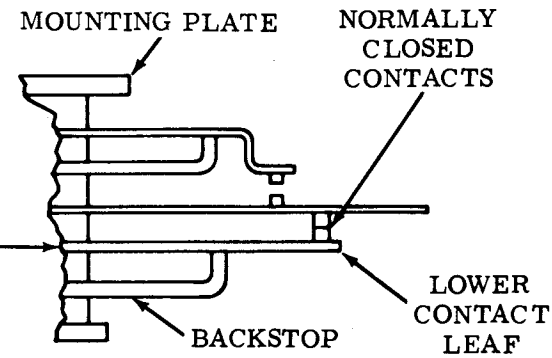

(B) NORMALLY CLOSED CONTACTS — SPRING TENSION

(1) Requirement
With swinger held away
Min 2 oz---Max 6 oz
to move lower contact leaf away from backstop.

To Adjust
Bend lower leaf. If it is necessary to bend backstop to obtain required tension, reposition backstop to meet NORMALLY CLOSED CONTACTS — BACKSTOP adjustment.

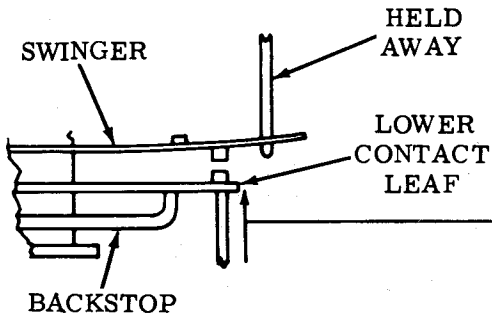

(2) Requirement
Min 30 grams---Max 40 grams
to open normally closed contacts.

To Adjust
Bend swinger.

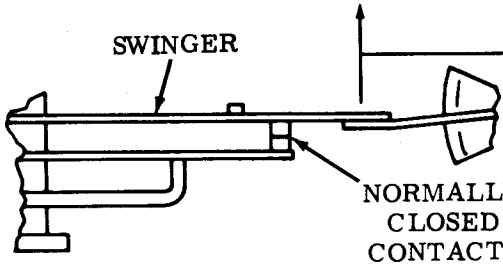

(C) NORMALLY OPEN CONTACTS — BACKSTOP

Requirement
Min 0.010 inch---Max 0.015 inch
gap between normally open contacts.

To Adjust
Bend associated backstop to meet requirement.

(D) NORMALLY OPEN CONTACTS — SPRING TENSION

Requirement
Min 30 grams---Max 40 grams
to move normally open contacts away from backstop.

To Adjust
Bend upper contact leaf. If it is necessary to bend backstop to obtain required tension, reposition backstop to meet NORMALLY OPEN CONTACTS — BACKSTOP adjustment.

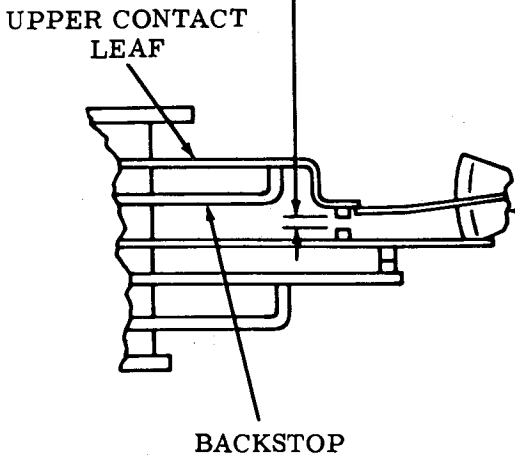

3.08 Code Reading Contacts (continued)

Secondary Adjustments

Note: The secondary adjustments should be made with the code reading contact assembly installed in the transmitter, and with the contact assembly bracket approximately centered in its adjustment range.

(A) CONTACT ASSEMBLY

Requirement
The swinger of each contact pile-up should be aligned with its associated sensing arm, as gauged by eye.

To Adjust
Loosen the screws which mount the contact assembly to the contact bracket, and position the assembly to meet requirement.

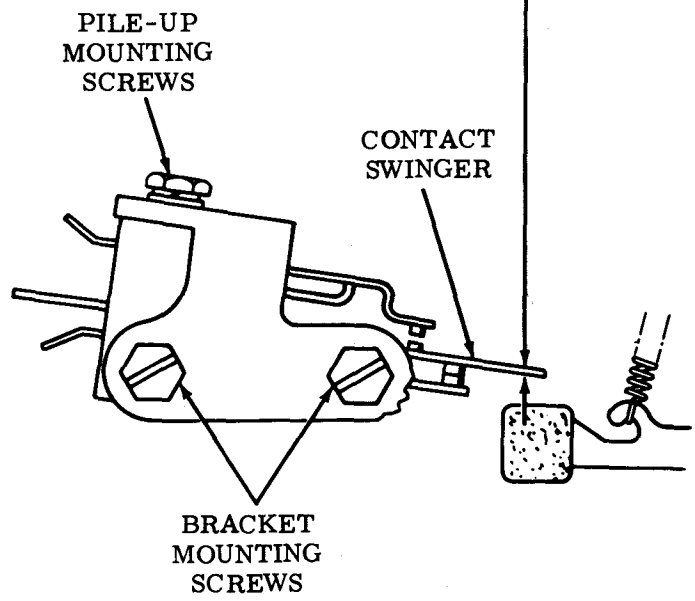

(B) CONTACT BRACKET

Requirement
With the null combination selected and the upstop post out of the way
Min 0.015 inch---Max 0.025 inch
gap between contact assembly swingers and insulator on contact sensing arm.

To Adjust
Loosen the contact bracket mounting screws ((A) CONTACT ASSEMBLY) and position the bracket to meet requirements.

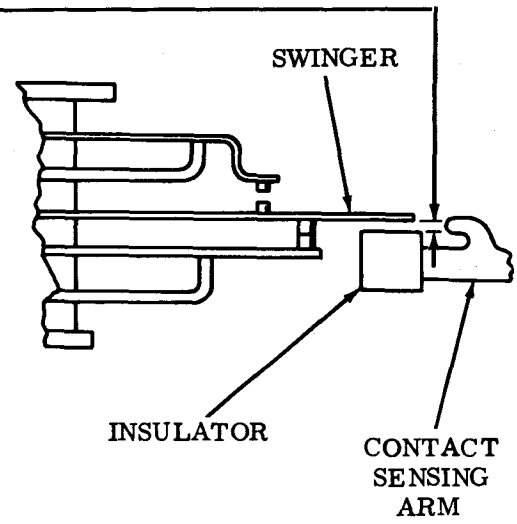

3.09 Code Reading Contacts (continued)

Secondary Adjustments (continued)

(A) ECCENTRIC UPSTOP

Requirement
With rubout combination selected, clutch engaged, and main shaft rotated until the sensing arms are in their uppermost position, there should be
Min some---Max 0.008 inch clearance between the upper contact leaf and its backstop.

To Adjust
Loosen the nut that secures the eccentric upstop to the front plate and turn the eccentric until the requirement is satisfied. The high part of the eccentric should be toward left.

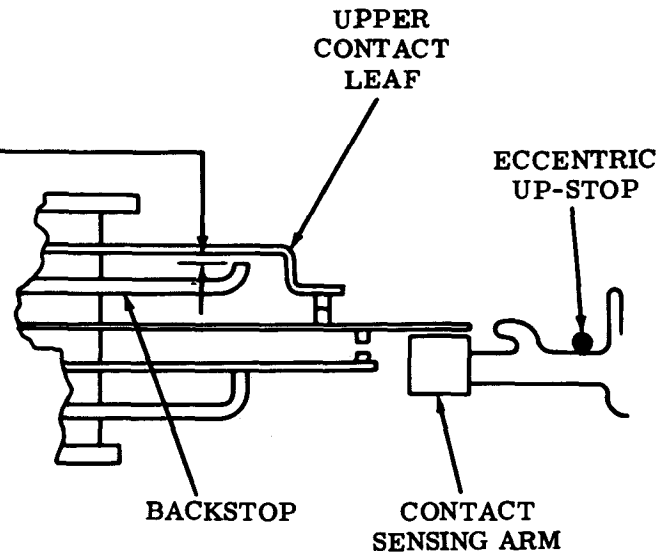

(B) SENSING ARM SPRING

Requirement
With clutch disengaged
Min 2-1/2 oz---Max 3-1/2 oz to start sensing arm moving.

(C) SPLIT BAIL ECCENTRIC

Requirement
With the null combination selected and clutch tripped, clearance between the transfer levers and associated sensing arms
Min 0.020 inch---Max 0.030 inch

To Adjust
Rotate the split bail eccentric with its locknut loosened.

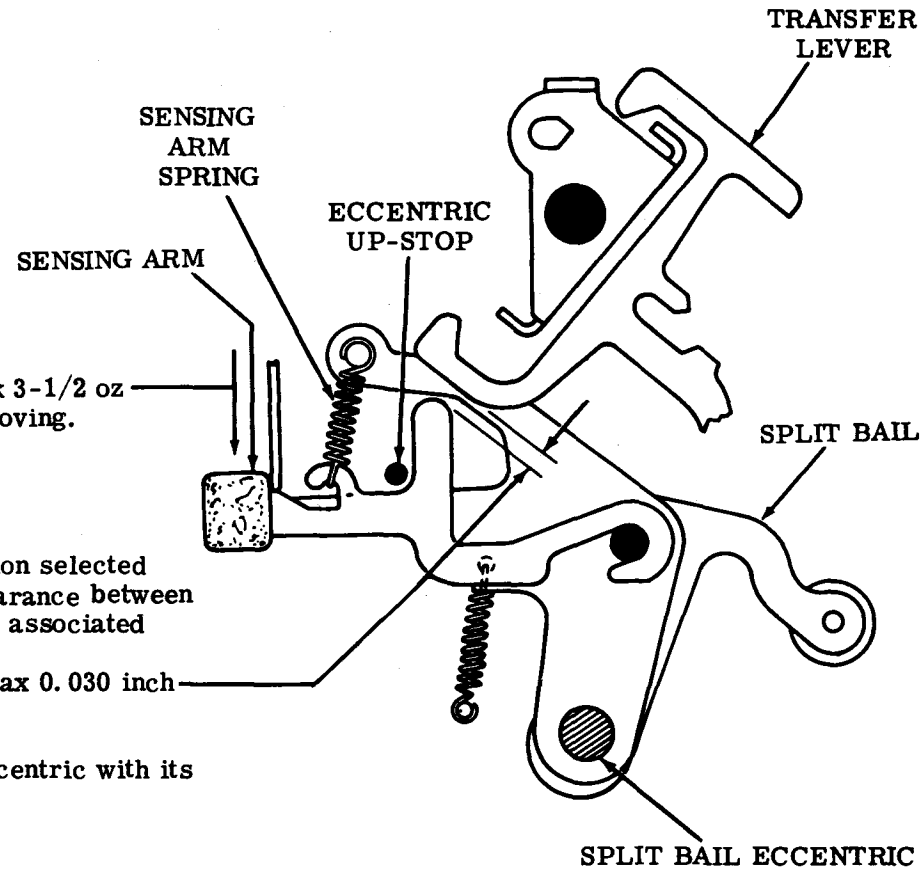

3.10 Code Reading Contacts (continued)

Final Adjustments (Strobing)

CONTACT BRACKET

Note 1: A DXD, if available, operating at 600 opm with an 11 unit code scale should be used for strobing.

(1) Requirement
Marking pulse (trace) length
Min 625---Max 708 scale divisions

(2) Requirement
Marking pulse breaks to be confined to first and last 15 scale divisions of trace.

(3) Requirement
Spacing pulse (trace) length full scale trace without breaks.

To Adjust
Loosen the contact bracket mounting screws and position bracket to meet requirements.

Note 2: If requirements cannot be met, recheck Initial and Secondary Adjustments and refine if necessary.

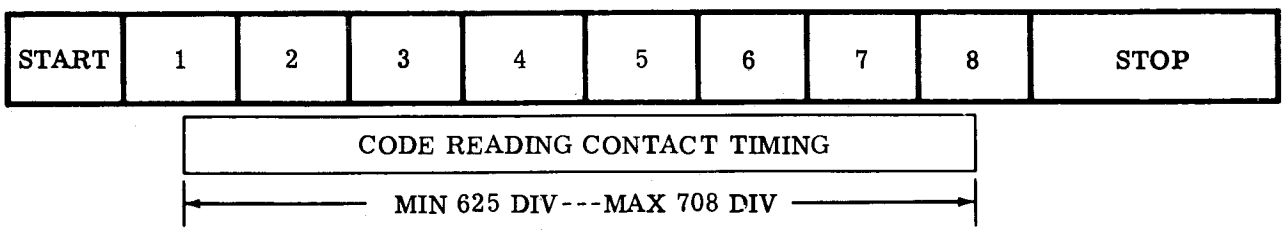

3.11 Auxiliary No. 1 Contact Assembly

Initial Adjustments

Note: The initial adjustments should be made with the auxiliary contacts removed from the transmitter unit.

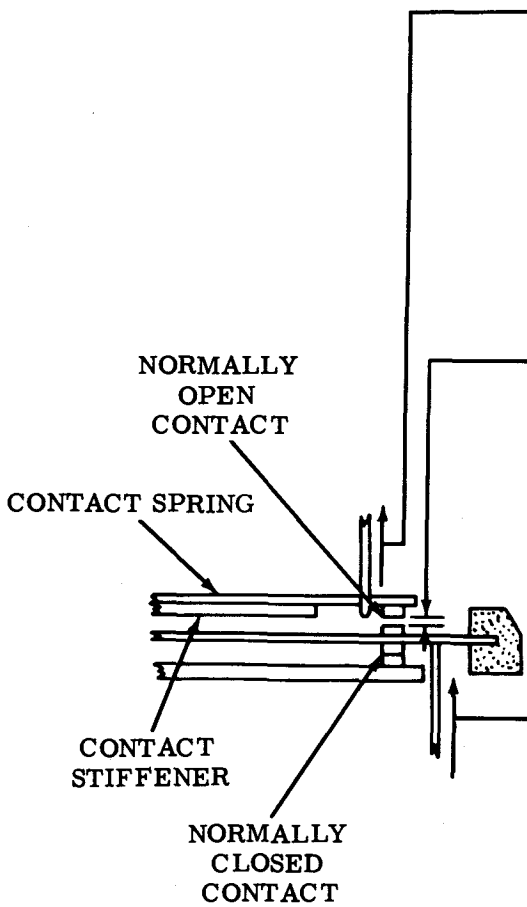

(A) NORMALLY OPEN CONTACT SPRING

Requirement
Min 5-1/2 oz---Max 6 oz
to move normally open contact away from stiffener.

To Adjust
Bend the normally open contact spring to meet requirement.

(B) NORMALLY OPEN CONTACT STIFFENER

Requirement
Min 0.015 inch---Max 0.020 inch
gap between normally open contacts.

To Adjust
Bend the contact stiffener to meet requirement.

(C) SWINGER

Requirement
It should require
Min 4 oz---Max 5 oz
to open the normally closed contact.

To Adjust
Bend the swinger contact to meet requirement.

3.12 Auxiliary No. 1 Contact Assembly (continued)

Secondary Adjustments

Note: The secondary adjustments should be made with the auxiliary contacts installed.

(A) CONTACT BRACKET

Requirement
With clutch disengaged and latched, clearance between the insulator on the swinger and the bail
Min 0.025 inch---Max 0.035 inch

To Adjust
Position the contact bracket with its mounting screws loosened.

(B) CONTACT ASSEMBLY

Requirement
The swinger insulator should be centrally located with respect to its operating bail.

To Adjust
Loosen the contact assembly screws and position the swinger and contact springs.

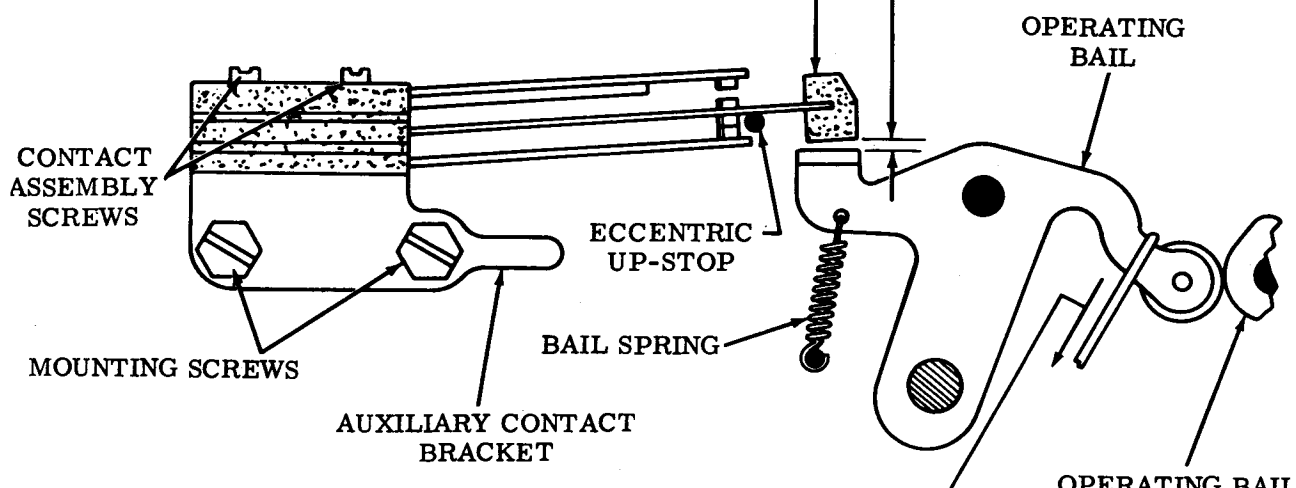

(C) OPERATING BAIL SPRING

Requirement
Clutch disengaged
Min 5 oz---Max 7 oz
to move follower roller away from low part of its cam.

3.13 Auxiliary No. 1 Contact Assembly (continued)

Final Adjustment (Strobing)

CONTACT BRACKET

Note 1: A DXD, if available, operating at 600 opm with an 11 unit code scale should be used for strobing.

(1) Requirement
Auxiliary No. 1 contact trace should begin a minimum of 10 divisions after latest code reading contact has closed, have a minimum pulse length of 590 divisions, and end a minimum of 14 divisions before earliest code reading contact has opened.

(2) Requirement
Trace may have a maximum of two 2-division breaks within 8 divisions of the start or end of trace.

To Adjust
Loosen the contact mounting bracket screws and position bracket to meet requirements.

Note 2: If requirements cannot be met, recheck Initial and Secondary Adjustments.

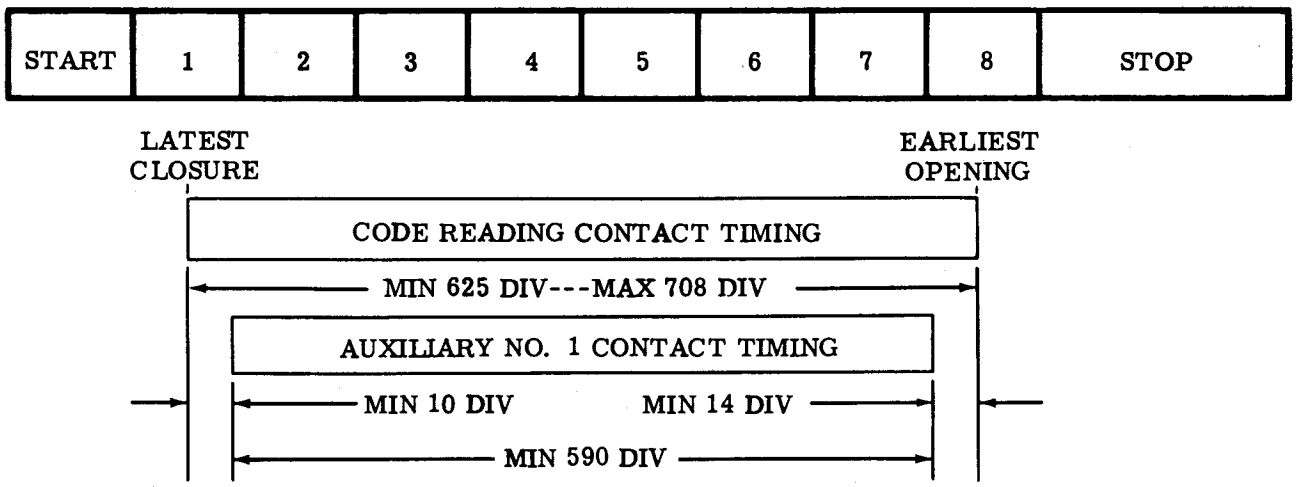

3.14 Auxiliary No. 2 Contact Assembly

Initial Adjustments

(A) BREAK-MAKE CONTACT SPRING

Requirement
Min 4 oz---Max 5 oz
to open normally closed contacts.

To Adjust
Bend break-make contact spring.

(B) MAKE CONTACT STIFFENER

Requirement
Min 0.010 inch---Max 0.020 inch
gap between normally open contacts.

To Adjust
Bend stiffener.

(C) MAKE CONTACT SPRING

Requirement
Min 5-1/2 oz---Max 6 oz
to move make contact spring away
from stiffener.

To Adjust
Bend make contact spring.

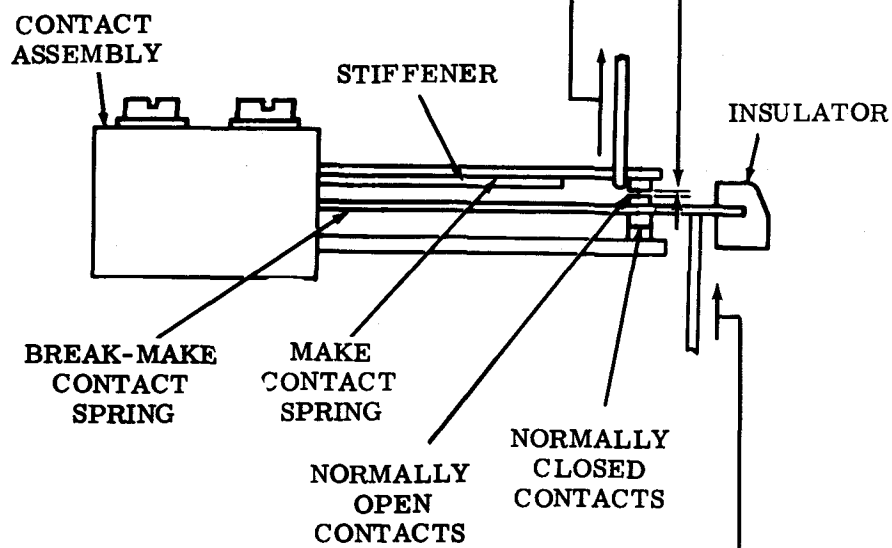

3.15 Auxiliary No. 2 Contact Assembly (continued)

Secondary Adjustments

(A) CONTACT BRACKET

To Check
Disengage and latch clutch.

Requirement
Min 0.015 inch---Max 0.020 inch
clearance between insulator on break-make contact spring and operating surface on cam follower.

To Adjust
Loosen contact mounting bracket screws and position contact assembly using pry point.

(B) CONTACT ASSEMBLY

To Check
Clutch tripped, rotate main shaft until insulator on break-make contact spring is in contact with cam follower.

Requirement
Insulator on break-make contact spring to be centrally located on operating follower extension and contacts of contact springs to be aligned.

To Adjust
Loosen contact assembly mounting screws and position contact springs.

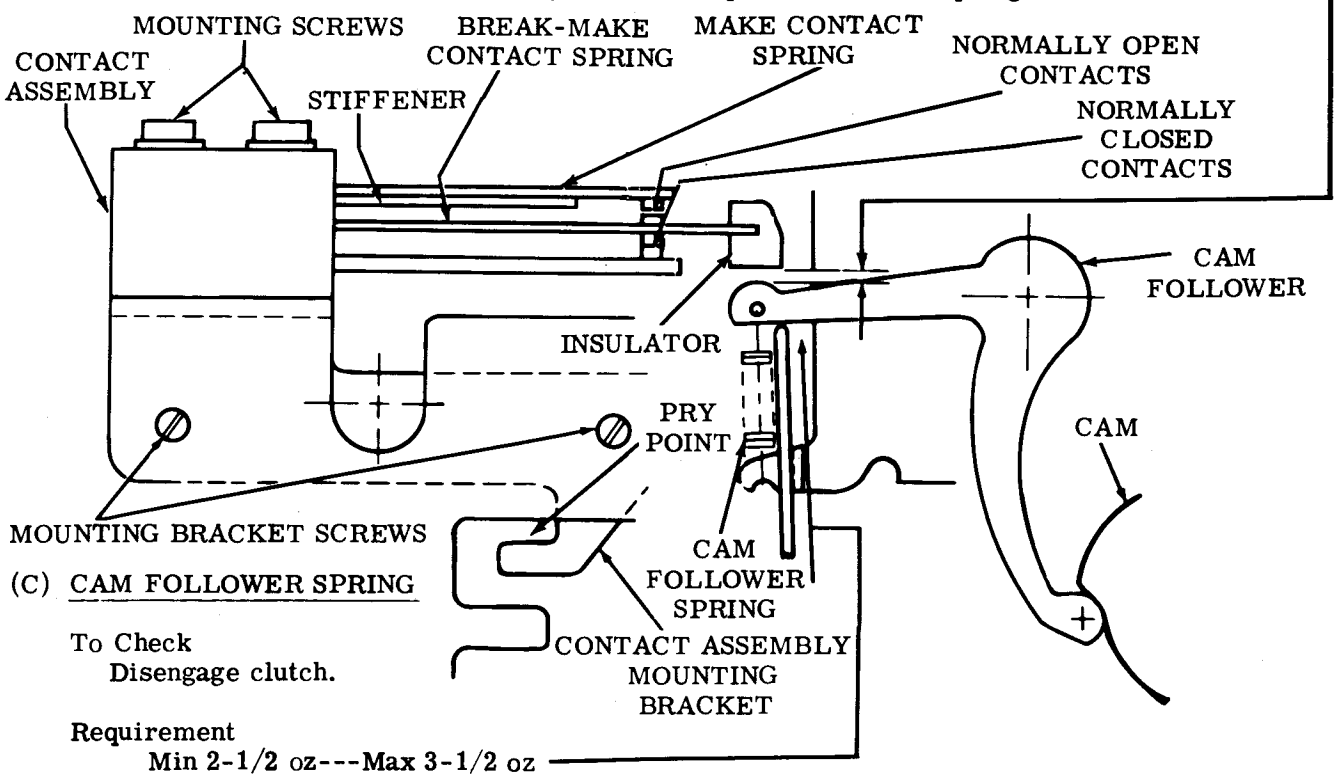

(C) CAM FOLLOWER SPRING

To Check
Disengage clutch.

Requirement
Min 2-1/2 oz---Max 3-1/2 oz
to move cam follower away from cam.

3.16 Auxiliary No. 2 Contact Assembly (continued)

Final Adjustments (Strobing)

CONTACT BRACKET

Note 1: A DXD, if available, operating at 600 opm with an 11 unit code scale should be used for strobing. Disconnect one end of the filter network before strobing contacts.

(1) Requirement
Auxiliary No. 2 contact trace should begin a minimum of 296 divisions after latest code reading contact has closed, have a minimum pulse length of 253 divisions and a maximum of 275 divisions, and end a minimum of 21 divisions before earliest code reading contacts have opened.

(2) Requirement
Trace may have a 2-division break within the first and last 8 scale divisions of the trace.

To Adjust
Loosen the contact mounting bracket screws and position bracket to meet requirements.

Note 2: If the requirement cannot be met, recheck Initial and Secondary Adjustments.

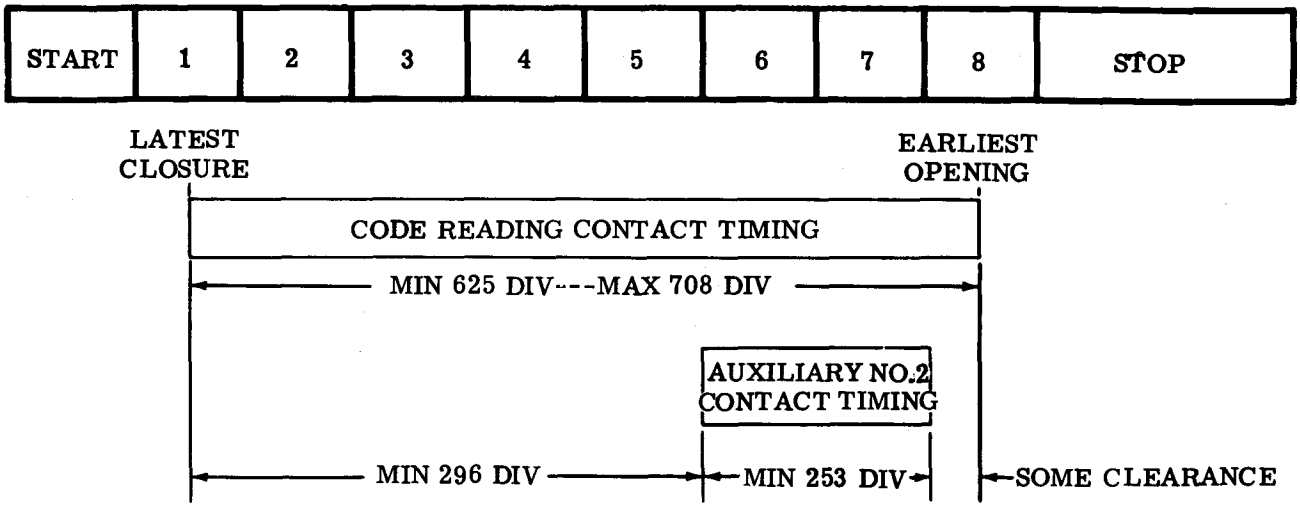

35 CABINET FOR AUTOMATIC SEND-RECEIVE TELETYPEWRITER SET

ADJUSTMENTS

CONTENTS PAGE

1. GENERAL

1.01 This section is reissued to update format and add recent engineering changes. Since this is a general revision, marginal arrows normally used to indicate change have been omitted.

1.02 The adjustments in this section are arranged in a sequence that should be followed if a complete readjustment is undertaken. A complete adjusting procedure should be read before attempting to make the adjustment. After an adjustment is completed, be sure to tighten any nuts or screws that may have been loosened, unless otherwise instructed.

1.03 The adjusting illustrations indicate tolerances, positions of moving parts, spring tensions, and the angle at which scales should be applied. The tools required to make adjustments and check spring tensions are not supplied with the equipment, but are listed in another section. Springs which do not meet the requirements, and for which there are no adjusting procedures, should be discarded and replaced by new springs.

1.04 Where adjustment instructions call for removal of components, assemblies, subassemblies or parts, all adjustments which the removal of the parts might facilitate should be made before the parts are replaced or as the equipment is reassembled. When a part mounted on shims is removed, the number of shims and their location should be noted so that the identical pile-up can be made when the part is replaced.

1.05 References made to left or right, up or down, or front or rear apply to the unit in its normal operating position as viewed from the operator's position in front of the unit.

2. ADJUSTMENT

2.01 Opening and Closing of Cover

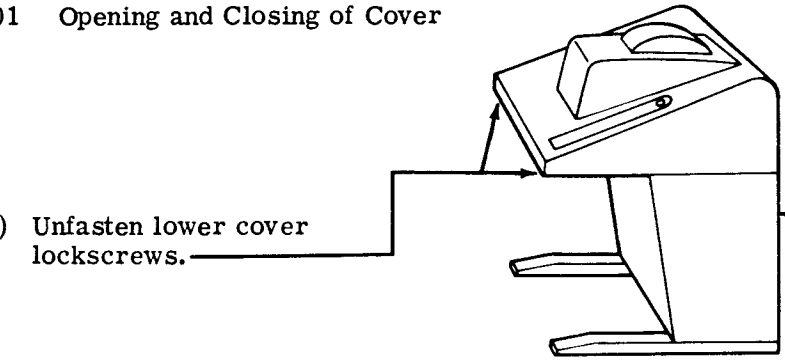

(A) Minimum clearance
13 inches to open cover
3 feet to remove cover

(B) Unfasten lower cover lockscrews.

(C) Remove the bezel mounting screw and remove the call control unit bezel.

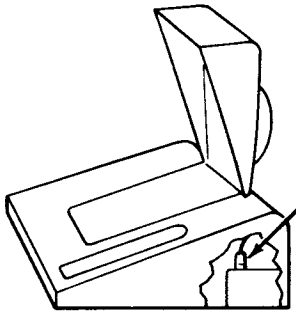

(D) Open the upper cover and disconnect the copylight plug. Temporarily hang the plug by looping it under the copylight cable at the hinge as shown.

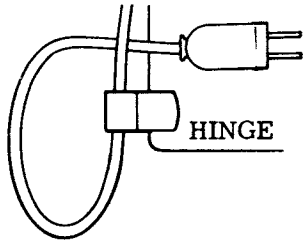

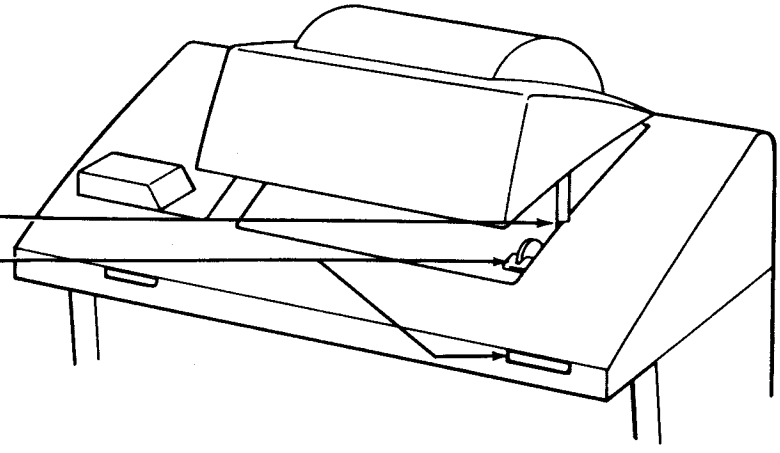

(E) Lower the upper cover to its detent position.

(F) Push on lower cover latch and lift the front of the lower cover with fingers in grips. Raise to vertical lock position.

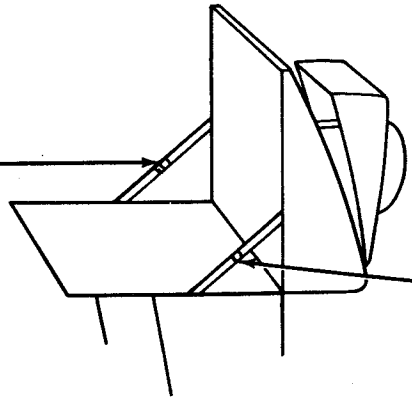

(G) To close cover push here first to unlock left stop arm.

RIGHT STOP ARM (NONLOCKING)

2.02 Opening and closing of Cover (continued)

(A) Follow instructions for opening of cover in Par. 2.01.

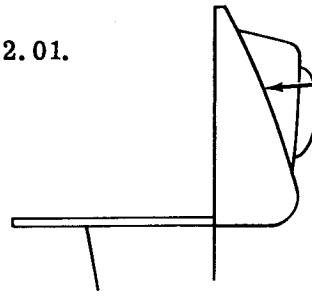

(B) Close upper cover to fully closed latched position.

INSIDE BACK OF COVER IN OPEN POSITION
(VIEW LOOKING STRAIGHT DOWN)

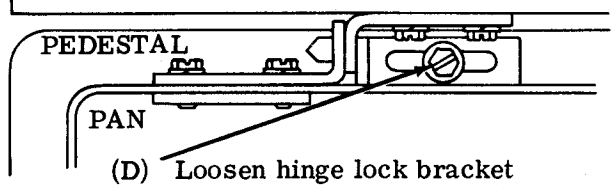

(D) Loosen hinge lock bracket mounting screw and slide bracket away from hinge.

(C) Remove the upper retaining shoulder screw from the right hand stop arm bracket.

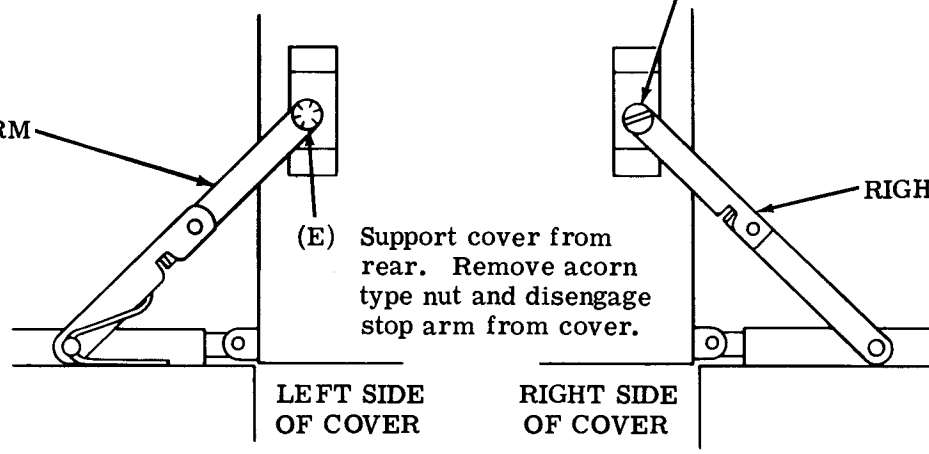

(E) Support cover from rear. Remove acorn type nut and disengage stop arm from cover.

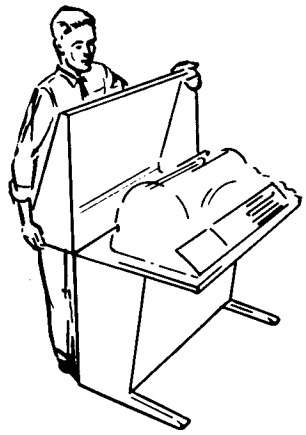

(F) Supporting the cover from the rear, remove by sliding sideways to separate hinges. The cover may be grasped as shown.

Note: Cover weighs approximately 39 pounds.

To replace cover, reverse removal procedure.

2.03 Upper Cover Arrangement

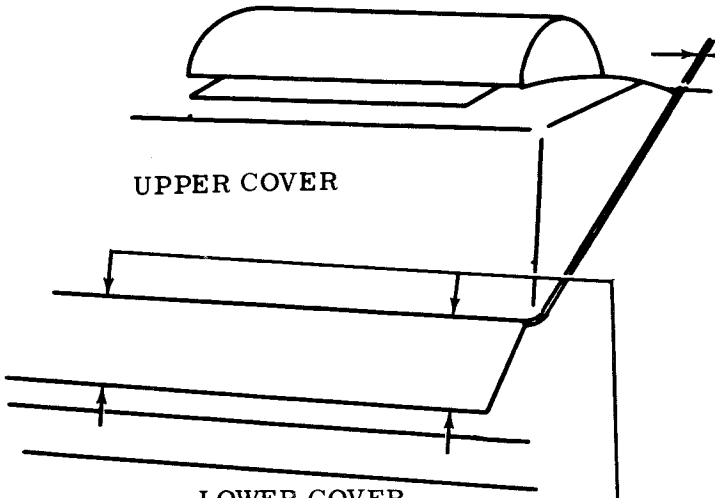

(B) UPPER COVER CLEARANCE (LATCHED)

Requirements

(1) Rubber grommets should be slightly compressed.

(2) There should be no metal-to-metal contact between upper and lower covers.

(3) Clearance between upper cover and lower cover should be 0.090 inch maximum at sides and 0.200 inch maximum at rear.

To Adjust

Position cover with two screws, that mount each hinge to lower cover, loosened.

Note: This adjustment should be made in conjunction with the latch adjustments.

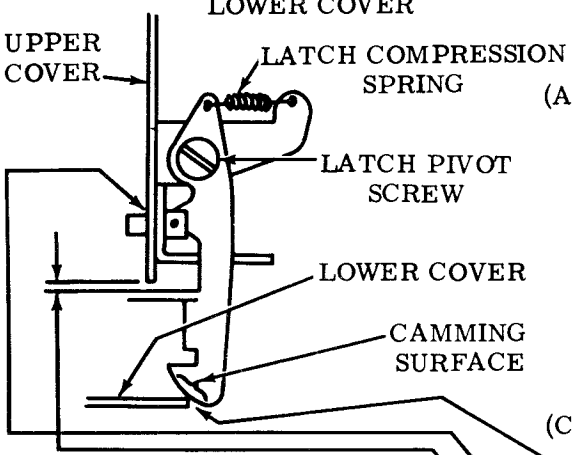

(A) UPPER COVER POSITION (FRONT TO REAR)

Requirement

Clearance between front of upper cover and edge of keyboard opening in lower cover (right and left ends of window depression) should be

Min 4-1/2 inches---Max 4-5/8 inches

To Adjust

Position cover with three screws, at each hinge that mount upper cover, loosened. See figure below.

(C) LATCH

Requirements

(1) Without depressing latch buttons as upper cover is lowered, camming surfaces of latches should contact lower cover.

(2) Latch button should not become disengaged from guide slot in cover when fully depressed.

(3) All requirements of upper cover clearance adjustment should be met. Upper cover should latch closed with slight compression of rubber bumpers and no metal-to-metal contact.

To Adjust

Position both latches with their pivot screws loosened.

(D) COUNTERBALANCE ARM

Requirements

(1) There should be no free fall of upper cover from any position to which it is opened.

(2) There should be some pressure required to close upper cover.

To Adjust

Tighten spring tension adjusting screws.

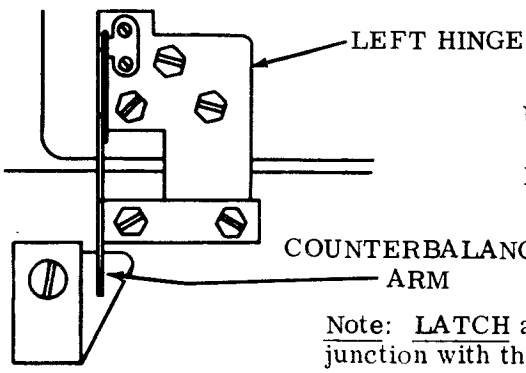

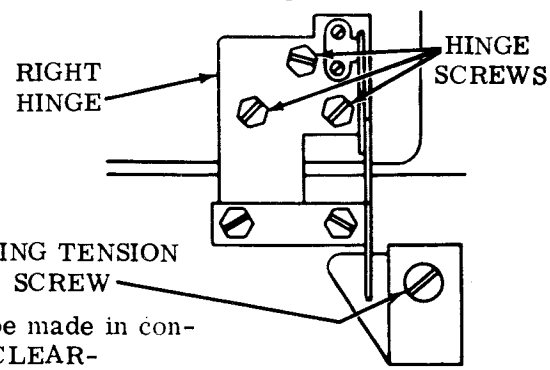

UPPER COVER

LOWER COVER

Note: LATCH adjustment should be made in conjunction with the UPPER COVER CLEARANCE (Par. 2.03).

2.04 Copylight and Line Guide Copyholder

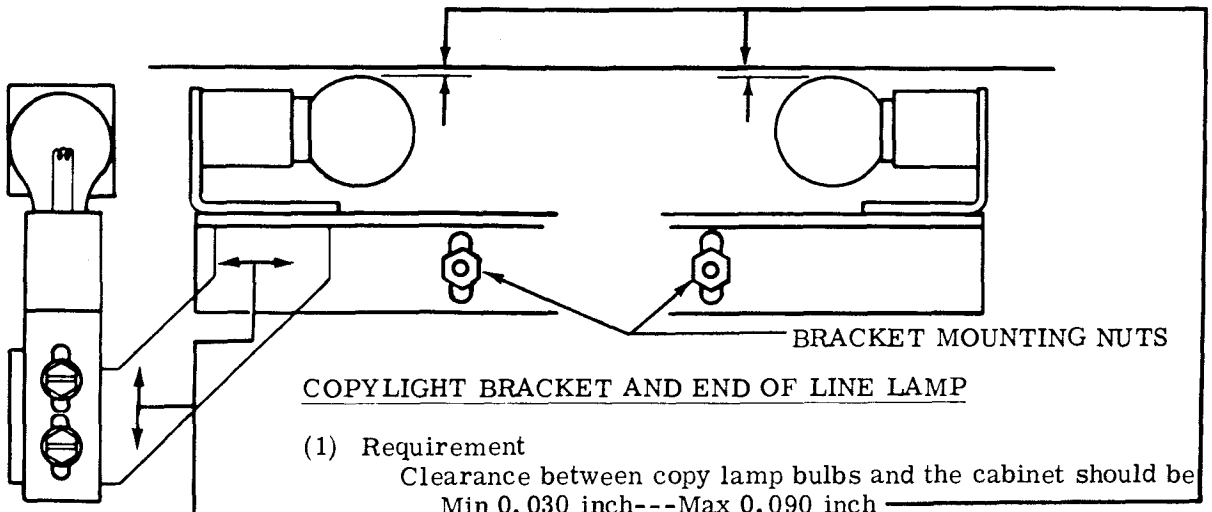

COPYLIGHT BRACKET AND END OF LINE LAMP

(1) Requirement
Clearance between copy lamp bulbs and the cabinet should be Min 0.030 inch---Max 0.090 inch

To Adjust
Loosen the two bracket mounting nuts and position the copy lamp bracket to meet (1) Requirement.

(2) Requirement
Filament of end of line lamp bulb should be centered under red lamp cover.

To Adjust
Loosen the two bracket mounting screws and position the end of line lamp bracket to meet (2) Requirement.

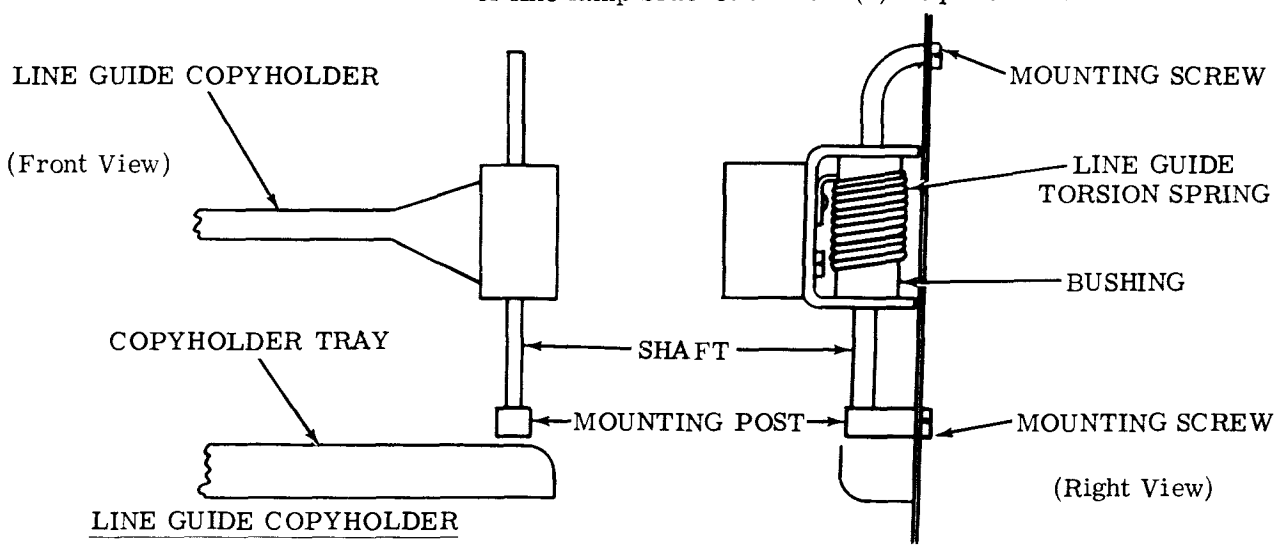

LINE GUIDE COPYHOLDER

Requirement
Tension of line guide copyholder should be just sufficient to hold copy in place and prevent the line guide copyholder from slipping down the shaft.

To Adjust
Remove two shaft mounting screws from inside cover and take off lineguide copyholder. Remove line guide from shaft and rotate bushing in direction to increase or decrease torsion spring tension against line guide. Reassemble line guide and reinstall on cover.

2.05 Bubble and Window Position

Note: Adjustments on this page are preliminary. Final adjustments to be made with typing unit in place.

(C) WINDOW (PRELIMINARY)

(1) Requirement
Clearance between rear edge of window and front edge of paper guide on bubble should be Min 0.045 inch---Max 0.095 inch

(2) Requirement
The gap at both ends of the paper guide should not differ by more than 0.030 inch.

To Adjust
Loosen four screws which mount two window clamps and position window.

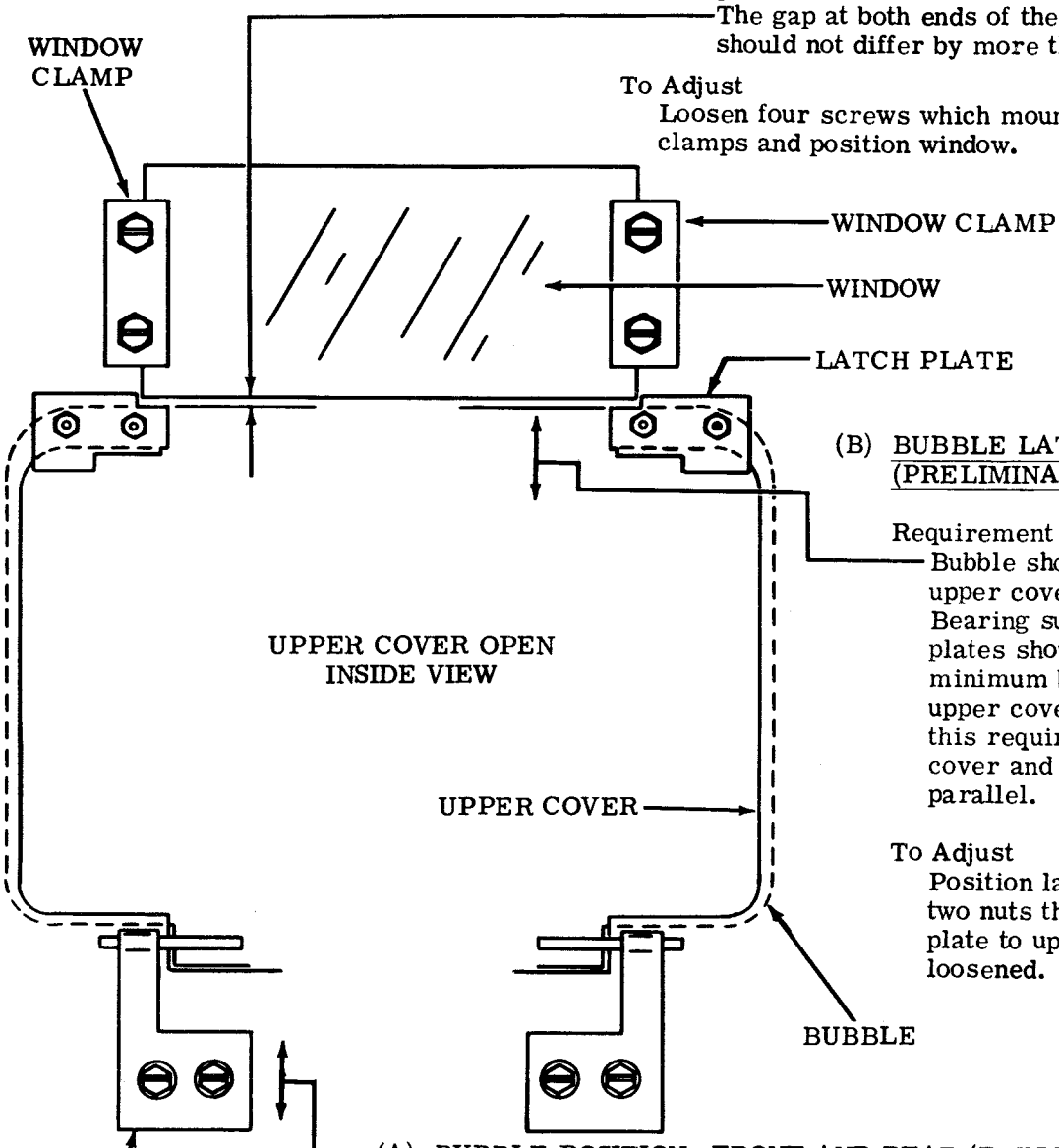

(B) BUBBLE LATCH PLATE (PRELIMINARY)

Requirement
Bubble should not open when upper cover is raised. Bearing surfaces of latch plates should protrude a minimum beyond edge of upper cover consistent with this requirement. Edges of cover and plates should be parallel.

To Adjust
Position latch plates with two nuts that fasten each plate to upper cover loosened.

(A) BUBBLE POSITION, FRONT AND REAR (PRELIMINARY)

Requirement
The bubble should be in the center of its frontmost and rearmost positions.

To Adjust
Loosen two mounting screws that mount each pivot bracket and position bubble, tighten screws.

2.06 Cradle Adjustments (Earlier Design)

(A) CRADLE HEIGHT (PRELIMINARY)

Requirement
Distance from pan to top of cradle at four corners should be 1-3/16 inches.

To Adjust
Loosen four cradle mounting screws. Turn adjustment bushing from beneath cabinet through access holes. Tighten cradle mounting screws.

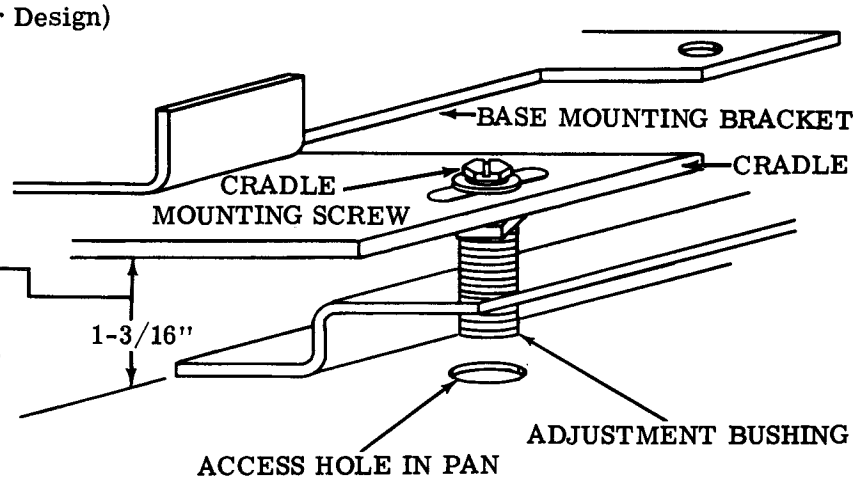

(B) CRADLE HEIGHT (FINAL)

Note: Make this adjustment with motor and typing unit in place.

(1) Requirement
Clearance between top of keylever guideplate and upper edge of the cover should be
Min 0.047 inch---Max 0.090 inch

(2) Requirement
Top of base at rear corners should be 3 inches above pan.

To Adjust
Refine adjustment (A) CRADLE HEIGHT (PRELIMINARY) above.

(C) CRADLE FRONT TO REAR

Note: Make this adjustment with motor and typing unit in place.

(1) Requirement
Clearance between cover and front edge of keyboard should be
Min 0.060 inch---Max 0.090 inch

(2) Requirement
Clearance between top front edge of keylever guideplate and upper surface of cover should be
Min 0.047 inch---Max 0.090 inch

To Adjust
With cradle mounting screws loosened, move cradle from front to rear until requirements are met. Refine cradle height if necessary. Tighten screws.

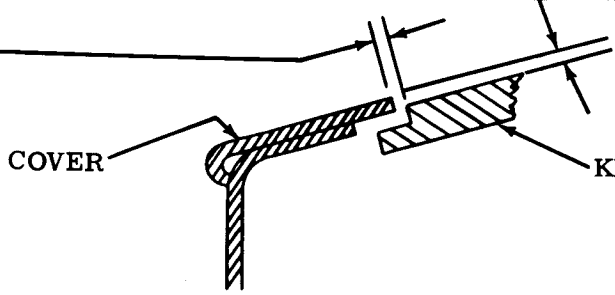

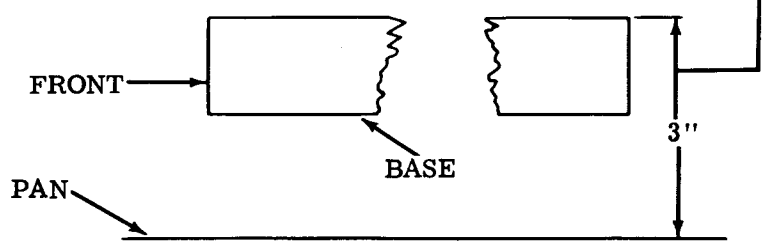

2.07 Cradle Adjustments (Later Design)

(A) CRADLE HEIGHT (PRELIMINARY)

Requirement
Distance from pan to top of cradle at four corners should be 1-3/16 inches.

To Adjust
Loosen four cradle mounting screws. Turn adjustment bushings from beneath cabinet through access holes. Tighten cradle mounting screws.

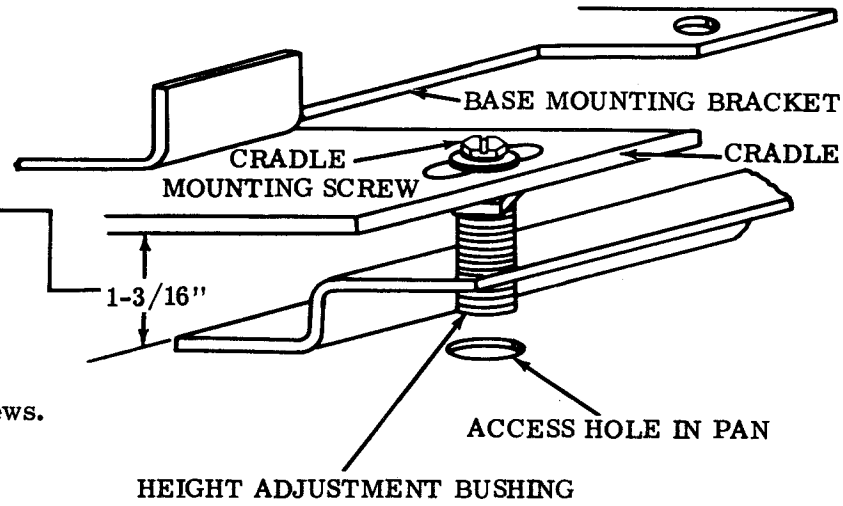

(B) CRADLE HEIGHT (FINAL)

Requirement
Motor and typing unit in place. Distance from pan to top of base at four corners should be
Min 2-15/16 inch---Max 3-1/16 inch

To Adjust
Loosen four cradle mounting screws. Turn adjustment bushings from beneath cabinet through access hole until requirement is met.

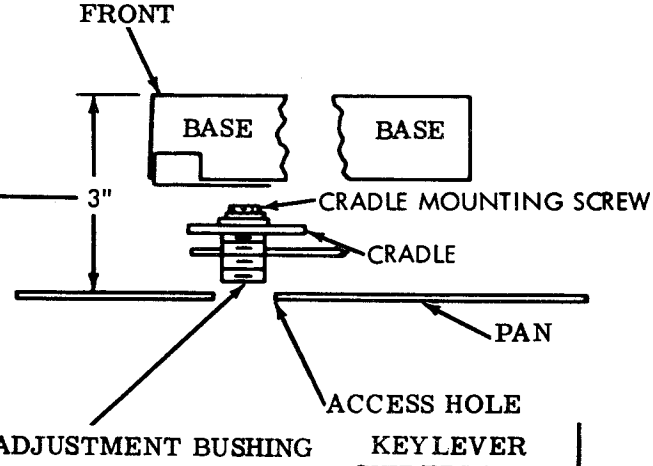

(C) CRADLE FRONT TO REAR

Requirement
Clearance between cover and front edge of keyboard should be 1/16 inch.

To Adjust
Move cradle to front or rear until requirement is met. Tighten cradle mounting screws.

(D) FRONT HEIGHT OF LOWER COVER

Requirement
Clearance between upper edge of cover and top edge of keylever guideplate should be
Min 0.047 inch---Max 0.090 inch

To Adjust
Loosen locknut on height adjustment screw. Turn screw until requirement is met. Tighten locknut.

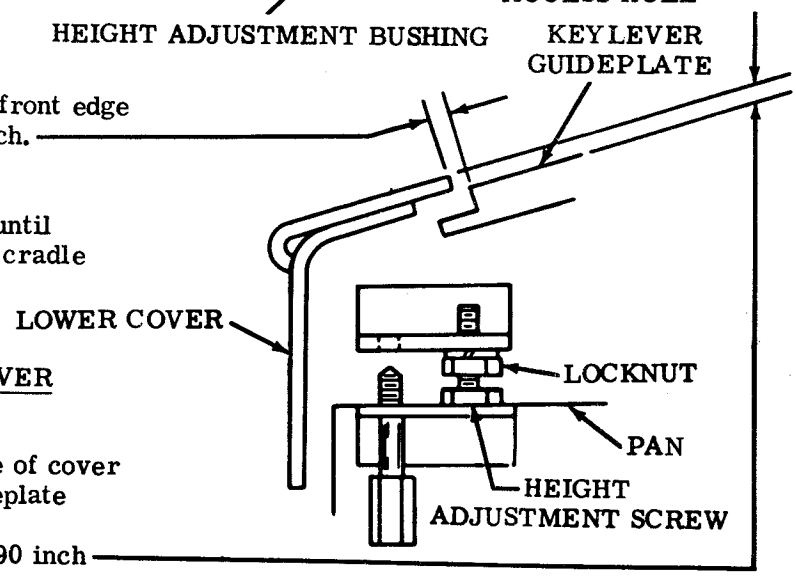

Note: This adjustment should be made in conjunction with the CRADLE FRONT TO REAR (Par. 2.07).

2.08 Control Panel

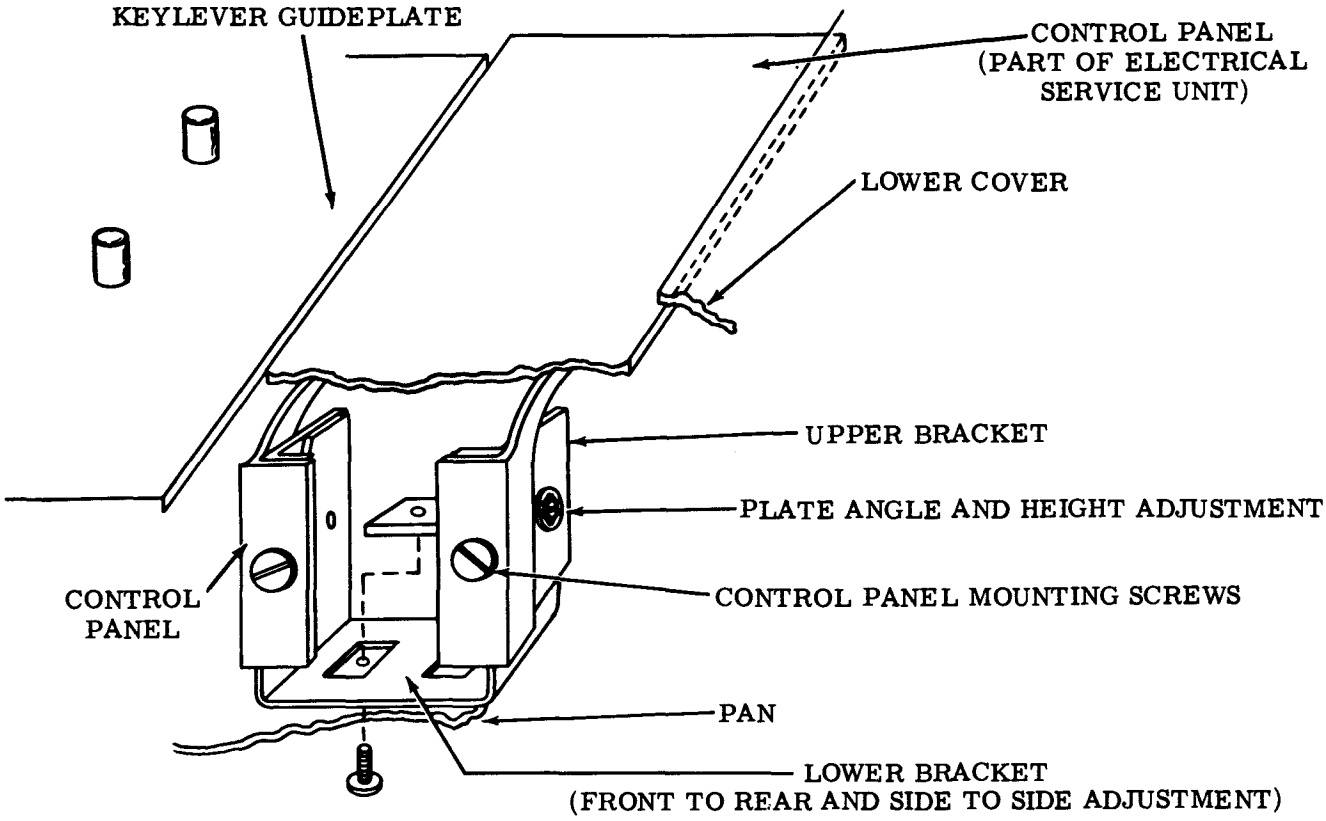

Note: Adjustments on this page may be disturbed by jarring the cabinet or base. Before making adjustment, seat keyboard base firmly on centers of rubber mounts.

CONTROL PANEL

(1) Requirement
Clearance between control panel tops and under surface of lower cover should be
Min panels may be touched but not moved in excess of 0.015 inch
by lower cover---Max 0.060 inch

(2) Requirement
Clearance between keylever guideplate and adjacent control panels should be
Min 0.060 inch---Max 0.090 inch

To Adjust (Earlier Design)
Loosen lower bracket mounting screws to friction tight and position brackets from left to right and front to rear. Loosen upper bracket mounting screws and adjust height and angle of control panels. Tighten screws. Make certain that cover rests on its support surfaces and not on control panels. Refine cradle height adjustment if necessary until top of keylever guideplate is flush with top control panels.

To Adjust (Later Design)
Loosen lower bracket mounting screws to friction tight and position brackets from left to right and front to rear. Loosen upper bracket mounting screws to friction tight and raise brackets to uppermost position. Lower the cover to push control panels down to proper positions. Raise cover and tighten mounting screws.

2.09 Paper and Form Guides

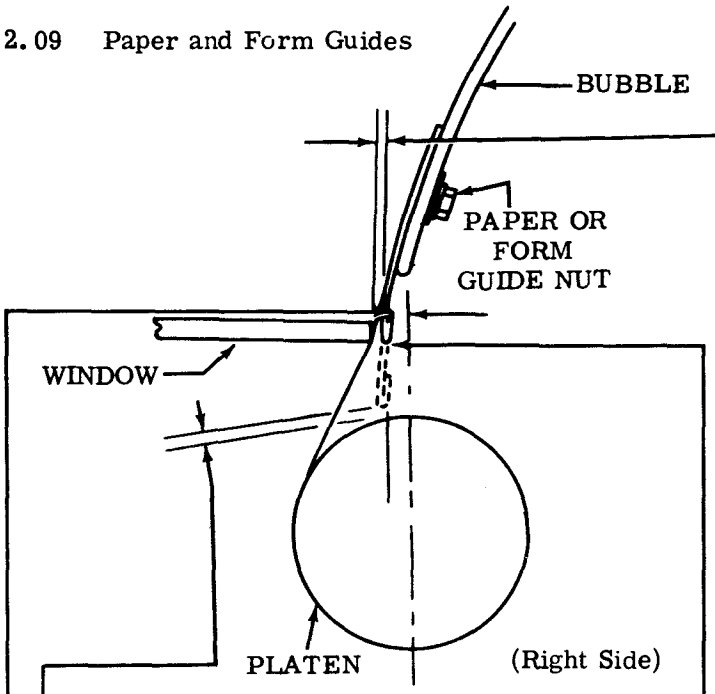

(C) PAPER AND FORM GUIDE

(1) Requirement - Friction Feed Paper Guide
Bottom edge of paper guide should be flush with bottom surface of window.

(2) Requirement - Sprocket Feed Form Guide
Clearance between form guide and platen should be
Min 3/64 inch---
Max 5/64 inch

To Adjust
Position guide with three paper or form guide nuts loosened. Tighten nuts.

(D) WINDOW (FINAL)

(1) Requirement - Friction Feed Paper Guide
Clearance between edge of window and paper guide should be
Min 0.045 inch---
Max 0.095 inch

(2) Requirement
Clearance should not differ at each end of paper guide by more than 0.030 inch

To Adjust
Loosen four screws that fasten window clamps (see Par. 2.05) and position window. Tighten screws.

(1) Requirement - Sprocket Feed Form Guide
Clearance between edge of window and form guide should be
Min 0.045 inch---
Max 0.095 inch

(2) Requirement
Clearance should not differ at each end of paper guide by more than 0.030 inch. If stapled stationery is used, clearance should be increased to allow four or more copies to pass freely through paper emission slot.

To Adjust
Same as friction feed To Adjust.

(A) BUBBLE POSITION FRONT AND REAR (FINAL)

Requirement
Front edge of paper or form guide should be about 1/4 inch in front of approximate center of platen. Form guide and bubble should clear all typing unit parts by at least 1/8 inch.

To Adjust
Loosen four mounting screws that mount bubble pivot brackets and position bubble (see Par. 2.05). Tighten screws.

(B) BUBBLE LATCH PLATE (FINAL)

Refine BUBBLE LATCH PLATE (PRELIMINARY) (Par. 2.05) if necessary.

2.10 Call Control Unit
Apparatus Mounting Rack

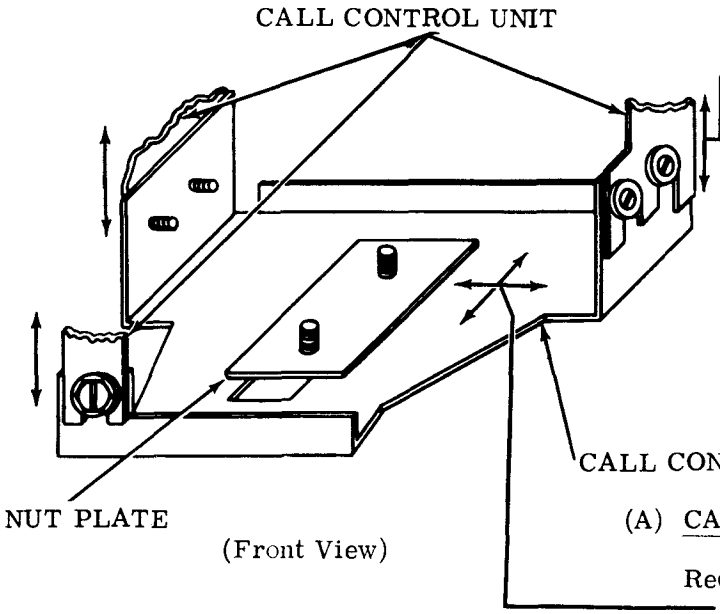

(B) CALL CONTROL UNIT HEIGHT

Requirement
Enlarged bases of six pushbuttons on call control unit should protrude an equal amount through bezel. Call control lights should protrude through bezel equal amounts.

To Adjust
Loosen five screws that mount front part of call control unit to adjustable bracket on pan and adjust height of front part of call control unit.

CALL CONTROL UNIT MOUNTING BRACKET

(A) CALL CONTROL UNIT MOUNTING BRACKET

Requirement
Pushbuttons and lights on call control unit should be centered in their respective openings in bezel.

To Adjust
Loosen two screws that fasten front call control bracket and position the bracket. Tighten screws.

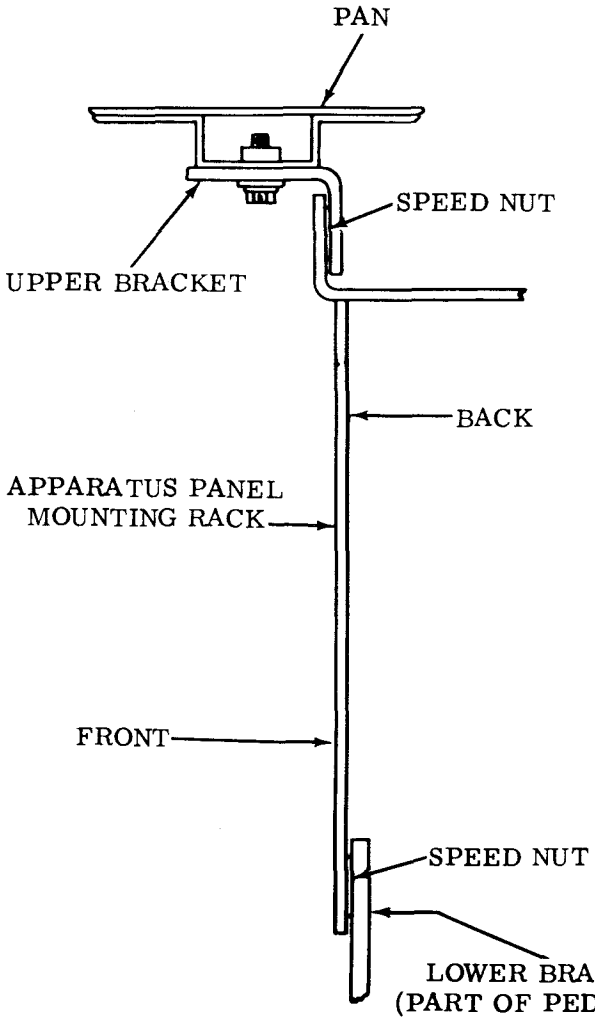

(C) UPPER APPARATUS MOUNTING RACK BRACKET (Floor Standing Cabinets Only)

Requirement
Speed nut on upper rack bracket should touch back of apparatus mounting racks when bottom of rack is touching two lower brackets with pedestal and racks resting on floor.

To Adjust
Loosen bracket mounting screws and position the bracket. Tighten screws.

CLEANING CABINETS

A soft dry cloth should be used to remove dust, oil or grease from the cabinet. If necessary, a soft damp cloth and mild soap may be used. Rinse cabinet with damp cloth and buff with a dry cloth.

CAUTION: DO NOT USE ALCOHOL, MINERAL SPIRITS OR OTHER SOLVENTS FOR CLEANING THE CABINET.

2.11 Transmitter Cover and Control Panel

(A) COVER

(1) Requirement
Clearance between paper fence and transmitter should be
Min 0.062 inch---Max 0.156 inch

(2) Requirement
Clearance as measured at both ends should not differ by more than 0.047 inch.

To Adjust
Loosen two paper tray mounting screws and position fence until requirement is met.

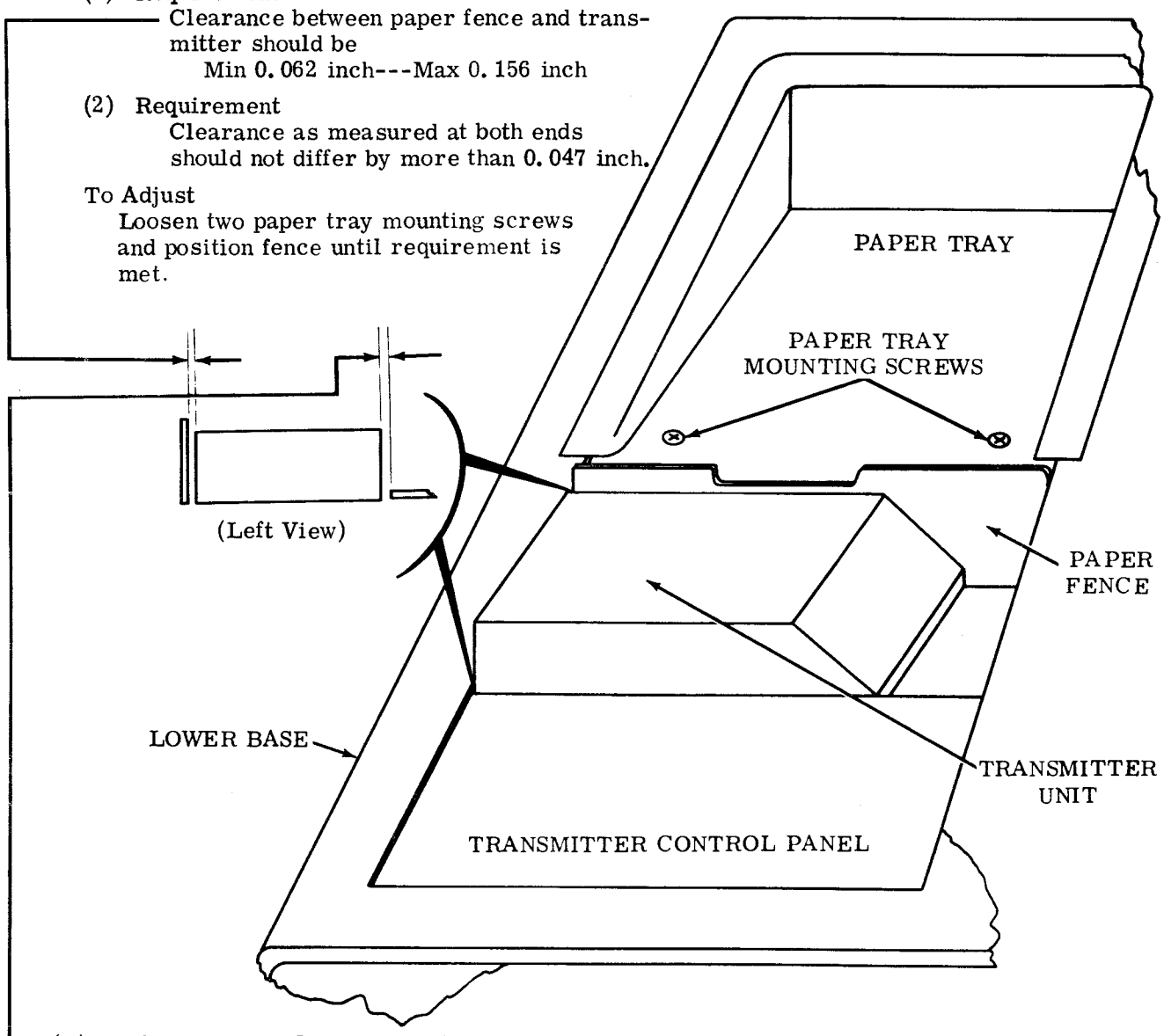

(B) TRANSMITTER CONTROL PANEL

(1) Requirement
Clearance between transmitter control panel and transmitter unit should be 0.062 inch.

(2) Requirement
Clearance as measured at both ends should not differ by more than 0.047 inch. The panel should just touch the under surface of the lower cover. The cover should not rest on the panel.

(3) Requirement
Clearance between control panel top and under surface of lower cover should be
Min panel may touch but not moved in excess of 0.015 inch by lower cover---
Max 0.060 inch.

To Adjust
See CONTROL PANEL (Par. 2.08) for instructions.

12 Tape Chute

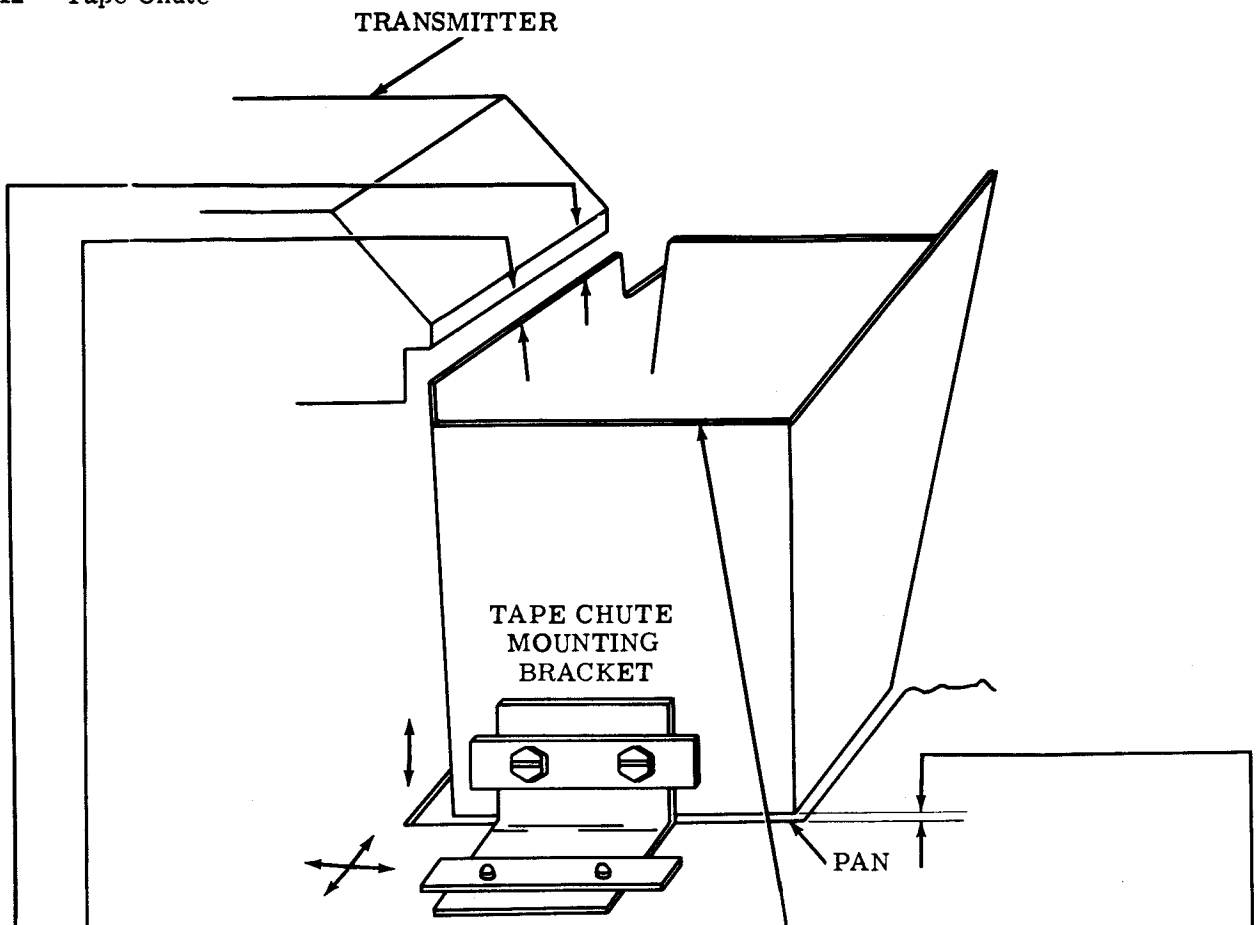

TAPE CHUTE

(1) Requirement
Right surface of left side of tape chute should be flush with right edge of transmitter.

(2) Requirement
Rear surface of front side of tape chute should be flush with rear edge of transmitter control panel.

(3) Requirement
Top of left surface of chute should clear transmitter by a minimum of 1/8 inch.

(4) Requirement
There should be some clearance between the bottom of the tape chute and the pan.

To Adjust
Loosen the two screws which fasten the tape chute mounting bracket to the pan and adjust horizontally. Tighten screws. Loosen the two screws which fasten the tape chute to the bracket and adjust vertically. Tighten screws.

2.13 Tape Tearing Edge

TAPE TEARING EDGE

(1) Requirement
Tape tearing edge should be approximately 1/16 inch above tape as it emerges from perforator.

(2) Requirement
Tape tearing edge should not interfere with the end of tape coming from perforator and permit tearing tape with straight edge.

To Adjust
With mounting nuts loose, position tape tearing edge until requirements are met.

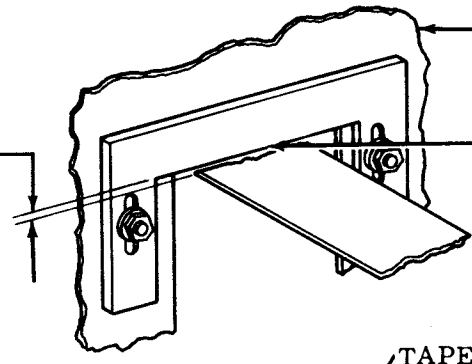

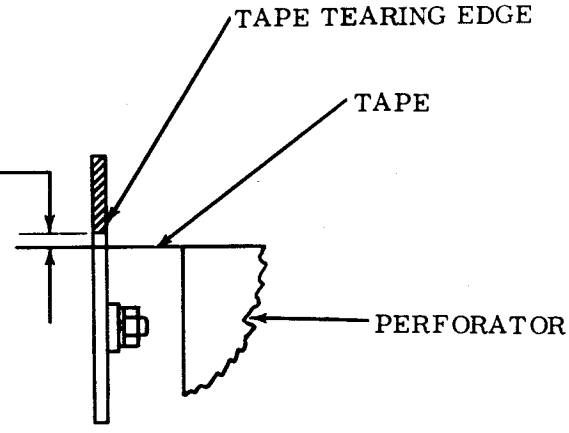

2.14 Lower Cover Latch (Later Design Only)

LOWER COVER LATCH

(1) Requirement
Latching surfaces should be parallel as judged by eye.

(2) Requirement
Clearance between lower cover latch and latching surface should be
Min some---Max 0.060 inch

To Adjust
Loosen bracket mounting screws and latch mounting nut and make them friction tight. Position latch and bracket until requirements are met. Tighten mounting nut and mounting screws.

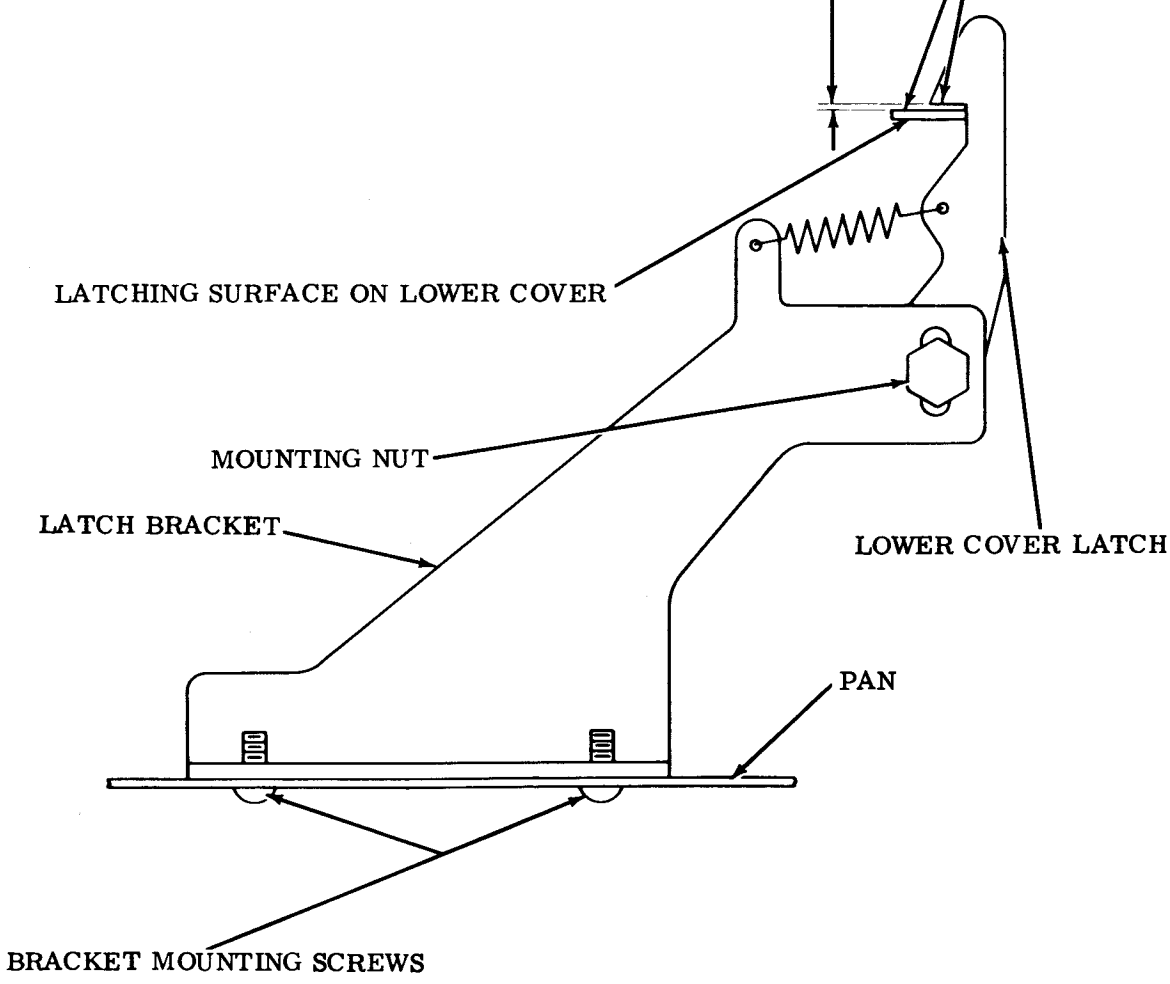

2.15 Lower Panel Pivot Post

LOWER PANEL PIVOT POST

(1) Requirement
Maximum endplay of lower compartment panel on its pivot post should be 0.030 inch.

(2) Requirement
Clearance at sides of lower compartment panel with endplay taken up in one direction should not differ by more than 0.045 inch.

To Adjust
Lower panel until engaged with the pivot posts. Loosen locknuts. Position pivot posts until requirements are met. Tighten locknuts.

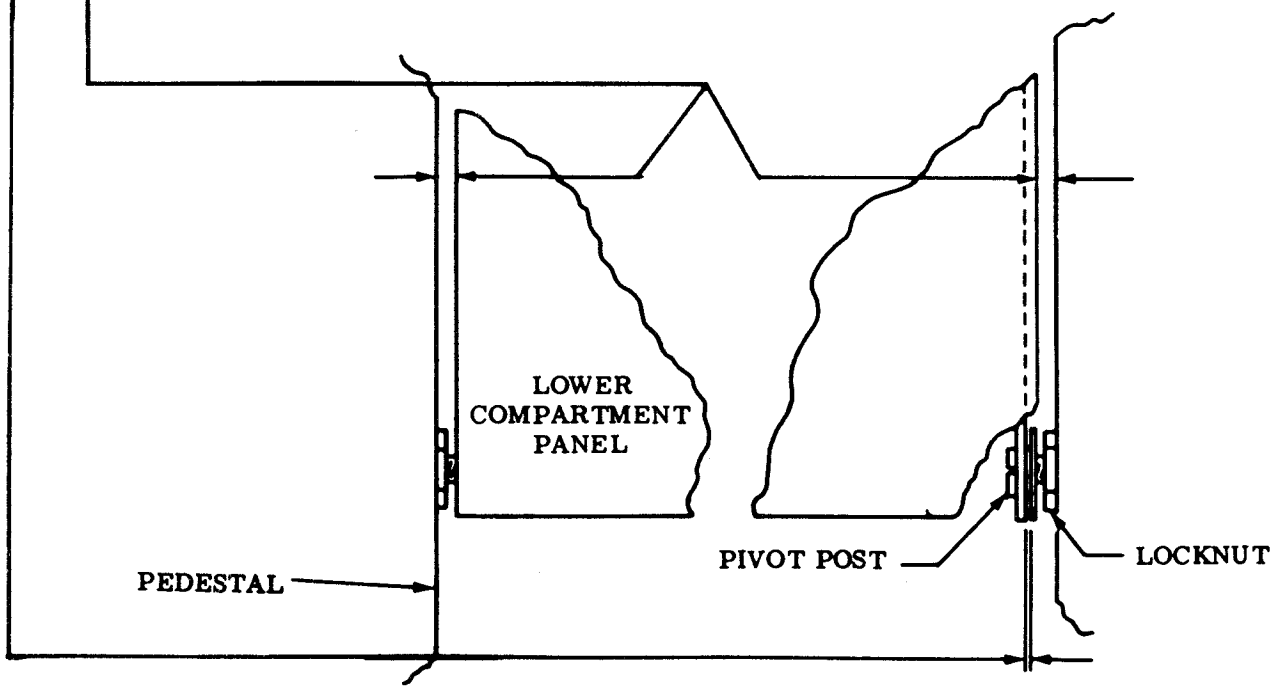

35 REPERFORATOR BASES

ADJUSTMENTS

CONTENTS PAGE

1. GENERAL

1.01 This section provides adjustment information for the 35 receiving-only reperforator base, the 35 multiple reperforator base, and the 35 auxiliary reperforator base.

1.02 The adjustments in this section are arranged in a sequence that should be followed if a complete readjustment is undertaken. A complete adjusting procedure should be read before attempting to make the adjustment. After an adjustment is completed, be sure to tighten any nuts or screws that may have been loosened, unless otherwise instructed.

1.03 The adjusting illustrations indicate tolerances, positions of moving parts, spring tensions and the angle at which scales should be applied. The tools required to make adjustments and check spring tensions are not supplied with the equipment, but are listed in another section. Springs which do not meet the requirements, and for which there are no adjusting procedures, should be discarded and replaced by new springs.

1.04 Where adjustment instructions call for removal of components, assemblies, subassemblies or parts, all adjustments which the removal of the parts might facilitate should be made before the parts are replaced or as the equipment is reassembled. When a part mounted on shims is removed, the number of shims and their location should be noted so that the identical pile-up can be made when the part is replaced.

1.05 References made to left or right, up or down, front or rear apply to the unit in its normal operating position as viewed from the operator's position in front of the unit.

2. RECEIVING-ONLY REPERFORATOR BASE

2.01 Tape Container and Timing Belt

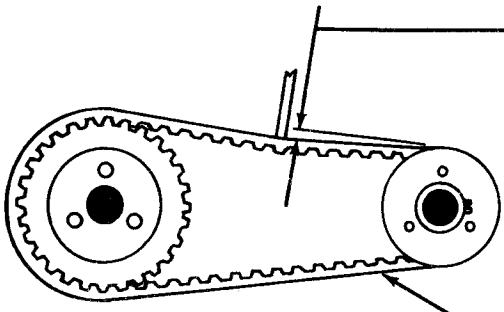

(RIGHT SIDE VIEW)

TIMING BELT

Requirement
Slight pressure at center of span (8 ± 1 oz) should deflect belt
Min 1/16 inch---Max 3/16 inch

CAUTION: BELT SHOULD NOT BE TIGHT.

To Adjust
With mounting screws loosened, move intermediate drive assembly toward or away from reperforator. Tighten screws. Recheck GEAR MESH.

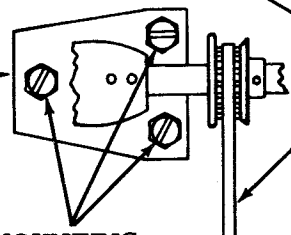

INTERMEDIATE DRIVE ASSEMBLY

MOUNTING SCREWS

TIMING BELT

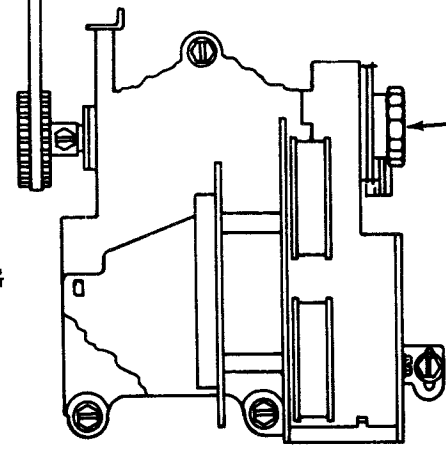

REPERFORATOR UNIT

(TOP VIEW)

MOUNTING SCREWS

TAPE CONTAINER MOUNTING BRACKET

TAPE CONTAINER

Requirement
Possible to insert full roll of tape into tape container through access door in dome.

To Adjust
Position tape container with two mounting screws loosened.

2.02 Intermediate Gears and Tight Tape Arm

GEAR MESH

Requirement
Motor drive gear and intermediate shaft driven gear should mesh at right angles.

To Adjust
Position drive assembly with mounting screws loosened. Recheck TIMING BELT adjustment (2.01).

WIRE TAPE GUIDE

Requirement
Tape should pass freely through wire guide and be aligned with perforator guide assembly.

To Adjust
Bend or position wire guide.

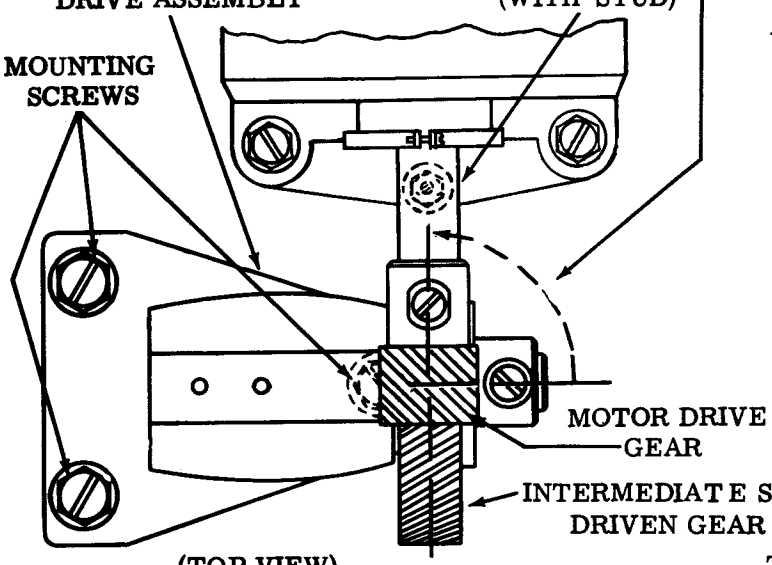

(TOP VIEW)

MOTOR ADJUSTING STUD

Requirement
Barely perceptible backlash between motor drive gear and intermediate shaft driven gear with gears at closest point.

To Adjust
Position stud in right motor mounting post up or down to meet requirement. Tighten nut while holding stud in position. Check that motor mounting screws are tight. Recheck GEAR MESH.

TIGHT-TAPE ARM

Requirement
With latchlever against its forward (clockwise) stop, tight-tape arm should clear table
Min 1/2 inch---Max 3/4 inch

To Adjust
With adjusting screw on trip lever loosened and trip lever holding latchlever against clockwise stop, position tight tape arm.

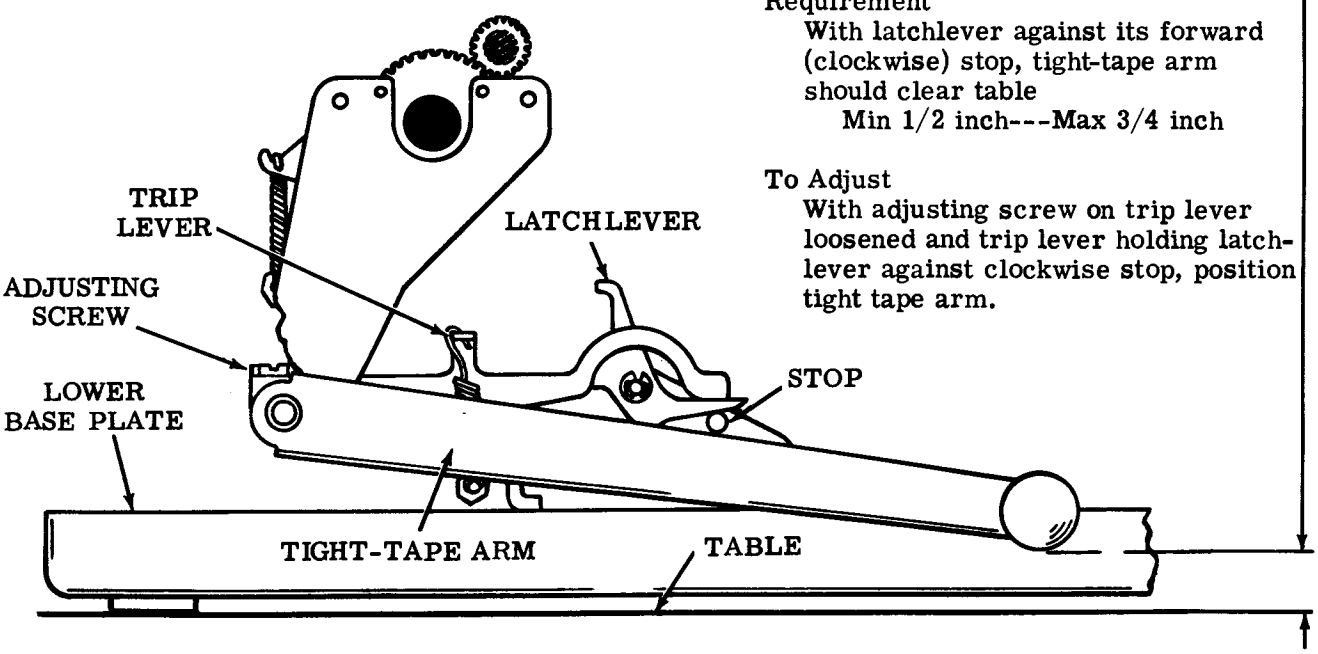

2.03 Low Tape Mechanism

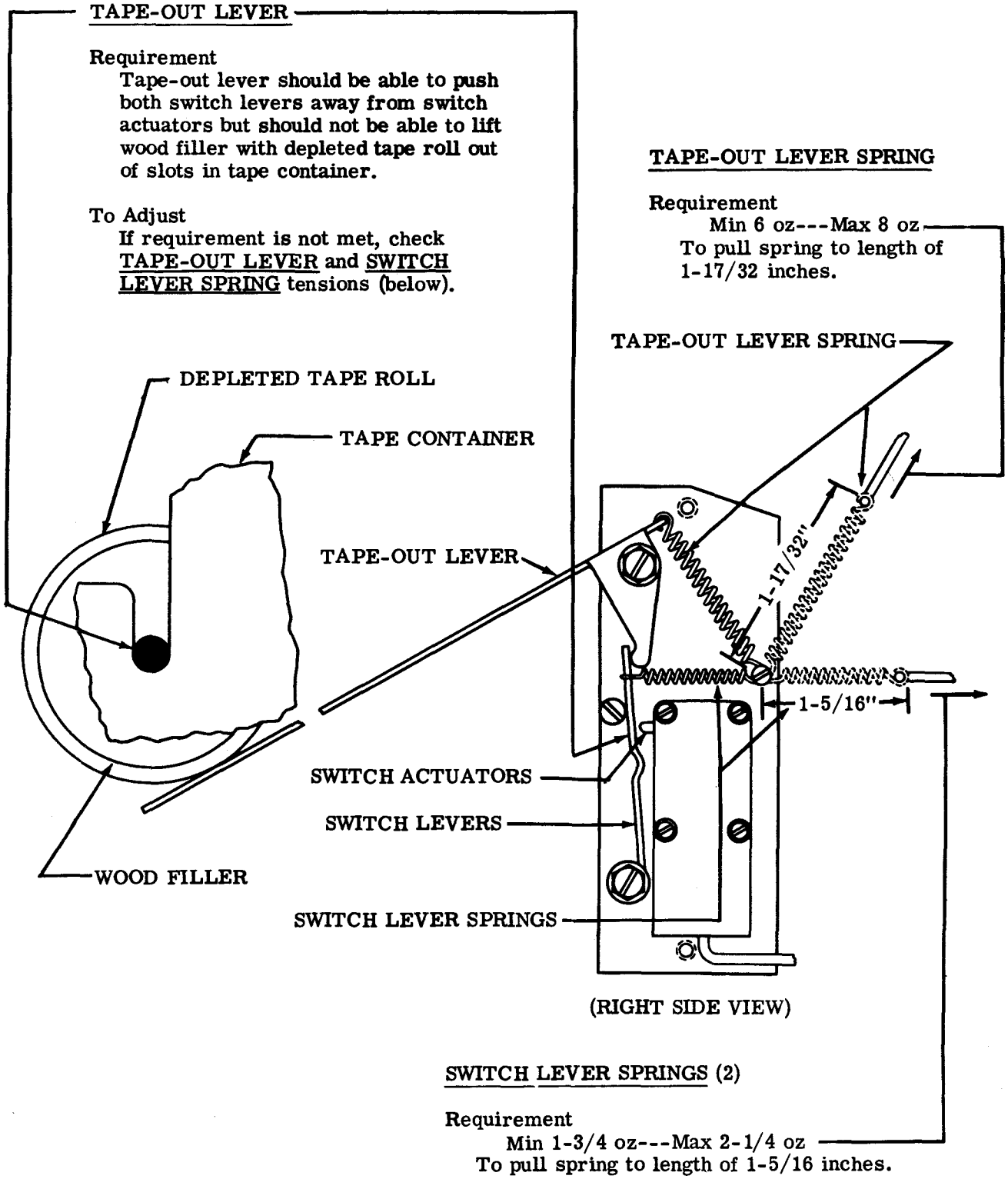

2.04 Low Tape Mechanism - Continued

Note: The inner switch is nearest the mounting plate; the outer switch is farthest from the mounting plate.

(RIGHT SIDE VIEW)

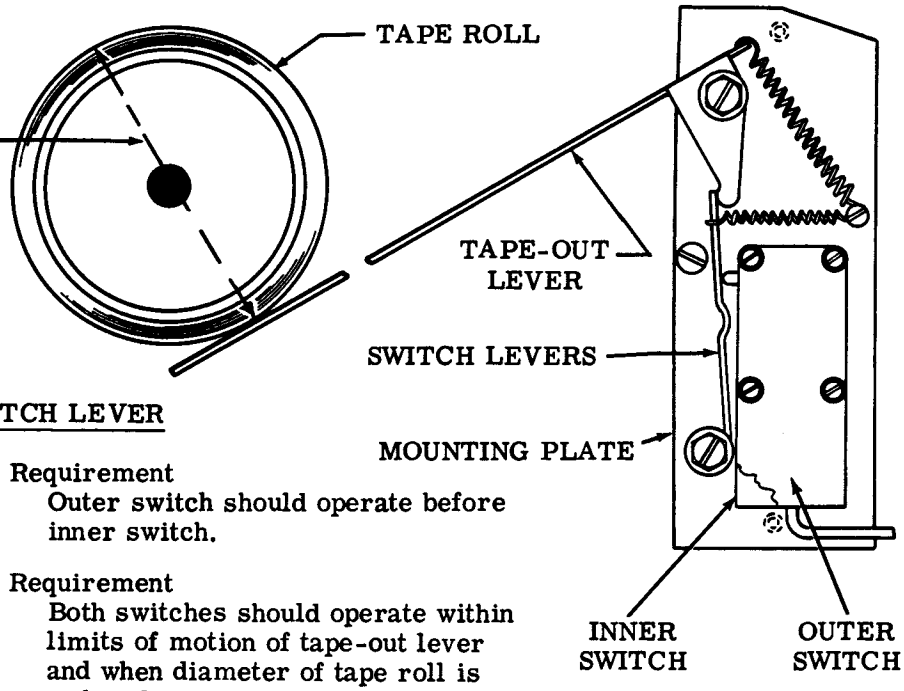

(A) SWITCH LEVER

(1) Requirement
Outer switch should operate before inner switch.

(2) Requirement
Both switches should operate within limits of motion of tape-out lever and when diameter of tape roll is reduced to first, 2-7/16 inches, then to 2-5/16 inches (when using a 2-inch diameter core).

To Adjust
Bend outer switch lever toward switch assembly.

Note: Adjustment can be facilitated by removing switch mechanism from tape container.

(B) SWITCH MECHANISM MOUNTING PLATE

Requirement
Outer switch should just operate when diameter of tape roll is reduced to 2-3/8 inches when using a 2-inch diameter core.

To Adjust
Position mounting plate with mounting screws loosened.

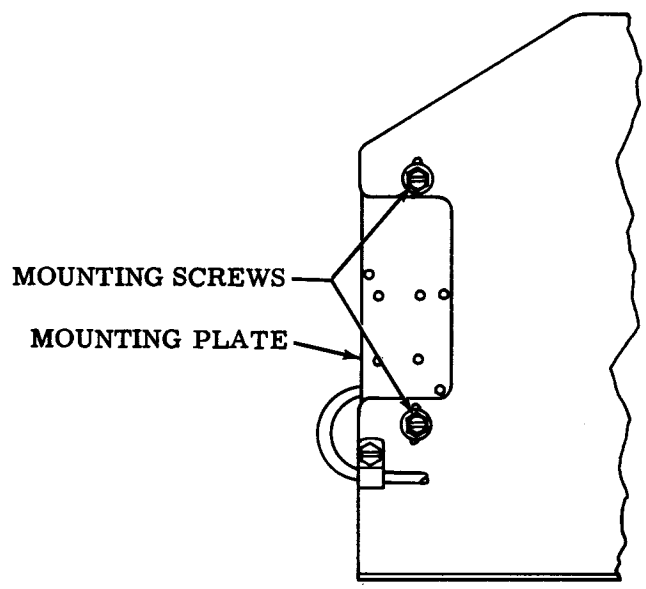

(LEFT SIDE VIEW)

3. AUXILIARY REPERFORATOR BASE

3.01 Gear Bracket Assembly and Motor Mounting

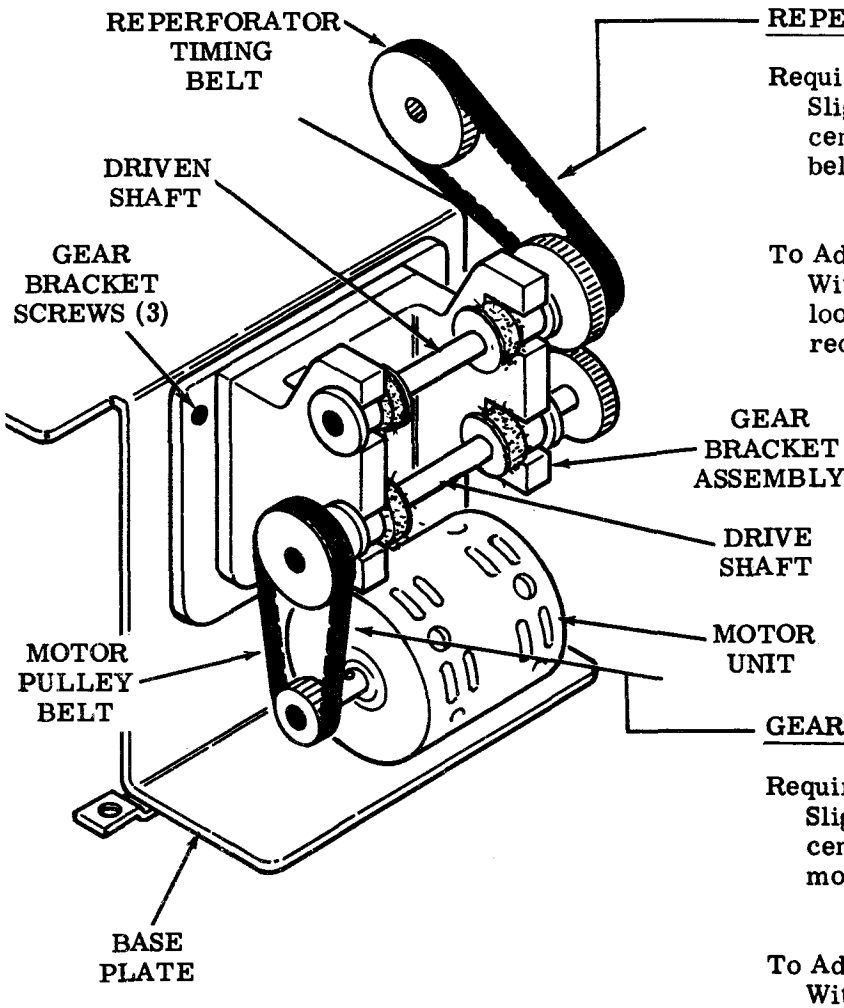

REPERFORATOR TIMING BELT

Requirement
Slight pressure (up to 2 oz) at center of span should deflect belt
Min 1/16 inch---Max 1/8 inch

To Adjust
With reperforator mounting screws loosened, position unit to meet requirement.

GEAR BRACKET

Requirement
Slight pressure (2 oz to 4 oz) at center of span should deflect motor pulley belt
Min 1/16 inch---Max 1/8 inch

To Adjust
With gear bracket screws loosened position gear bracket assembly upward to meet requirement.

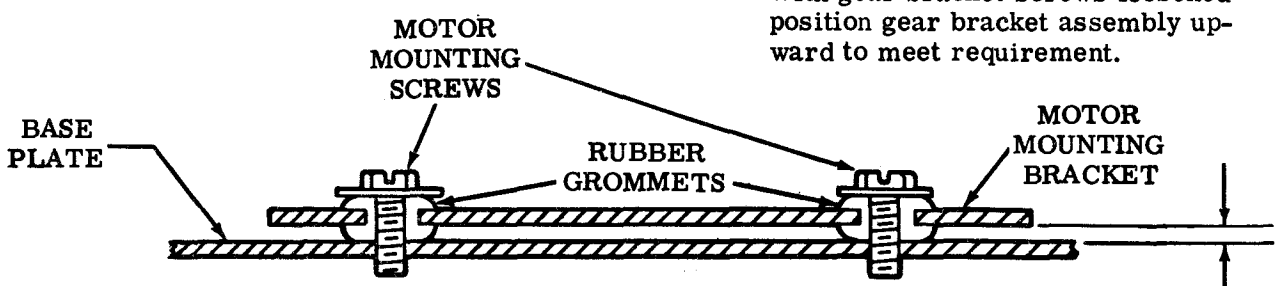

MOTOR MOUNTING

Requirement
Motor mounting bracket should be spaced
Min 0.030 inch---Max 0.060 inch
from base plate.

To Adjust
Tighten or loosen motor mounting screws to meet requirement.

3.02 Low Tape Mechanism

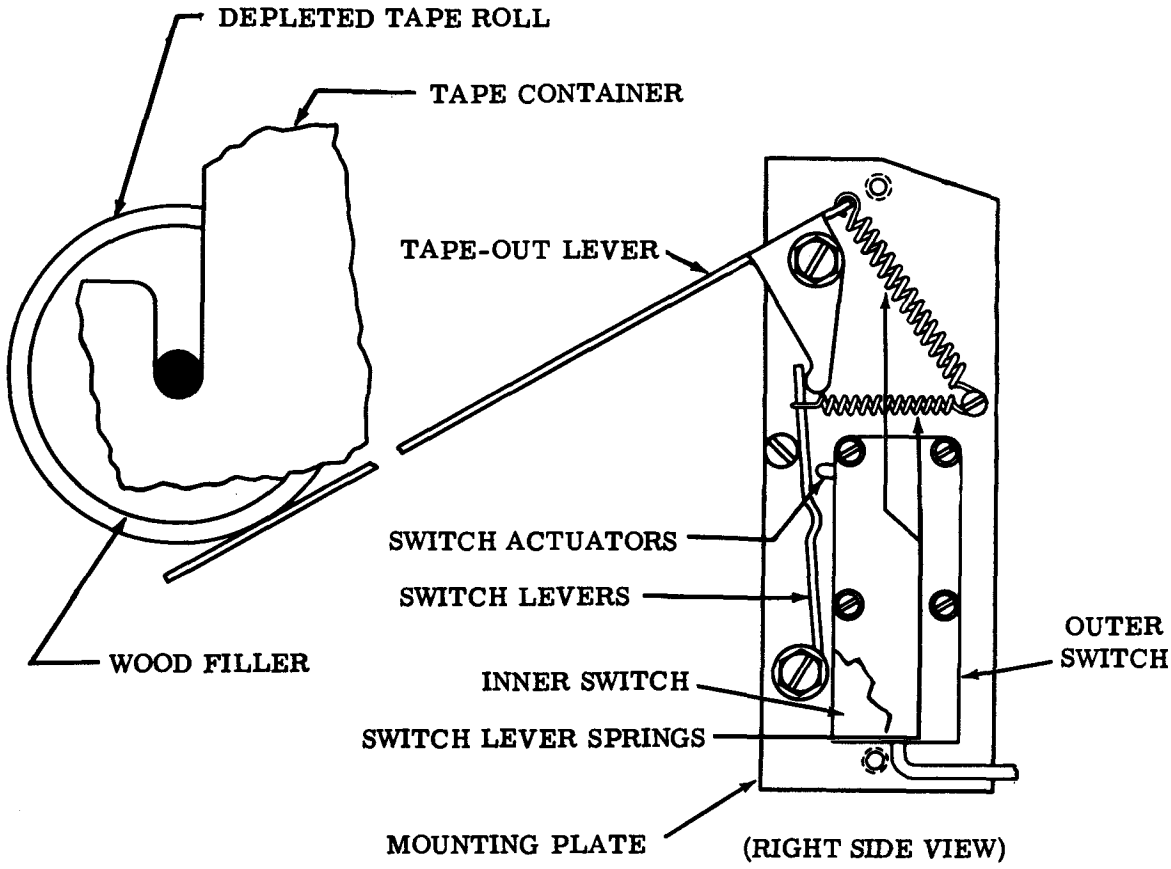

LOW TAPE SWITCHES

(1) Requirement
Outer switch must operate first.

(2) Requirement
Inner switch should just close when tape is depleted to a diameter of between 2-5/16 inches and 2-7/16 inches.

To Adjust
Bend switch actuator to meet requirement (1). Position mounting plate with mounting screws loosened to meet requirement (2).

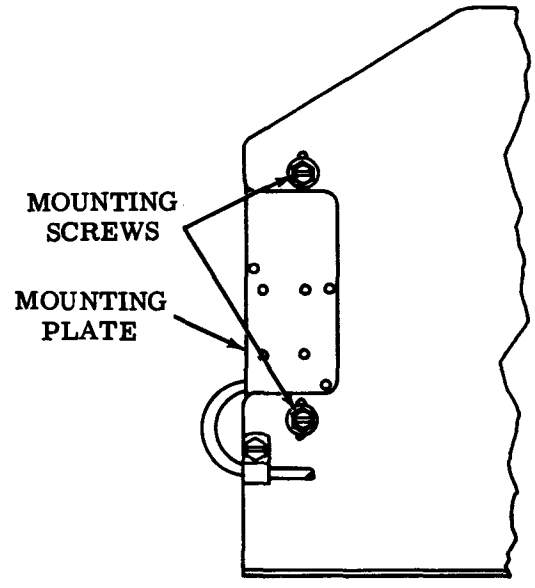

4. MULTIPLE REPERFORATOR BASE

4.01 Timing Belt

Note: This adjustment should be made for each typing reperforator unit.

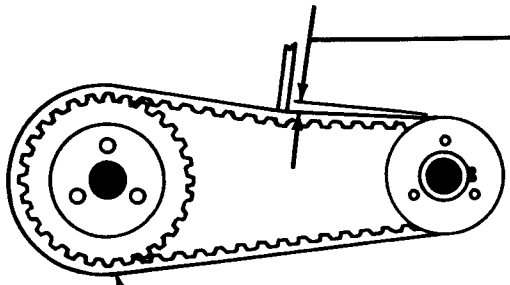

(RIGHT SIDE VIEW)

TIMING BELT

Requirement
Slight pressure at center of span (8 ± 1 oz) should deflect belt
Min 3/32 inch---Max 5/32 inch

CAUTION: BELT SHOULD NOT BE TIGHT.

To Adjust
With two anchor bracket screws and three mounting screws loosened, position typing reperforator unit. Tighten three mounting screws. Press anchor bracket against base plate and tighten screw holding bracket to reperforator. Tighten screw holding bracket to base.

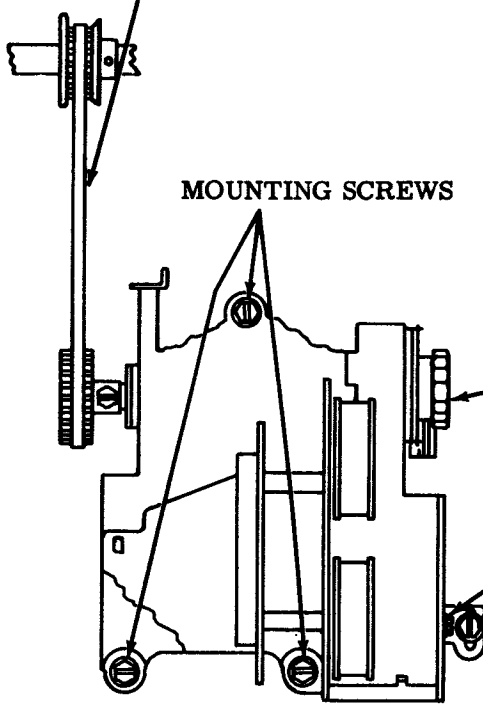

(TOP VIEW)

4.02 Low Tape Mechanism

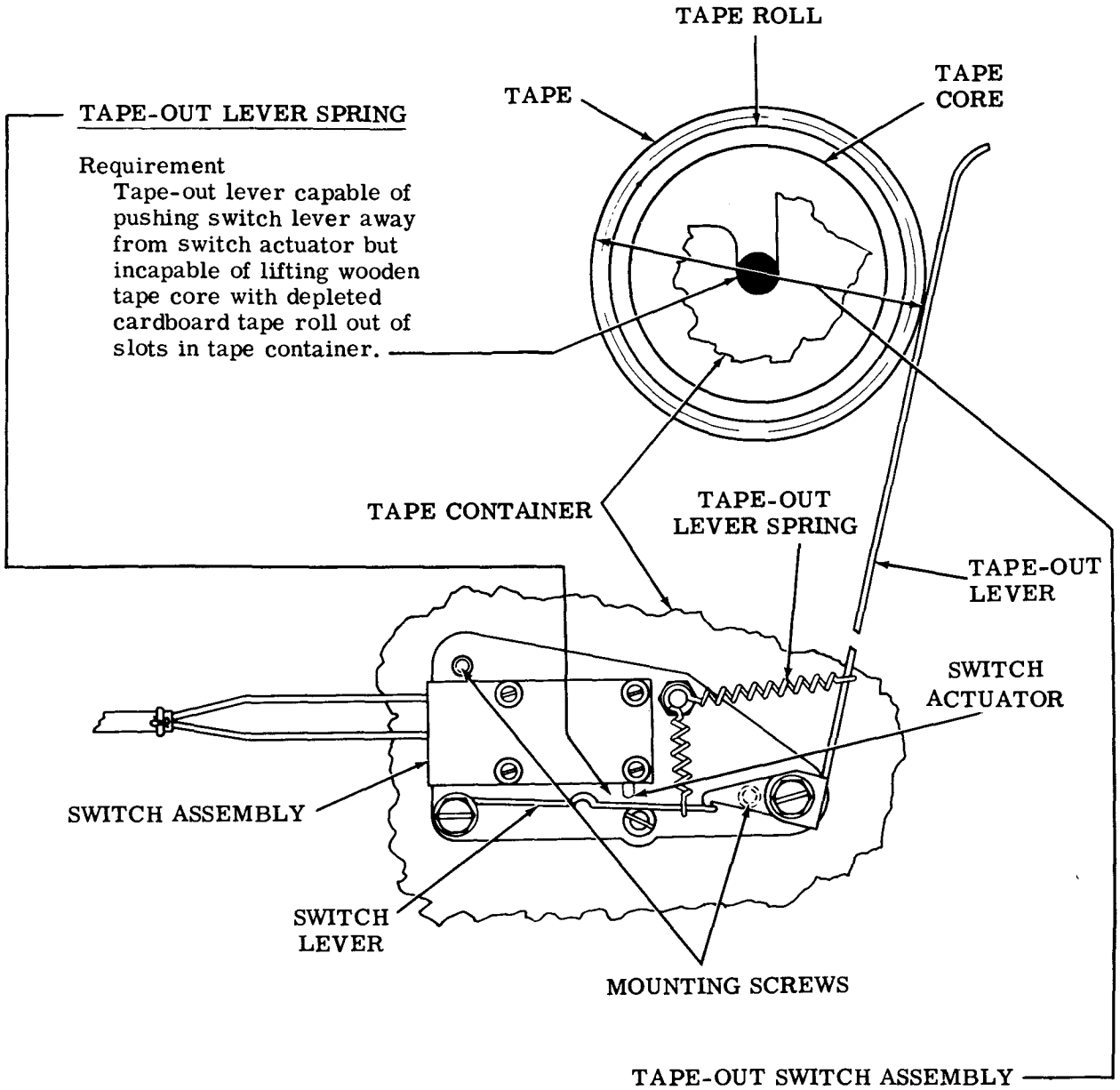

TAPE-OUT LEVER SPRING

Requirement
Tape-out lever capable of pushing switch lever away from switch actuator but incapable of lifting wooden tape core with depleted cardboard tape roll out of slots in tape container.

TAPE-OUT SWITCH ASSEMBLY

Requirement
Switch should operate when diameter of tape roll is
Min 2-3/8 inch---Max 2-5/8 inch.
(Check with test lamp.)

To Adjust
With two mounting screws loosened, position switch assembly on tape container.

35 TYPING REPERFORATOR (LPR)

ADJUSTMENTS

CONTENTS PAGE

CONTENTS PAGE

CONTENTS PAGE

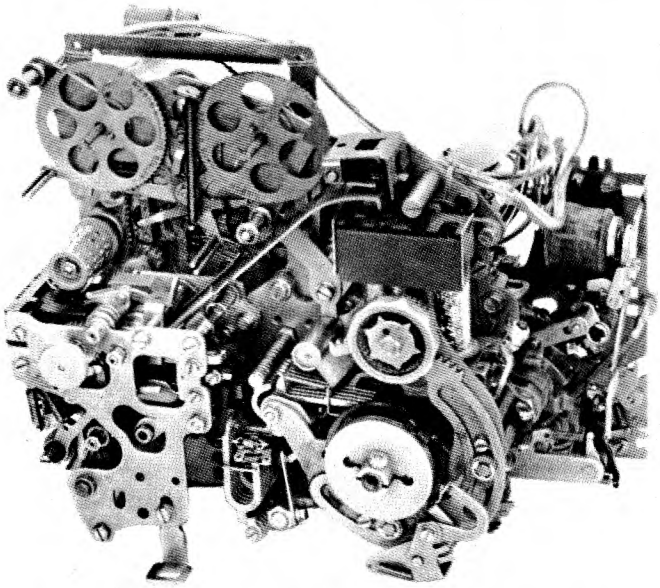

Figure 1 - Typical 35 Typing Reperforator (Front View)

1. GENERAL

1.01 This section provides adjustments and requirements for the 35 typing reperforator (Figure 1). The section has been revised to include recent engineering changes and additions and to rearrange the text. Since this is a general revision, marginal arrows ordinarily used to indicate changes and additions are omitted.

1.02 The basic equipment includes selector mechanism, transfer mechanism, eight-level fully perforating punch mechanism, and printing mechanism. The printing mechanism includes letters-figures contacts and magnet and may include print suppression, remote control noninterfering rubout tape feed-out, end of feed-out timing contacts, and power drive backspace mechanisms.

1.03 Reference to left or right, front or rear, and up or down refer to the apparatus in its normal operating position, as viewed from the front with the selector mechanism to the right and the punch mechanism to the left. It is assumed that the elements depicted in illustrations in this section are being viewed from a position in front of the equipment, unless the illustrations are specifically labeled otherwise. In the illustrations, pivot points are shown by circles or ellipses that are solid black to indicate fixed points and cross-hatched to indicate floating points.

1.04 Tools required to make the adjustments and test the spring tensions are listed in Section 570-005-800TC. Spring tensions given in this section are indications, not exact values, and should be checked with the correct scale applied in the positions shown in the drawings.

1.05 The unit is in its unoperated, or stop, condition when it is not under power. It is in its idling condition when it is under power and clutches are disengaged (steady marking condition of signal line). The unit is in the letters condition when the type wheel rack is in its upper position (the numerals appear on the top half of the type wheel). The unit is in the figures condition when the type wheel rack is in its lower position (the letters appear on the top half of the type wheel).

CAUTION: APPARATUS SHOULD NOT BE SEPARATED FROM ITS PROTECTIVE HOUSING UNLESS POWER IS DISCONNECTED. WHERE OPERATION OF THE EQUIPMENT IS REQUIRED AFTER IT

HAS BEEN SEPARATED FROM ITS PROTECTIVE HOUSING, APPROPRIATE PRECAUTIONARY MEASURES SHOULD BE TAKEN TO PREVENT ACCIDENTS.

1.06 When a requirement calls for a clutch to be DISENGAGED, the clutch shoe lever must be fully latched between its trip lever (or stop arm) and latchlever. The mainshaft will then turn freely without the clutch shoes dragging. When the clutch is ENGAGED, the shoe lever and cam disc stop-lug are moved apart, and the clutch shoes are wedged against the drum so that the clutch turns with the shaft.

Note: If the shaft is turned by hand, the clutch will not fully disengage upon reaching its stop position. Where a procedure calls for disengagement, rotate the clutch to its stop position, apply a screwdriver to the cam disc stop-lug and turn the disc in the normal direction of shaft rotation until the latchlever seats in its notch in the disc.

1.07 To manually operate the 35 typing reperforator, proceed as follows:

(a) Attach the armature clip to the selector magnet armature by carefully putting the flat formed end of the armature clip over the top of the armature between the pole pieces and then hooking the projection under the edge of the armature. The spring tension of the armature clip will hold the selector armature in the marking (attracted) position.

(b) While holding the selector magnet attracted by means of the armature clip, manually rotate the mainshaft in a counterclockwise direction until all the clutches are brought to their disengaged position.

(c) Fully disengage the clutches in accordance with 1.06, Note.

(d) Release the selector magnet armature momentarily to permit the selector clutch to engage.

(e) Rotate the mainshaft slowly until all the pushlevers have fallen to the left of their selecting levers.

(f) Strip the pushlevers from their selector levers if they are spacing in the code combination of the character or function that is being selected. Allow the pushlevers to move to the right. The pushlevers and selector levers move in succession, starting with the inner lever no. 1 to the outer lever no. 8.

(g) Continue to rotate the mainshaft until all operations initiated by the selector action clear through the unit.

1.08 Parts dismantled to facilitate checking or readjustment should be reassembled after the operation is completed. If a part mounted on shims is to be dismantled, the number of shims used at each mounting screw should be noted so that the same shim pileups can be replaced when the part is remounted. When parts removed are replaced, related adjustments which may have been affected should be checked.

1.09 Parts that are worn to the extent that they can no longer be made to meet the specified requirements by authorized adjustments, or which are worn to the extent that it seems probable that early further wear might cause a loss of adjustment, should be replaced by new parts. Springs which do not meet the requirements and for which there are no adjusting procedures should be discarded and replaced by new springs.

1.10 All contact points should meet squarely. Smaller points should fall wholly within the circumference of larger mating points. Points that are the same size should not be out of alignment more than 25 percent of the point diameter. Avoid sharp kinks or bends in the contact springs.

Note: Keep all electrical contacts free of oil and grease.

1.11 Where a 35 typing reperforator is used as a component of a receive only or a send-receive set, it is mounted on a base or keyboard base. Refer to the base, keyboard and other applicable sections for gear mesh and additional adjustment requirements.

2. BASIC UNIT

2.01 The following figures show the adjusting tolerances, position of parts, and spring tensions. The illustrations are arranged so that the adjustments are in the sequence that would be followed if a complete readjustment of the apparatus were being made. In some cases, where an illustration shows interrelated parts, the sequence that should be followed in checking the requirements and making the adjustments is indicated by the letters (A), (B), (C), etc.

2.02 Selector Mechanism

2.03 Function Mechanism

Note: For gear mesh adjustment, refer to applicable sections covering base or keyboard mounting facility.

(A) CLUTCH SHOE LEVER

Note: This adjustment should be made for both selecting and function clutches.

(1) To Check
Disengage clutch. Measure clearance.

(2) To Check
Align head of clutch drum mounting screw with stop-lug. Engage clutch. Manually press shoe lever and stop-lug together and allow to snap apart. Measure clearance.

Requirement
Clearance between shoe lever and stop-lug
Min 0.055 inch---Max 0.085 inch
greater when clutch engaged (2) than when disengaged (1).

To Adjust
Engage wrench or screwdriver with lug on adjusting disc. Rotate disc with clamp screws loosened. Tighten screws.

Note: After making adjustment, disengage clutch. Remove drum mounting screw. Rotate drum in normal direction and check to see if it drags on shoe. If it does, refine adjustment.

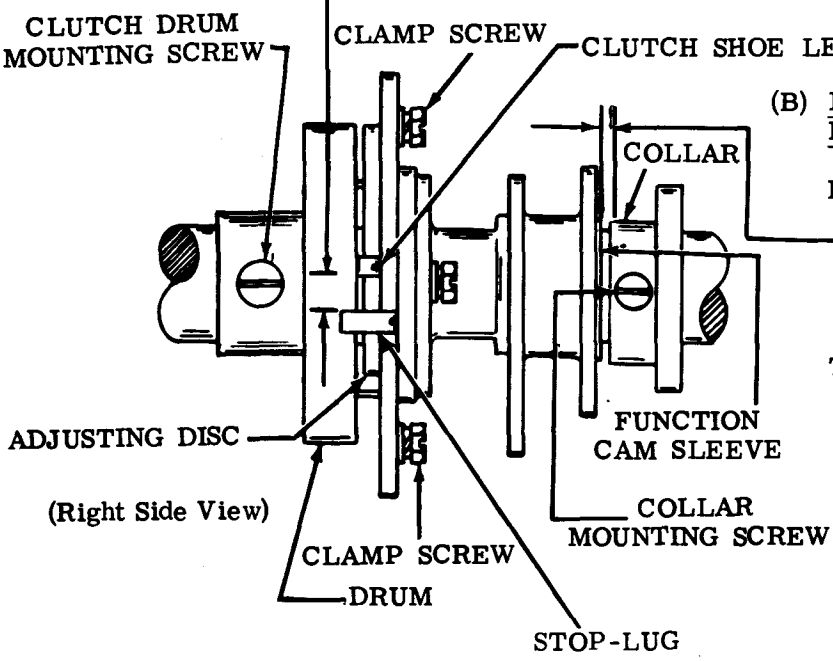

(B) FUNCTION CLUTCH DRUM ENDPLAY

Requirement
With function clutch disengaged
Min some---Max 0.015 inch
when play is taken up to make clearance maximum.

To Adjust
With its mounting screw loosened, move drum to extreme front position. Tighten drum mounting screw. Position collar with mounting screw loosened. Tighten screw.

2.04 Selector Mechanism (continued)

2.05 Function Mechanism (continued)

Note: These spring tensions apply to both clutches.

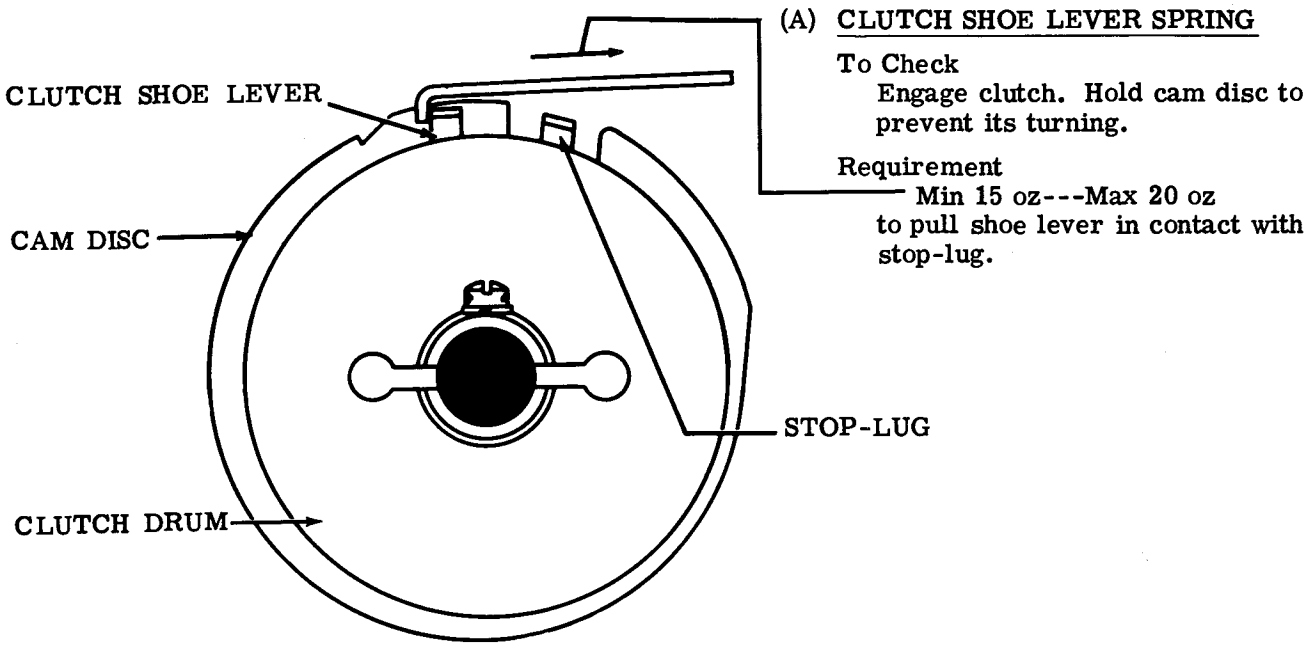

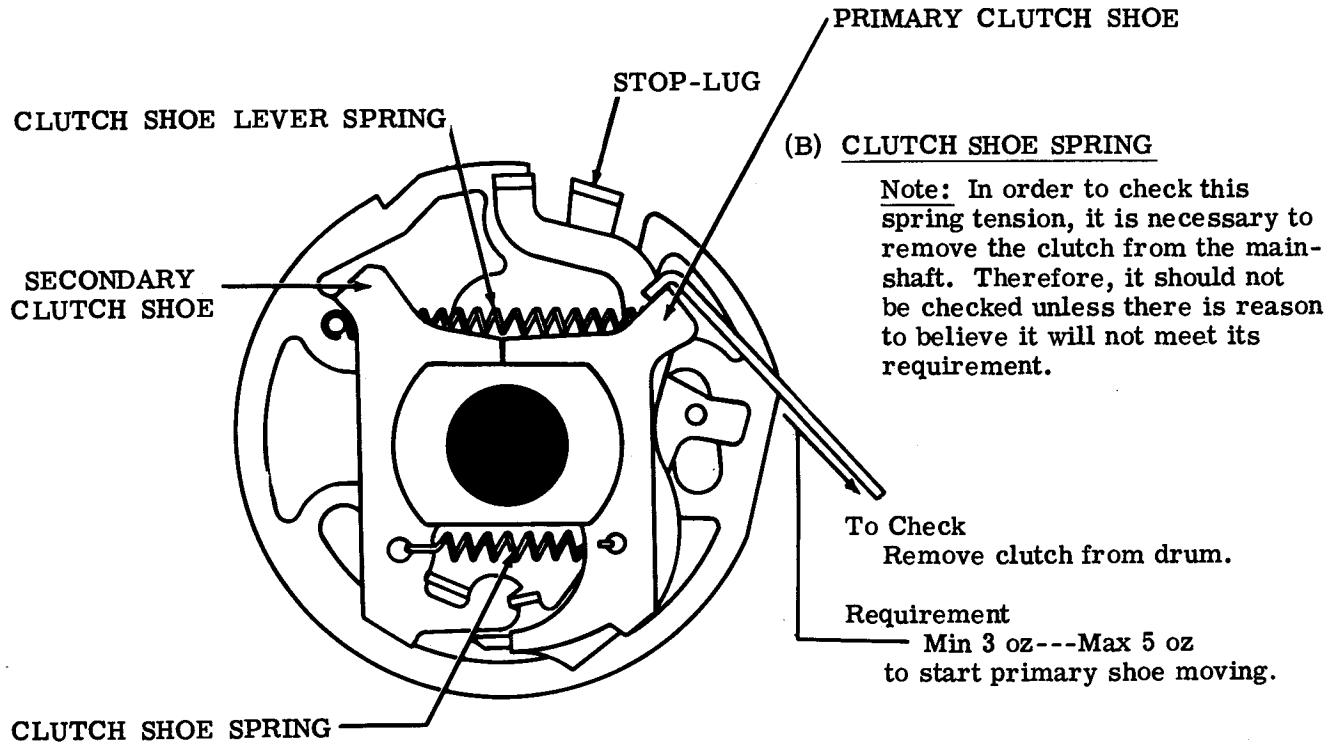

2.06 Selector Mechanism (continued)

Note: To facilitate making the following adjustments, remove the range finder assembly and selector magnet assembly. To insure better operation, pull a piece of bond paper between the armature and the pole pieces to remove any oil or foreign matter that may be present. Make certain that no lint or pieces of paper remain between the pole pieces and the armature.

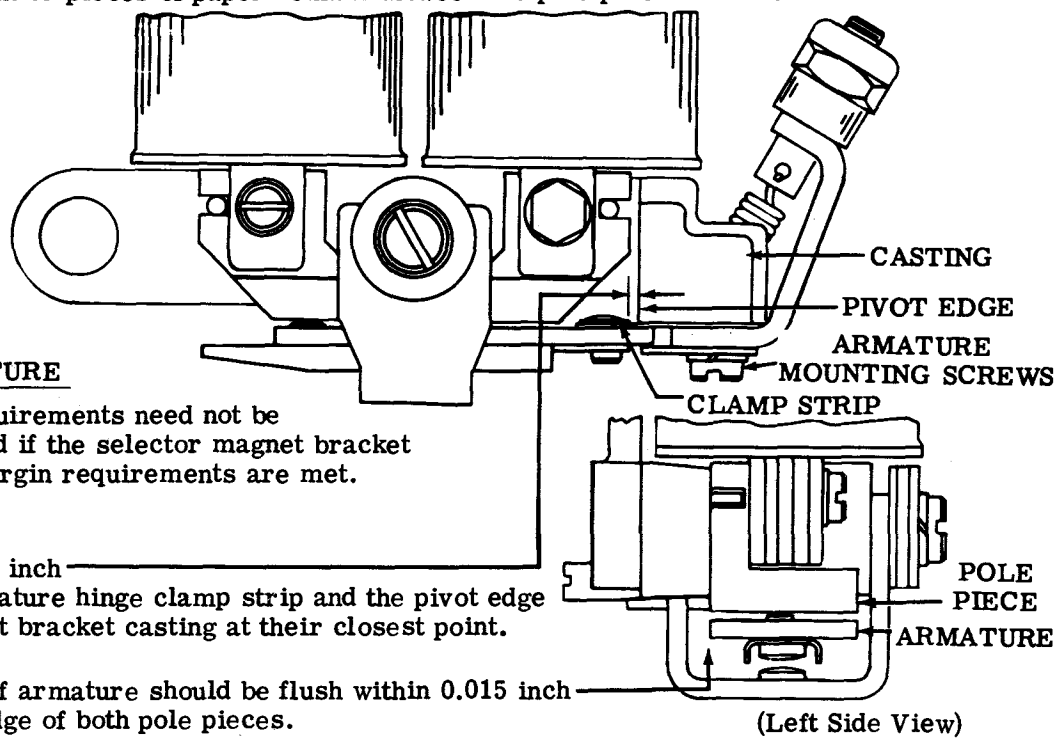

SELECTOR ARMATURE

Note: These requirements need not be made nor checked if the selector magnet bracket and receiving margin requirements are met.

(1) Requirement
Clearance
Min 0.010 inch
between armature hinge clamp strip and the pivot edge of the magnet bracket casting at their closest point.

(2) Requirement
Outer edge of armature should be flush within 0.015 inch with outer edge of both pole pieces.

(3) Requirement
Start lever should drop freely into armature extension slot.

To Adjust
Position armature spring adjusting nut to hold armature firmly against pivot edge of casting. Position armature with mounting screws loosened. Tighten screws.

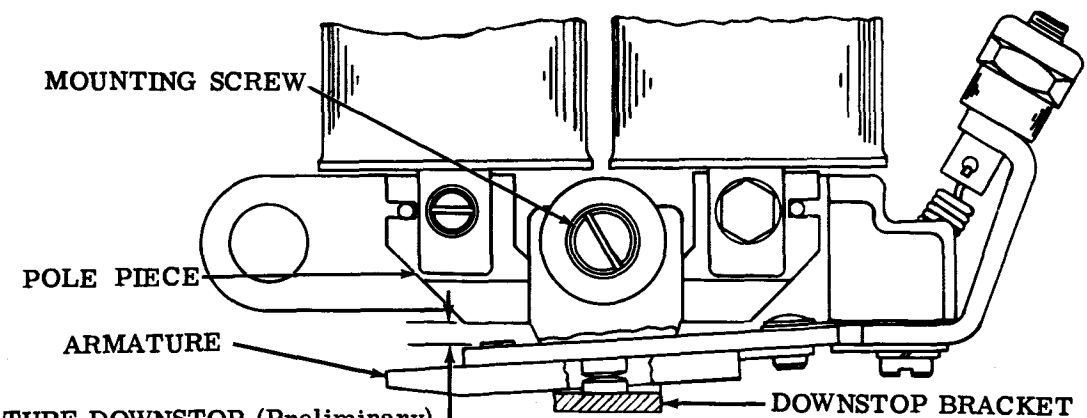

SELECTOR ARMATURE DOWNSTOP (Preliminary)

Requirement
Remove oil shield. With magnet de-energized, locklevers on high part of their cam, and armature resting against its downstop, clearance between end of armature and left edge of left pole piece
Min 0.030 inch---Max 0.035 inch

To Adjust
Position downstop bracket with mounting screw loosened. Replace oil shield and check OIL SHIELD (2.16) adjustment. Tighten screw.

2.07 Selector Mechanism (continued)

Note: The appropriate preliminary SELECTOR ARMATURE SPRING (2.10) requirement must be made prior to this adjustment.

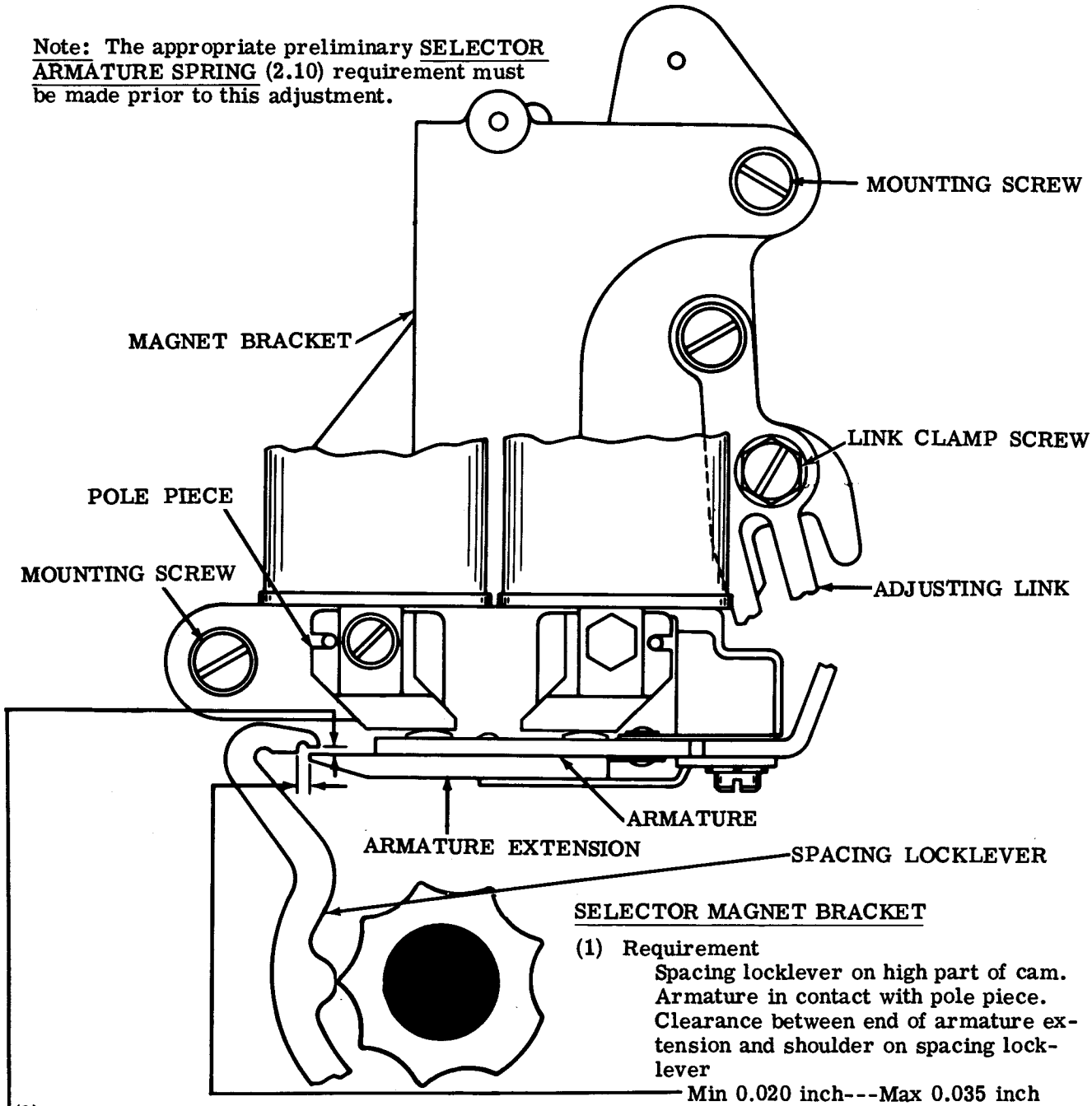

SELECTOR MAGNET BRACKET

(1) Requirement
Spacing locklever on high part of cam.
Armature in contact with pole piece.
Clearance between end of armature extension and shoulder on spacing locklever
Min 0.020 inch---Max 0.035 inch

To Adjust
Loosen two magnet bracket mounting screws and adjusting link clamp screw.
Position magnet bracket by means of adjusting link and tighten link clamp screw only.

Note: See following page for requirement (3).

(2) Requirement
Spacing locklever on high part of cam.
Armature in contact with pole piece.
Min some---Max 0.003 inch
clearance between upper surface of the upper step of the spacing locklever when locklever is held downward.

To Adjust
Position upper end of magnet bracket.
Tighten two magnet bracket mounting screws.
Recheck requirement (1).

2.08 Selector Mechanism (continued)

Note: See preceding page for SELECTOR MAGNET BRACKET adjustment, requirements (1) and (2).

SELECTOR MAGNET BRACKET (continued)

(3) Requirement
Marking locklever on low part of cam. Magnet energized. Armature in contact with left pole piece. Some clearance between lower surface of armature extension and upper surface of marking locklever.

To Adjust
Position upper end of magnet bracket with mounting screws loosened. Tighten mounting screws and recheck requirements (1) and (2).

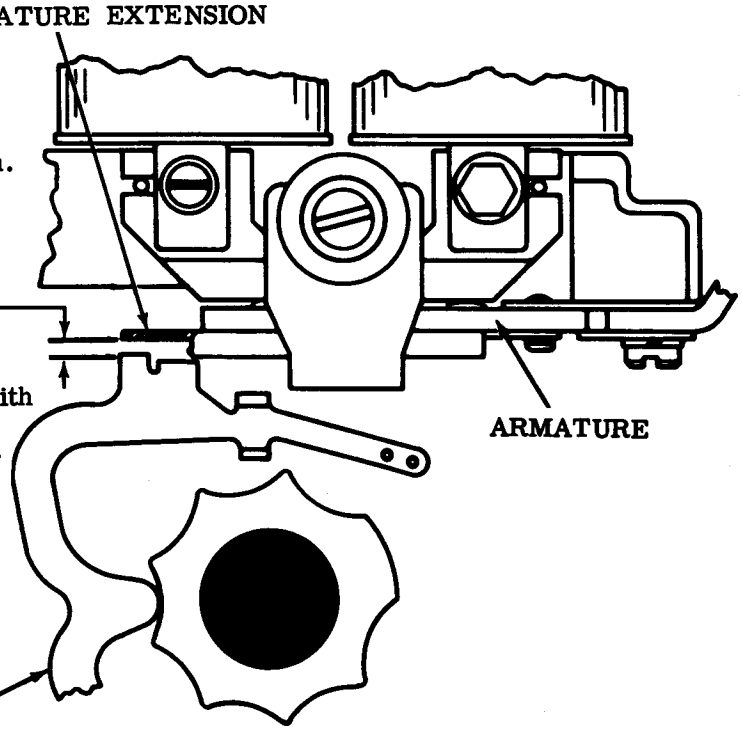

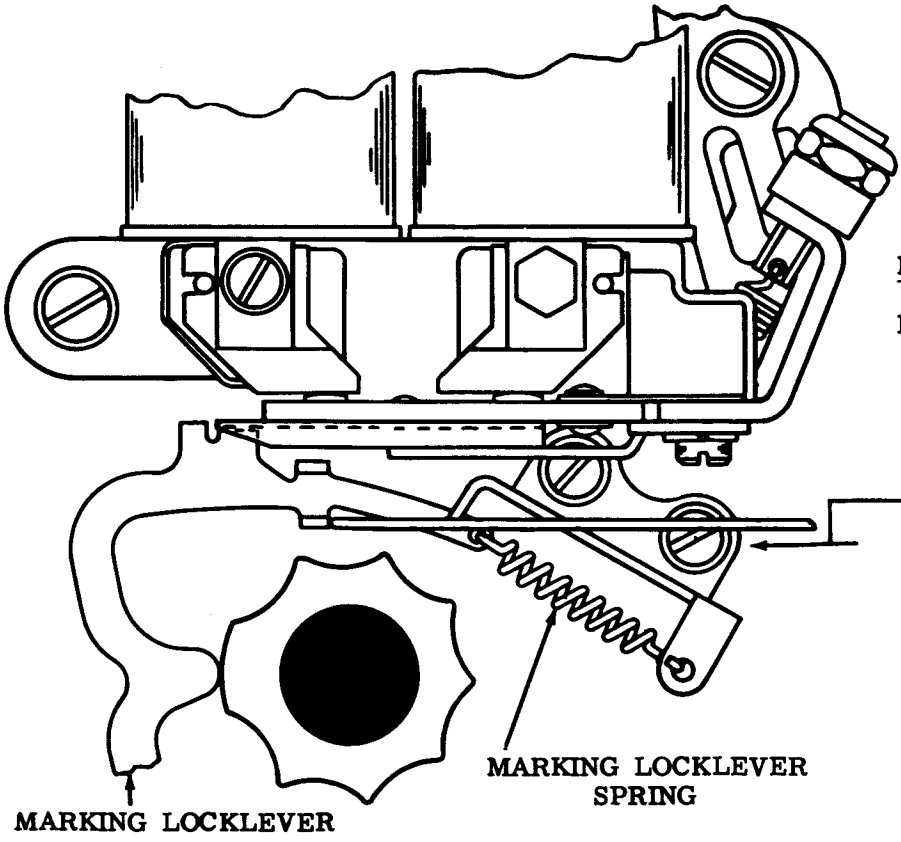

MARKING LOCKLEVER SPRING

Requirement
Rubout combination (12345678) selected. Mainshaft rotated until selector clutch is disengaged. Push scale applied to lower extension of locklever Min 2 oz---Max 4 oz to start lever moving.

2.09 Selector Mechanism (continued)

SELECTOR ARMATURE DOWNSTOP (Final)

Requirement

With the selector magnet de-energized and the spacing locklever on the low part of its cam, there should be

Min 0.005 inch---Max 0.015 inch

clearance between the top of the armature extension and the bottom of the lower step of the spacing locklever.

To Adjust

Refine the SELECTOR ARMATURE DOWNSTOP (Preliminary) (2.06) adjustment.

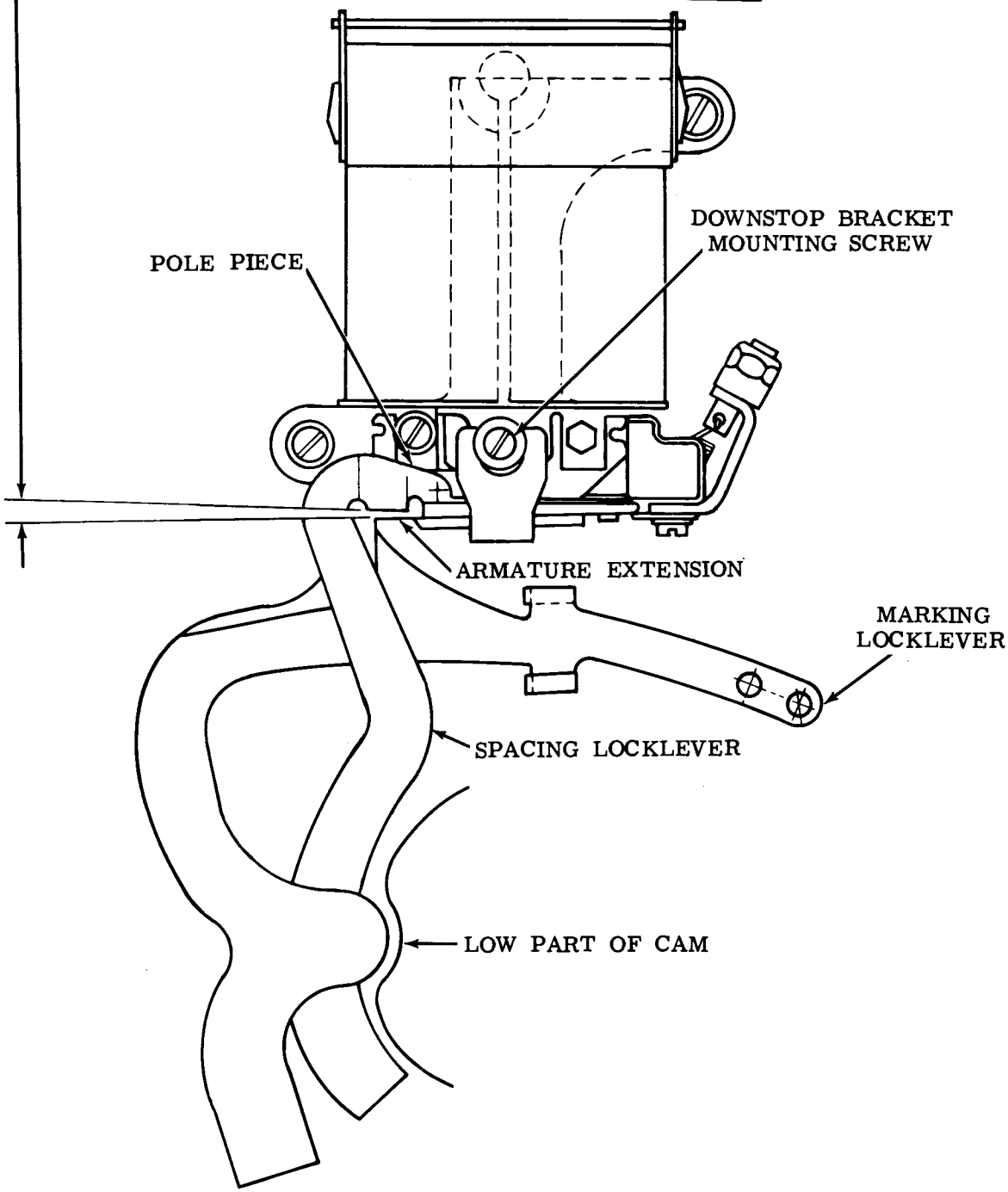

2.10 Selector Mechanism (continued)

SELECTOR ARMATURE SPRING (Preliminary)
(For Units Employing Selector Armature With Two Antifreeze Buttons Only)

Requirement
With locking levers and start lever on high part of their cams, scale applied as nearly vertical as possible under end of armature extension, it should require approximately the following tensions to move the rear antifreeze button against the magnet core.

0.060 Ampere — Approximately 21 grams
0.500 Ampere — Approximately 28 grams

To Adjust
Position adjusting nut.

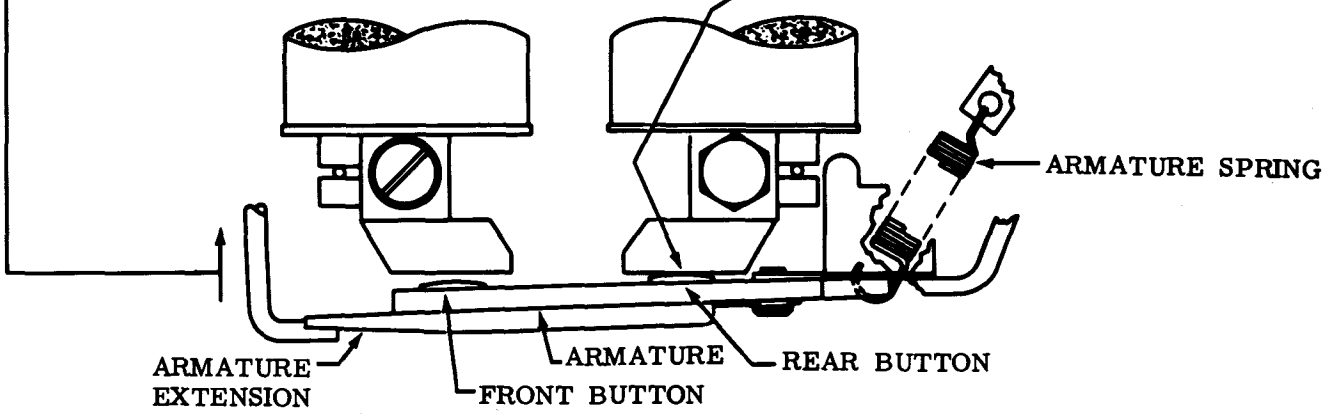

Note: See SELECTOR RECEIVING MARGIN (2.15) adjustment

SELECTOR ARMATURE SPRING (Final)

(1) Requirement
When a distortion test set is available, the selector armature spring tension should be refined (15 grams min), if necessary, to obtain satisfactory receiving margins. The front antifreeze button must contact the magnet core when the magnet coils are energized.

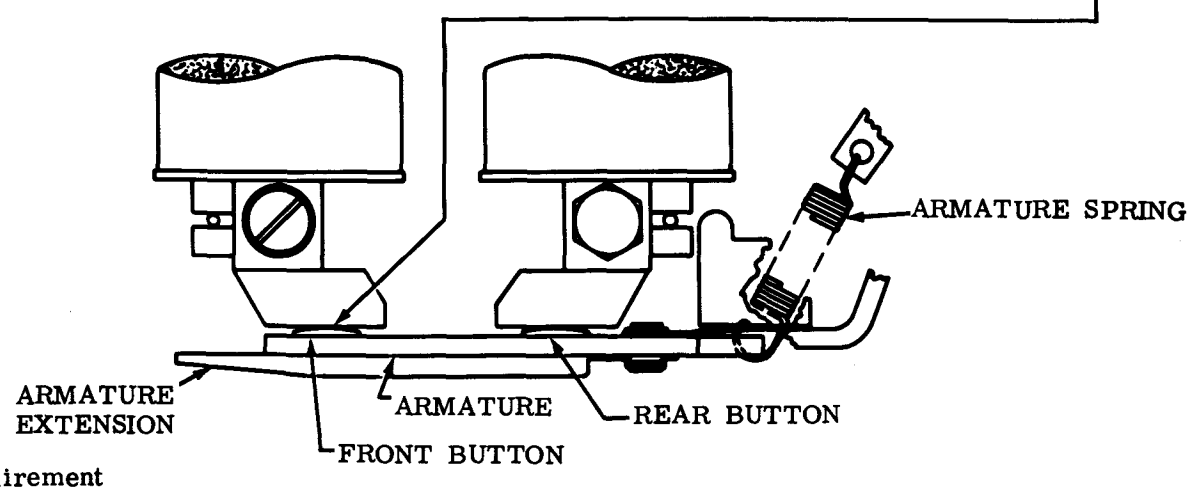

(2) Requirement
See SELECTOR RECEIVING MARGIN (2.15) adjustment.

2.11 Selector Mechanism (continued)

SELECTOR ARMATURE SPRING (Preliminary) (continued)
(For Units Employing Selector Armature With Single Antifreeze Button Only)

(1) Requirement

With locking levers and start lever on high part of their cams, scale applied as nearly vertical as possible under end of armature extension, it should require the following tensions to move armature to marking position:

0.060 Ampere - Min 2-1/2 oz---Max 3 oz
0.500 Ampere - Min 4-1/2 oz---Max 5-1/2 oz

Note: This spring can be adjusted for maximum selector performance only when printer is connected to the specific circuit over which it is to operate under service conditions. Since there are several operating speeds and since circuits vary widely, it is impossible to adjust spring for maximum performance at the factory. The foregoing spring tension requirement is given to permit operation prior to measurement of receiving margins. Readjustment made to obtain satisfactory receiving margin should not be disturbed in order to meet requirements of this adjustment.

To Adjust

Position adjusting nut.

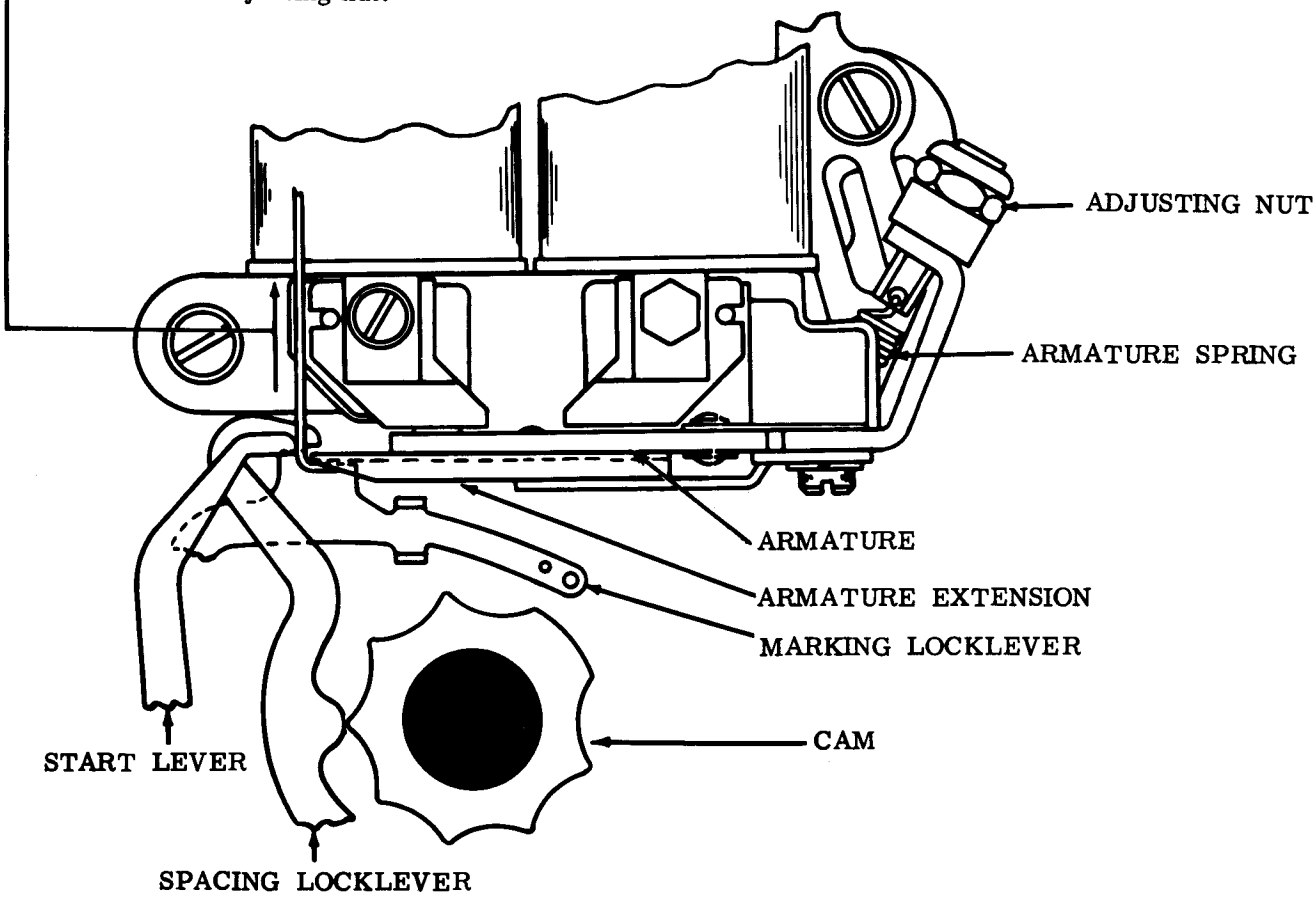

(2) Requirement

See SELECTOR RECEIVING MARGIN (2.15) for final adjustment

2.12 Selector Mechanism (continued)

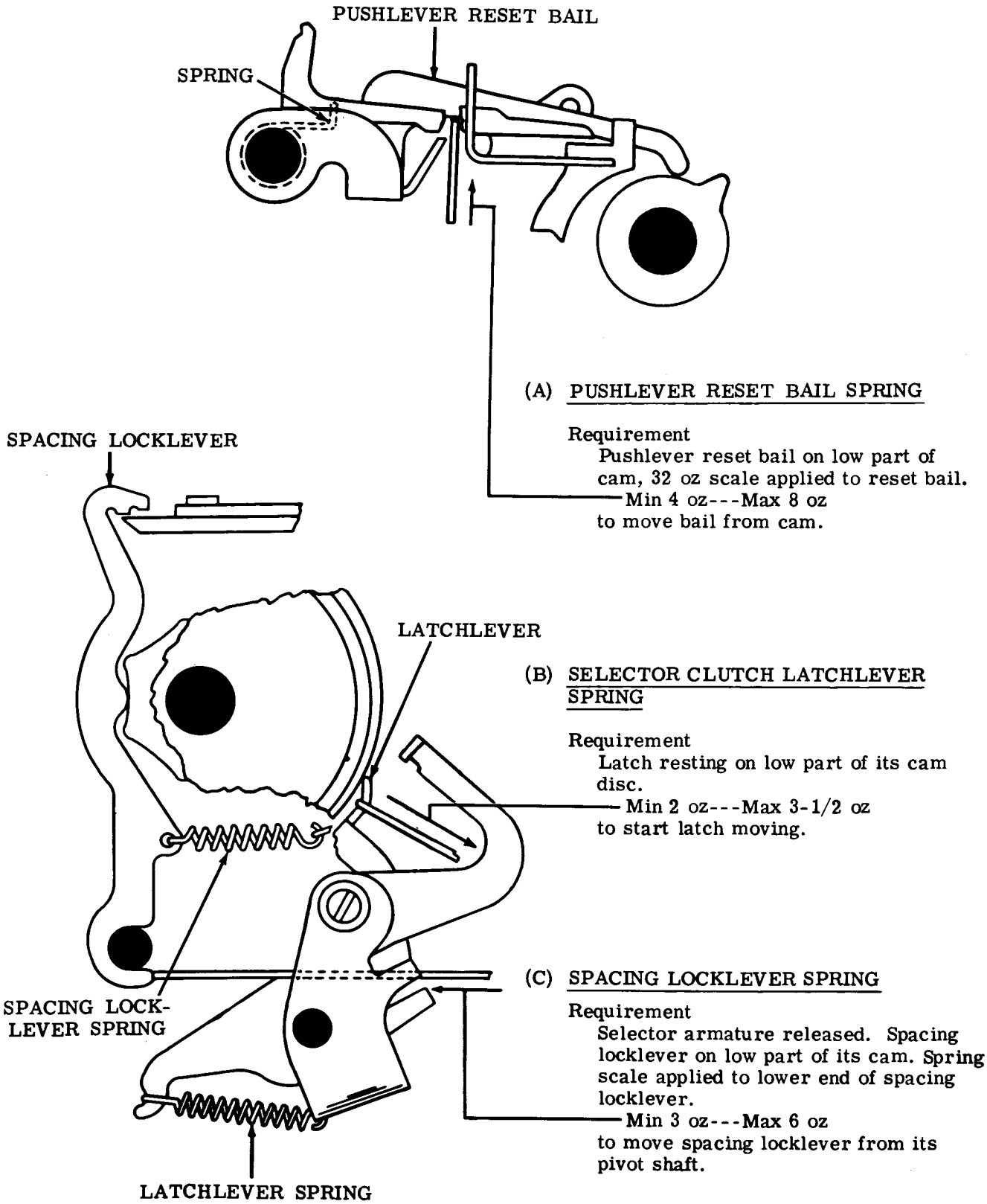

2.13 Selector Mechanism (continued)

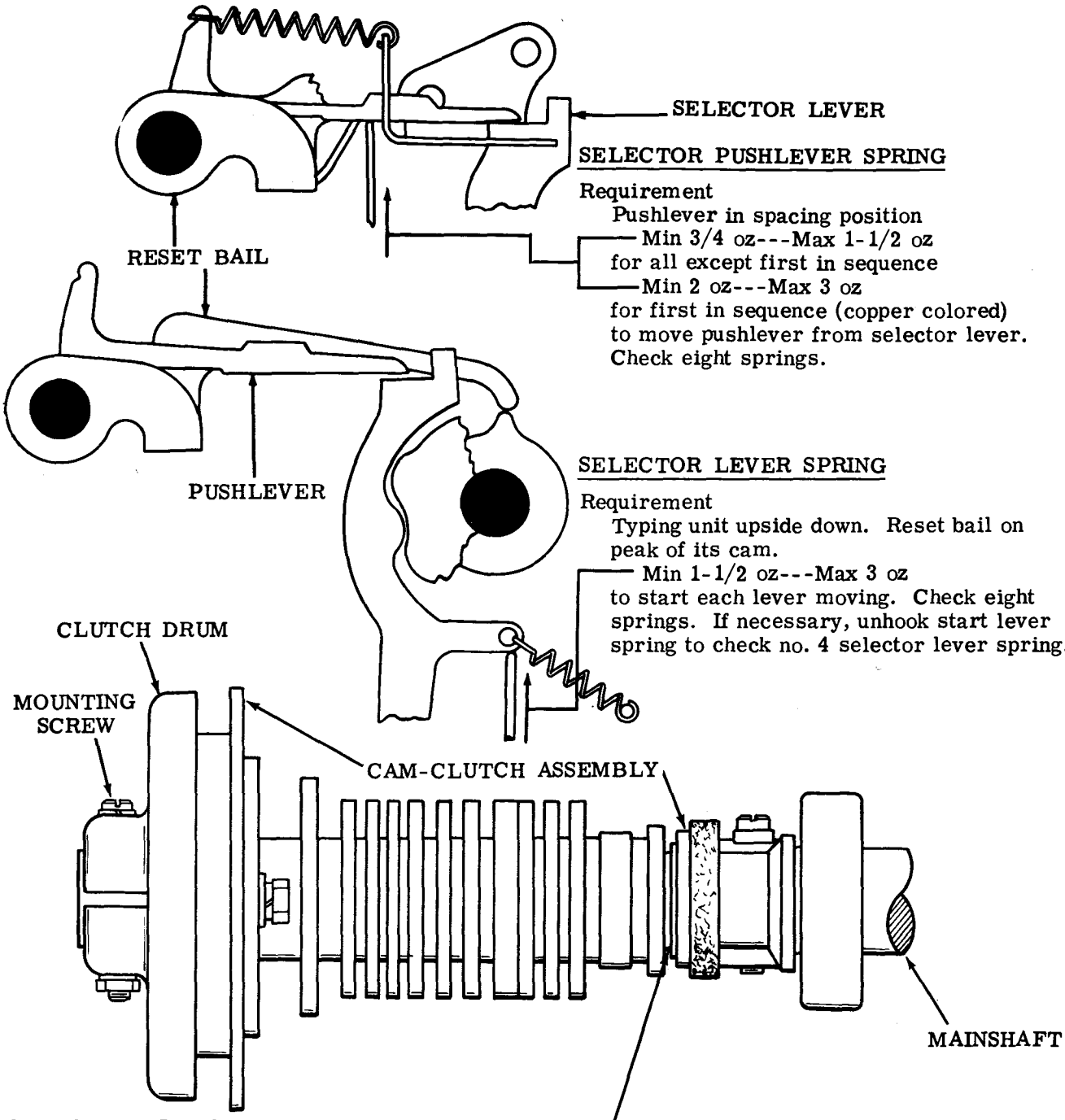

SELECTOR PUSHLEVER SPRING

Requirement

Pushlever in spacing position

Min 3/4 oz---Max 1-1/2 oz for all except first in sequence

Min 2 oz---Max 3 oz for first in sequence (copper colored) to move pushlever from selector lever. Check eight springs.

SELECTOR LEVER SPRING

Requirement

Typing unit upside down. Reset bail on peak of its cam.

Min 1-1/2 oz---Max 3 oz to start each lever moving. Check eight springs. If necessary, unhook start lever spring to check no. 4 selector lever spring.

SELECTOR CLUTCH DRUM ENDPLAY

Requirement

Clutch latched in stop position. Cam assembly should have some endplay, not more than 0.010 inch.

To Adjust

Position clutch drum on mainshaft with mounting screw loosened.

2.14 Selector Mechanism (continued)

(A) RANGE FINDER KNOB PHASING

Requirement
With range finder knob turned to either end of rack, zero mark on scale should be in line with scribed line on range finder plate ±3 points.

To Adjust
Remove mounting nut, disengage knob from rack and position knob. Re-engage knob with rack and replace mounting nut.

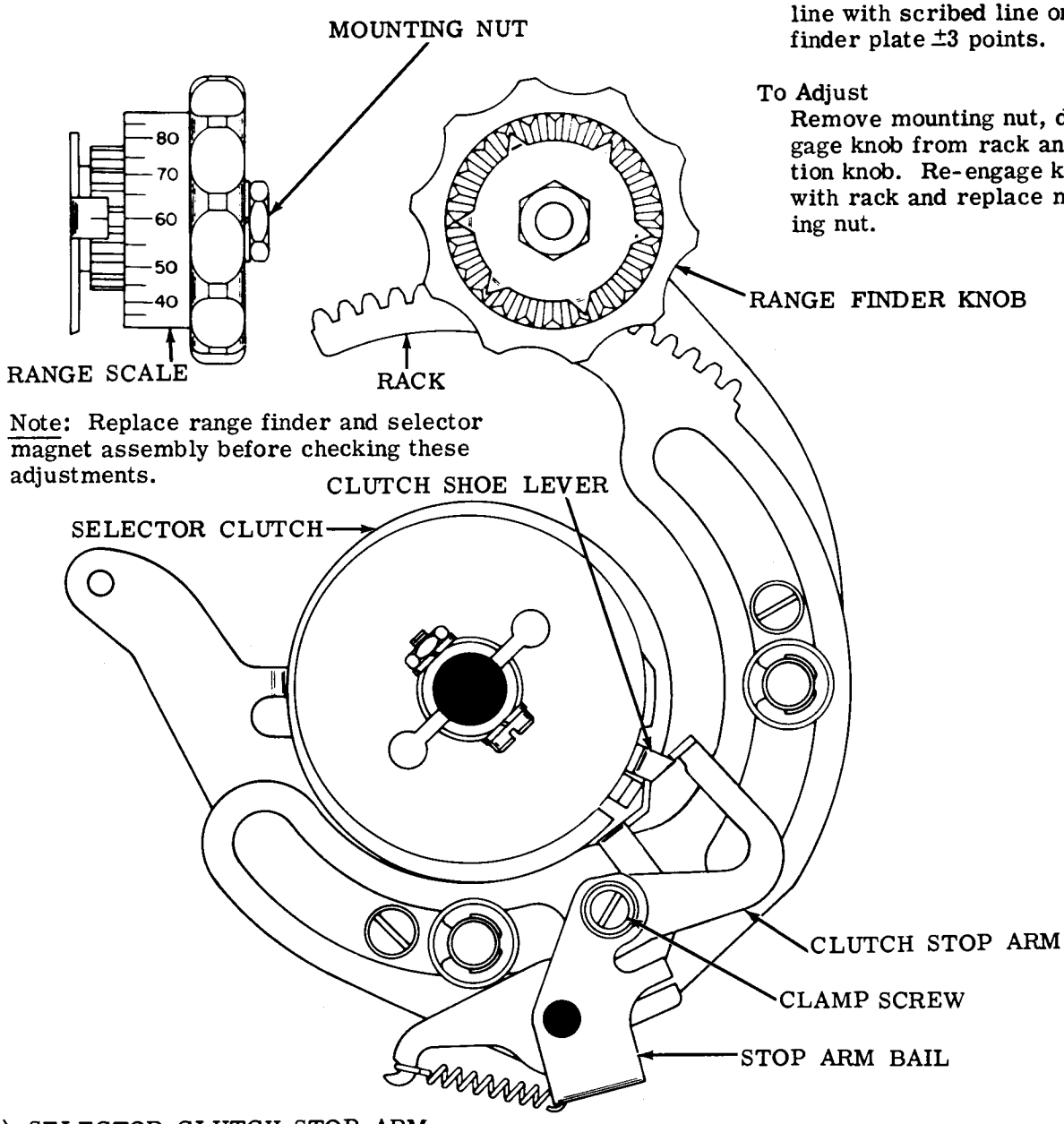

Note: Replace range finder and selector magnet assembly before checking these adjustments.

(B) SELECTOR CLUTCH STOP ARM

Requirement
Range scale set at 60. Selector clutch disengaged. Armature in marking position. Clutch stop arm should engage clutch shoe lever by approximately full thickness of stop arm.

To Adjust
Position stop arm on stop arm bail with clamp screw loosened. Tighten screw.

2.15 Selector Mechanism (continued)

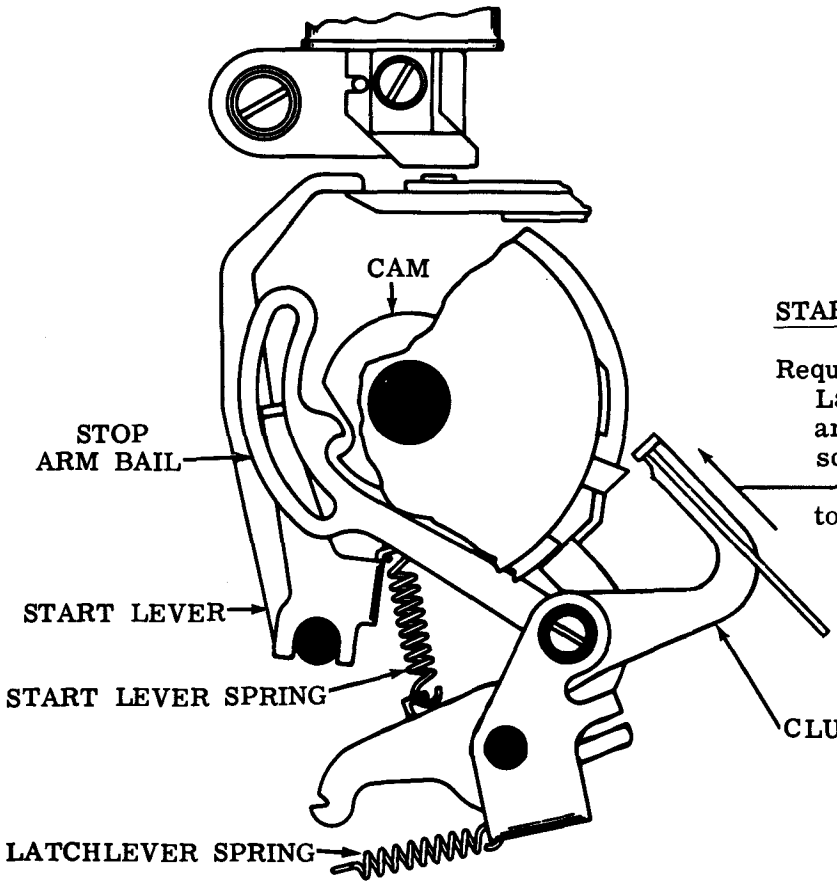

START LEVER SPRING

Requirement
Latchlever spring unhooked. Stop arm bail in indent of its cam. Range scale set at 60.
Min 2-1/2 oz---Max 4-1/4 oz to start stop arm moving.

SELECTOR RECEIVING MARGIN

(1) Requirement (For Units Employing Armature With One Antifreeze Button)
When a signal distortion test set is available for determining the receiving margins of the selector, and where the condition of the components is equivalent to that of new equipment, the range and distortion tolerances below should be met.

(2) Requirement (For Units Employing Armature With Two Antifreeze Buttons)
When a distortion test set is available, the selector armature spring tension should be refined, if necessary, to obtain satisfactory receiving margins. The front antifreeze button must contact the magnet core when the magnet coils are energized.

To Adjust
Refine the SELECTOR ARMATURE SPRING (2.10) adjustment.

SELECTOR RECEIVING MARGIN MINIMUM REQUIREMENTS

Current	Speed in WPM	Points Range with Zero Distortion	Percentage of Marking and Spacing Bias	End Distortion Tolerated with Scale at Bias Optimum Setting
0.500 Amp (Windings Series)	100	72	38	35

2.16 Selector Mechanism (continued)

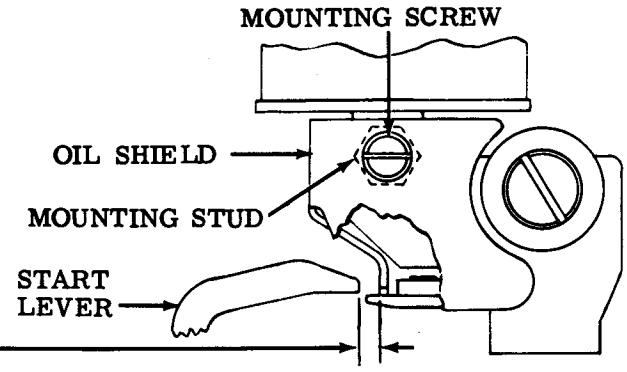

OIL SHIELD (If Applicable)

(1) Requirement
Magnet de-energized. Stop arm bail on low part of its cam. Clearance between start lever and oil shield
Min 0.020 inch

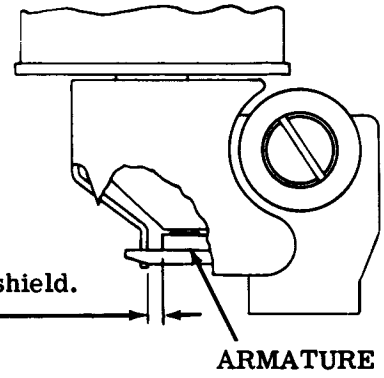

(2) Requirement
Magnet energized. Stop arm bail on high part of its cam. Clearance between end of armature and oil shield.
Min 0.010 inch

To Adjust
Position shield with mounting screw loosened. Make sure oil shield mounting stud is secure before making adjustment. Check to be sure there is clearance between the oil shield and armature extension when the armature is energized. Tighten screw.

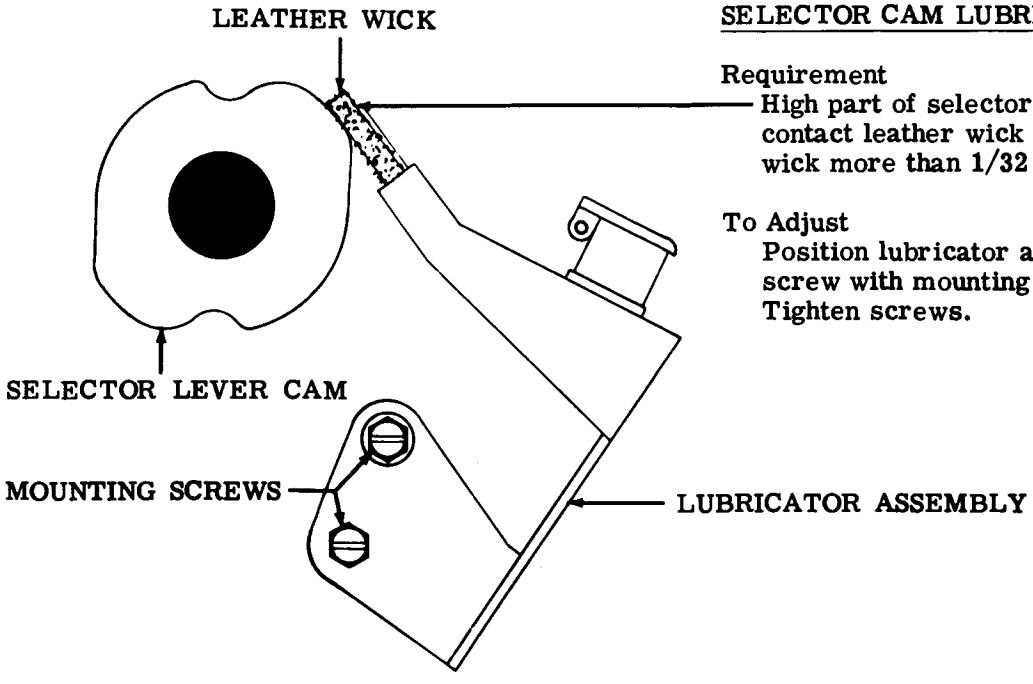

SELECTOR CAM LUBRICATOR

Requirement
High part of selector lever cams should contact leather wick but should not deflect wick more than 1/32 inch gauged visually.

To Adjust
Position lubricator assembly around lower screw with mounting screws loosened. Tighten screws.

2.17 Function Mechanism (continued)

Note 1: For units equipped with automatic noninterfering rubout tape feed-out mechanism, substitute adjustment in variable features, Part 3.

(A) TRIP CAM FOLLOWER LEVER (Preliminary)

(1) Requirement
With follower lever on high part of cam clearance between release and main trip lever
Min 0.010 inch---Max 0.030 inch

(2) Requirement
Some clearance between main trip lever and downstop bracket.

To Adjust
By means of pry point, position adjusting arm on follower lever with locknut loosened. Tighten nut.

(C) RESET BAIL TRIP LEVER SPRING (Latest Design)

Requirement
Trip reset bail trip lever extension. Pulling at top of lever
Min 1 oz---Max 4 oz
to start lever moving.

Note 2: It may be necessary to remove ribbon feed mechanism when checking this tension.

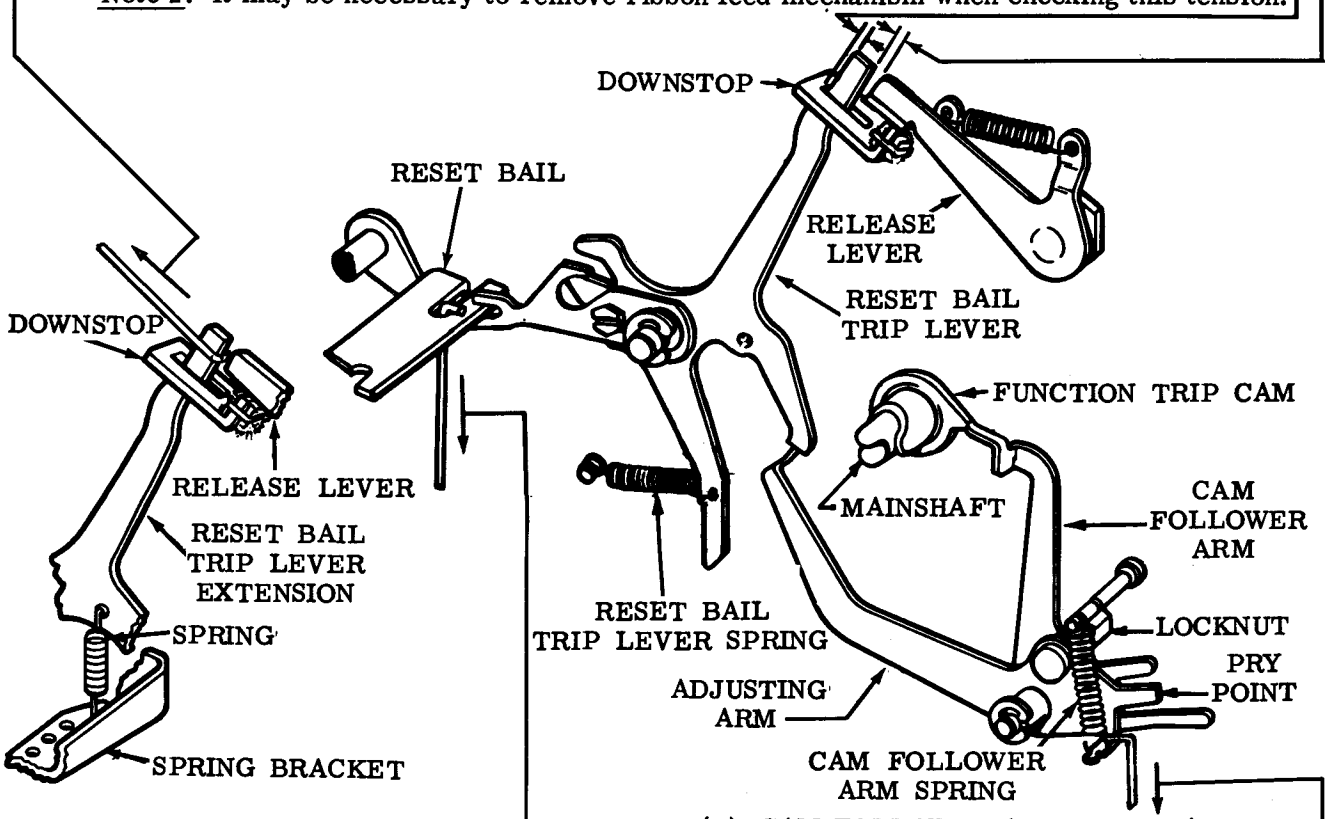

RESET BAIL TRIP LEVER SPRING (Early Design)

Requirement
With follower lever on high part of trip cam
Min 2-1/2 oz---Max 4-1/2 oz
to start trip lever moving.

(B) CAM FOLLOWER ARM SPRING (Early Design)

Requirement
With follower lever on high part of trip cam and main trip lever held away from adjusting arm
Min 2-1/2 oz---Max 4 oz
to start adjusting lever moving.

2.18 Function Mechanism (continued)

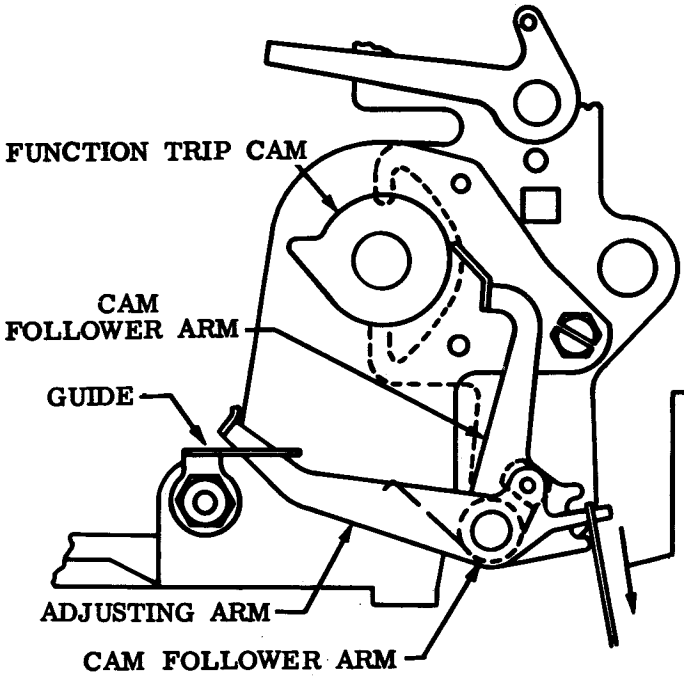

CAM FOLLOWER ARM SPRING (Latest Design)

Requirement
With cam follower arm on low part of trip cam and reset bail trip lever held away from adjusting arm
Min 1 oz---Max 4 oz
to start adjusting arm moving.

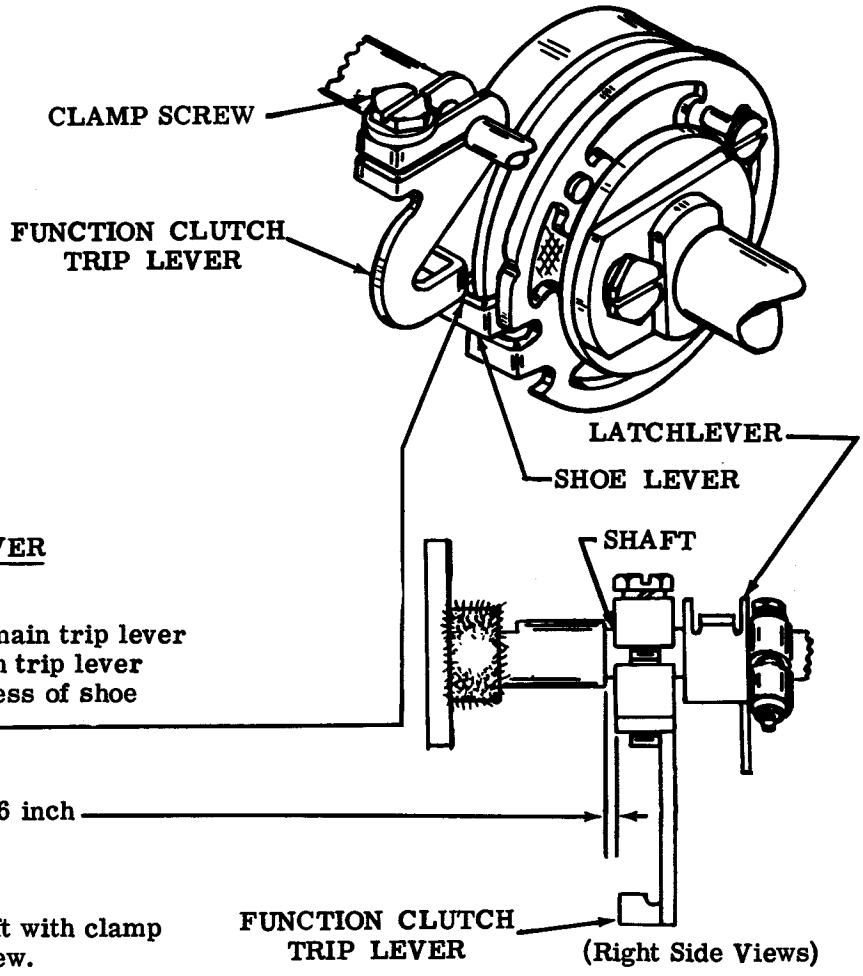

FUNCTION CLUTCH TRIP LEVER

(1) Requirement
With release resting on main trip lever (see 2.19), function clutch trip lever should engage full thickness of shoe lever.

(2) Requirement
Min some---Max 0.006 inch endplay in trip lever.

To Adjust
Position trip lever on its shaft with clamp screw loosened. Tighten screw.

2.19 Function Mechanism (continued)

(A) RESET ARM

To Check
Trip function clutch and position mainshaft so that reset arm is held in its highest position by cam pin.

(1) Requirement
Clearance between release and main trip lever
Min 0.010 inch---Max 0.030 inch

(2) Requirement
Latchlever endplay
Min some---Max 0.010 inch

To Adjust
Position reset arm with clamp screw loosened. Tighten screw.

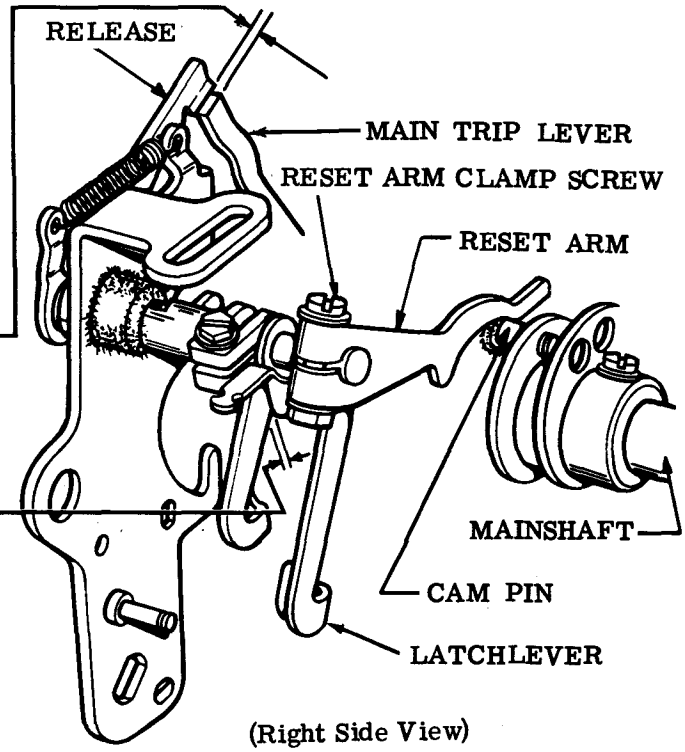

(Right Side View)

(B) FUNCTION CLUTCH LATCHLEVER SPRING

Requirement
With function clutch turned to stop positions and latchlever unlatched
Min 12 oz---Max 15 oz
to start latchlever moving.

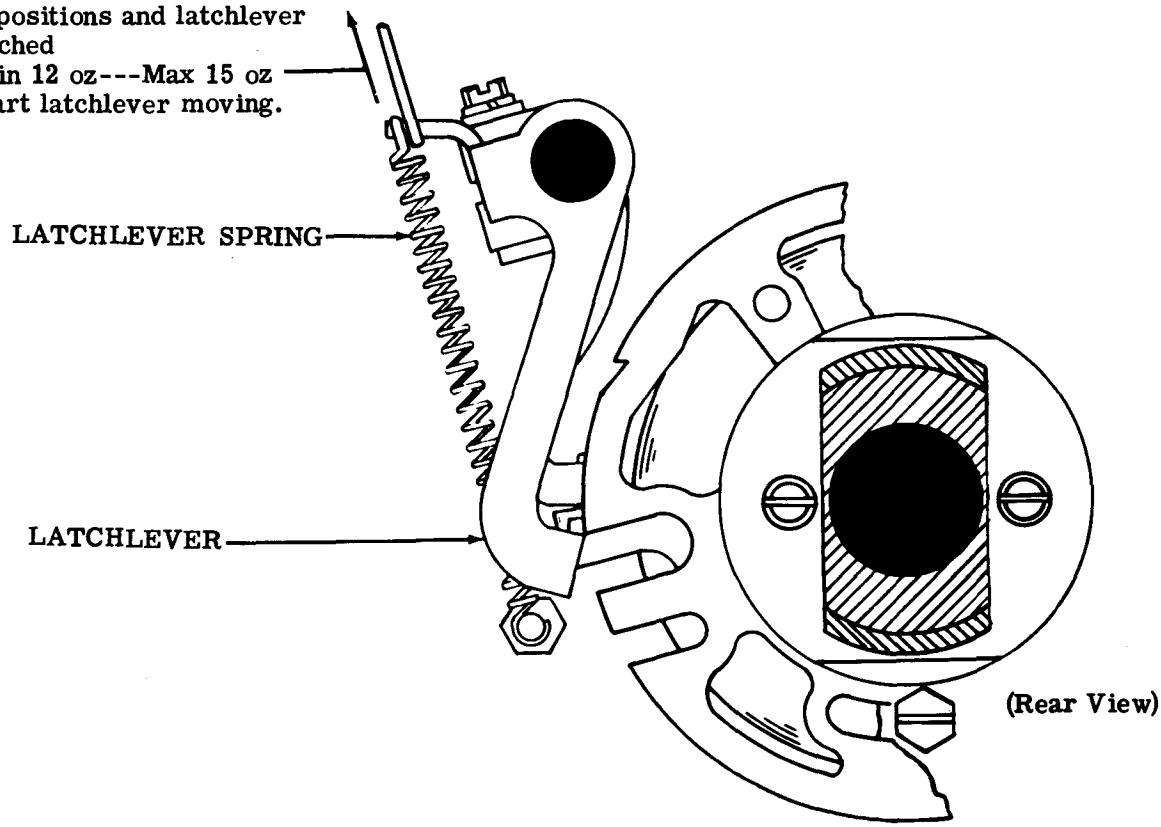

(Rear View)

2.20 Function Mechanism (continued)

(A) CAM FOLLOWER ROLLER

Requirement
With rocker bail positioned to its extreme left and upper roller in contact with function cam
Min some---Max 0.004 inch clearance between cam and lower roller at point of least clearance.

To Adjust
Position lower roller mounting screw in elongated slot with locknut loosened. Tighten nut.

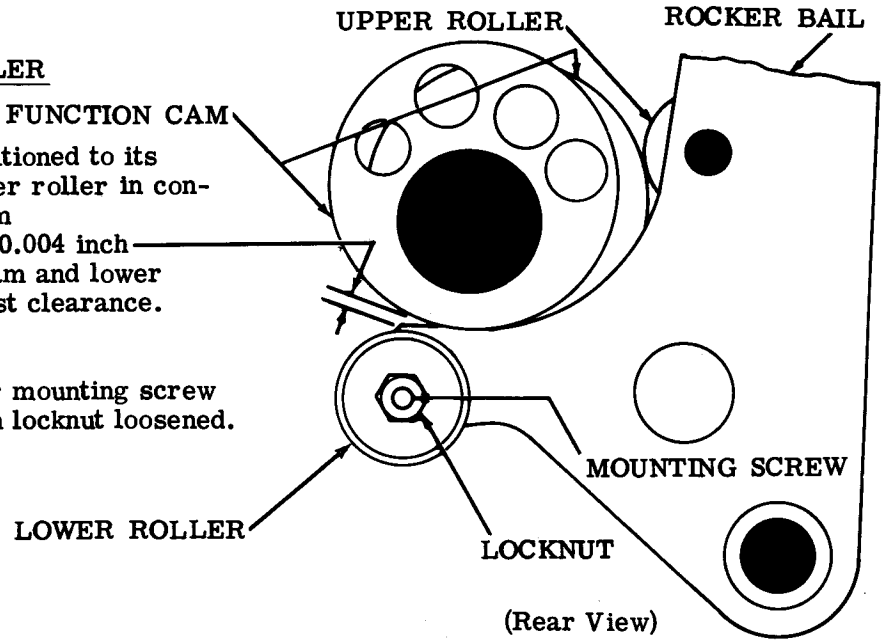

(Rear View)

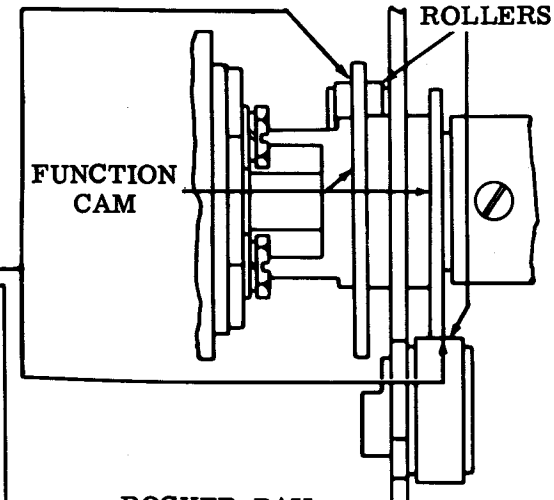

(B) CAM FOLLOWER ROLLER ALIGNMENT

(1) Requirement
Rocker bail rollers should engage full thickness of function cam.

(2) Requirement
Lifter roller in full engagement with rocker bail camming surface.

To Adjust
Position rocker bail and guide bracket with guide bracket mounting screws loosened. Tighten screws.

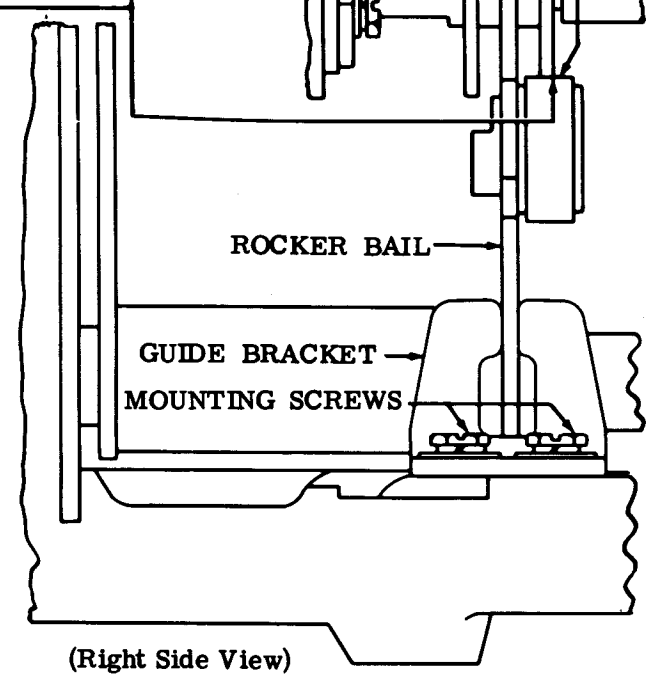

(Right Side View)

2.21 Function Mechanism (continued)

(A) FUNCTION CLUTCH RELEASE LEVER SPRING

Requirement
Trip function clutch. Rotate mainshaft until release is reset on reset bail trip lever.
Min 5 oz---Max 8 oz to start release moving.

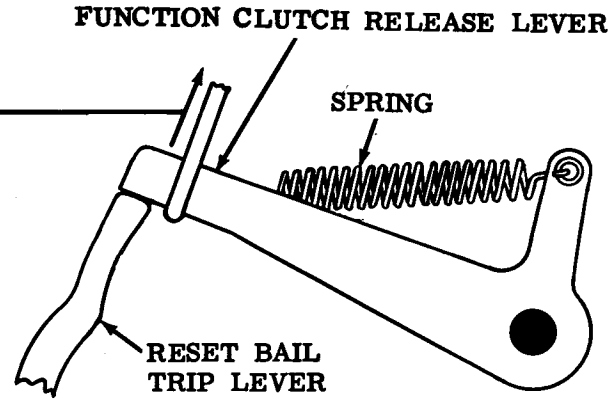

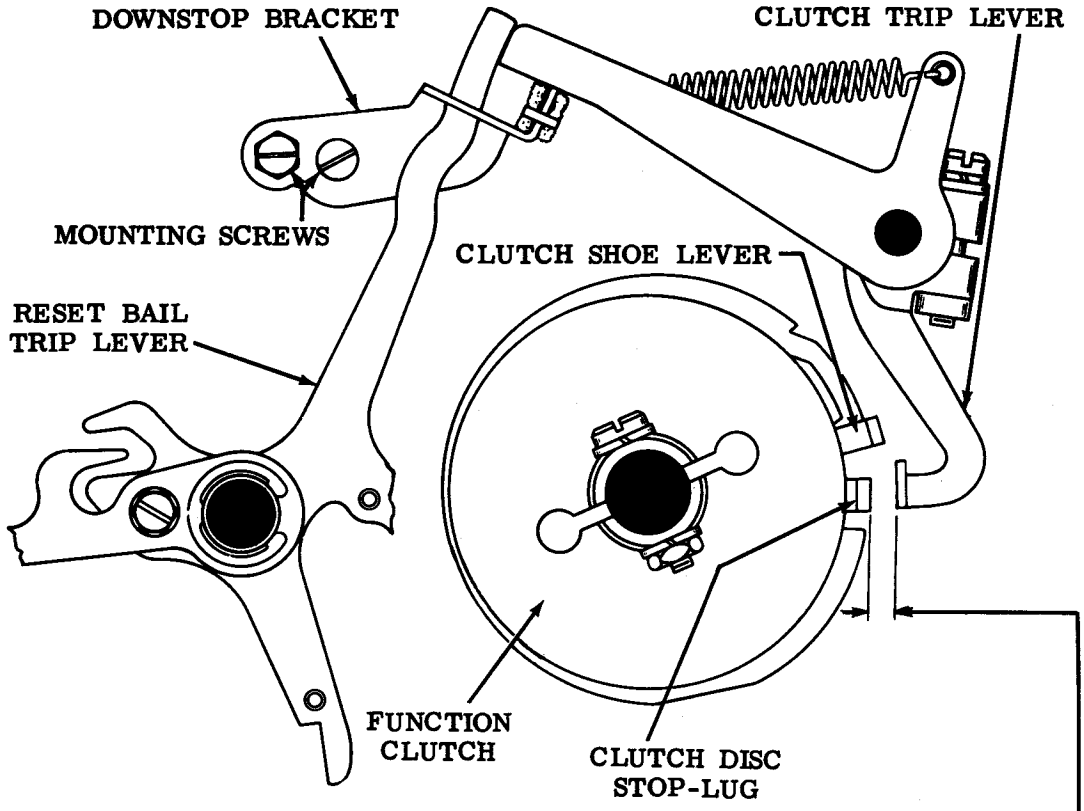

(B) RELEASE DOWNSTOP BRACKET

Requirement
With function clutch tripped, rotate shaft until clearance between function clutch disc stop-lug and clutch stop lever is at a minimum. Release lever resting against downstop bracket. Clearance between function clutch disc stop-lug and stop lever
Min 0.002 inch---Max 0.045 inch

To Adjust
Remove tape guide. With downstop bracket mounting screws friction tight position bracket. Tighten screws.

2.22 Punch Mechanism

PUNCH MOUNTING PLATE (Preliminary)

Requirement

The punch mechanism mounting screw, beneath punch block, and mounting screw at lower edge of punch mechanism backplate should be located centrally within their respective mounting holes.

Note: The mounting holes are oversize to facilitate use of punch mechanism on the typing reperforator.

To Adjust

Remove mounting screw at the lower edge of punch mechanism backplate. With the two remaining backplate mounting screws and mounting bracket screw friction tight, position punch mechanism so that the tapped hole of the frame is centrally located (as gauged by eye) within large body hole of punch mechanism backplate. Tighten the two backplate mounting screws and recheck to see that requirement is met. Replace and tighten the lower backplate mounting screw. Tighten the bracket mounting screw.

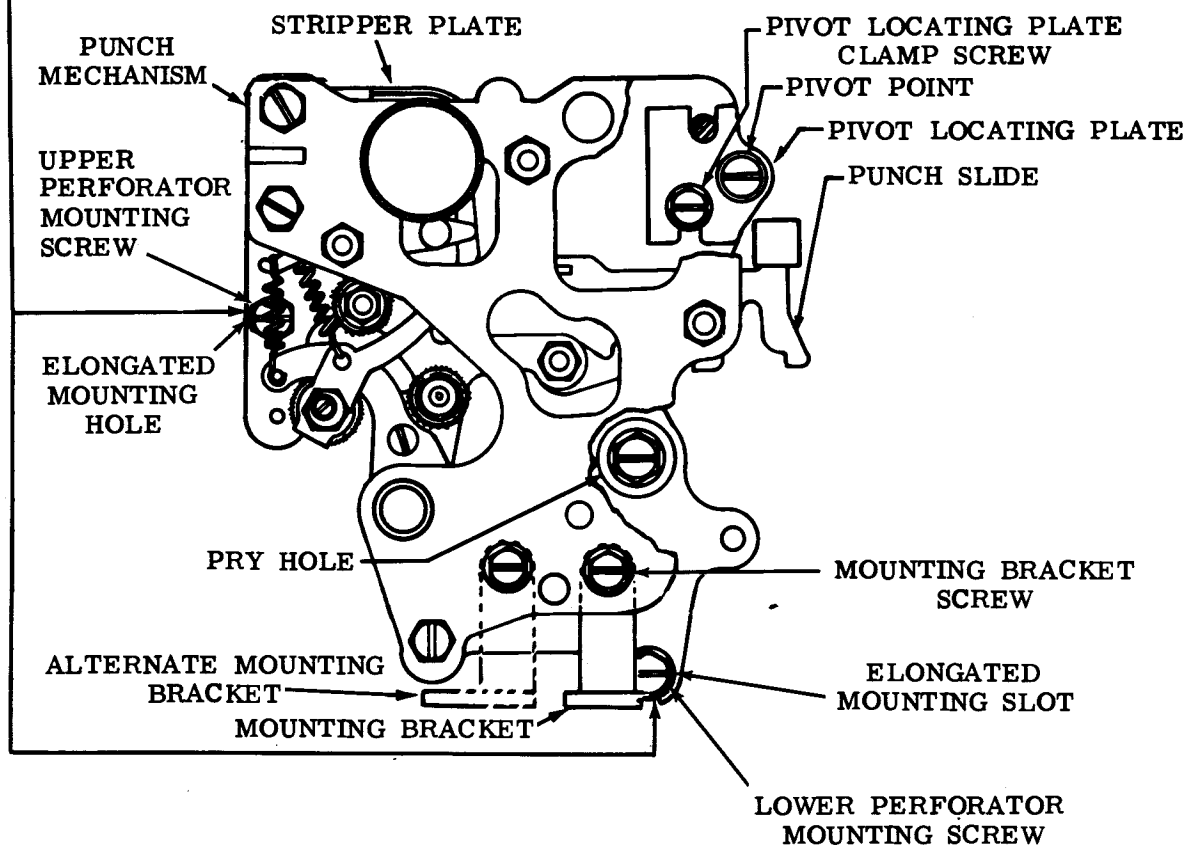

2.23 Punch Mechanism (continued)

Note: Before proceeding with the punch mechanism adjustments, check the CAM FOLLOWER ROLLER (2.20) adjustment and loosen the punch slide downstop mounting nut and guide mounting stud.

(A) TOGGLE BAIL ECCENTRIC (Preliminary)

Requirement
The indent (high side of eccentric) should be in its uppermost position.

To Adjust
With the toggle eccentric shaft locknut friction tight position eccentric. Tighten nut.

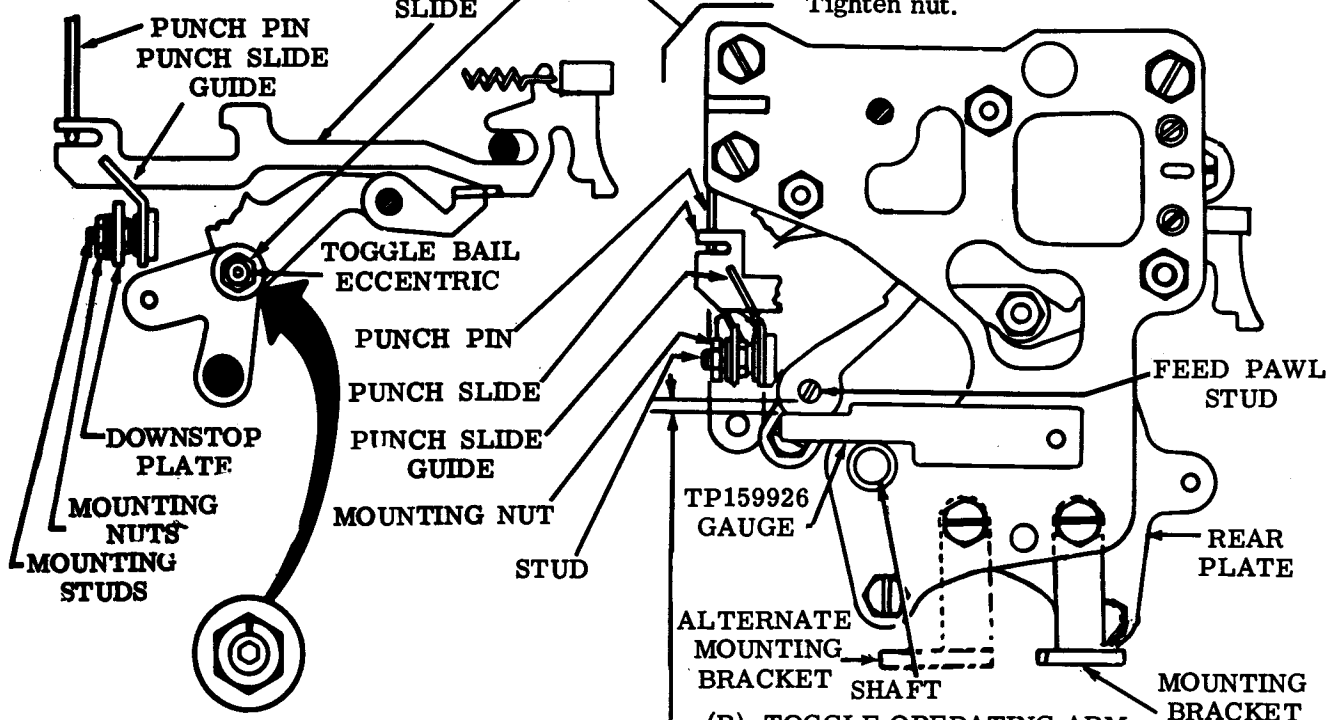

(B) TOGGLE OPERATING ARM

(1) Requirement
Trip function clutch and rotate main-shaft until the upper rocker bail roller is on high part of its cam.
Min 0.002 inch---Max 0.005 inch clearance between feed pawl stud and the TP159926 gauge.

(2) Requirement
Clearance between arm and oscillating shaft bearing hub.
Min 0.002 inch---Max 0.015 inch with play taken up in direction to make clearance minimum.

To Adjust
With clamp screw friction tight, position toggle bail and operating arm. Tighten screw.

Note: After FEED PAWL (2.27) adjustment has been made and PUNCH PIN PENETRATION (2.24) and FEED PAWL requirements are met, this requirement should be considered fulfilled.

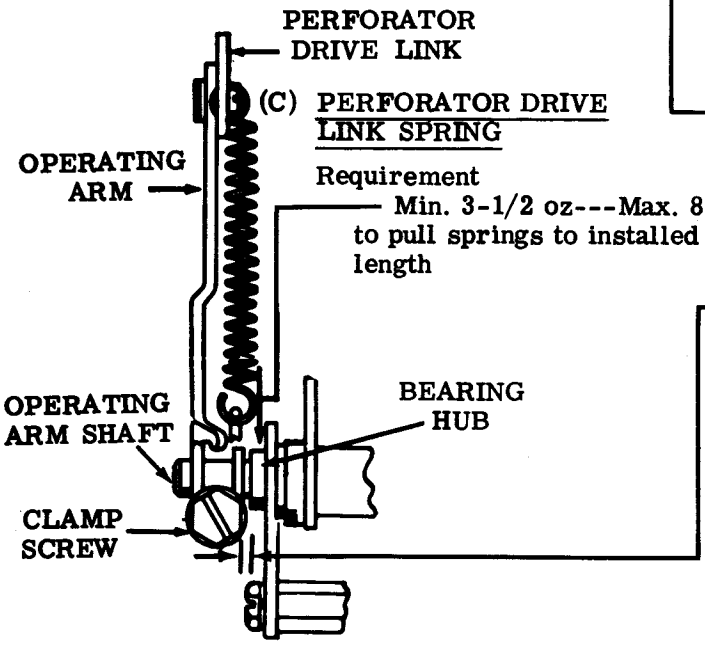

(C) PERFORATOR DRIVE LINK SPRING

Requirement
Min. 3-1/2 oz---Max. 8 oz. to pull springs to installed length

2.24 Punch Mechanism (continued)

(A) PUNCH PIN PENETRATION

(1) Requirement

With the RUBOUT combination selected, function clutch engaged, rotate mainshaft until all punch pins are into or above the tape aperture in punch block. With the TP159926 gauge in position

Min 0.050 inch

clearance between feed pawl stud and the gauge.

(2) Requirement

With RUBOUT combination selected, function clutch engaged, rotate mainshaft until all punch pins have cleared the punch block. With the TP159926 gauge in position

Min some---Max 0.080 inch

clearance between feed pawl stud and gauge.

To Adjust

Refine the TOGGLE BAIL ECCENTRIC (2.23) adjustment keeping the indent to the right of a vertical centerline through the shaft. Tighten nut.

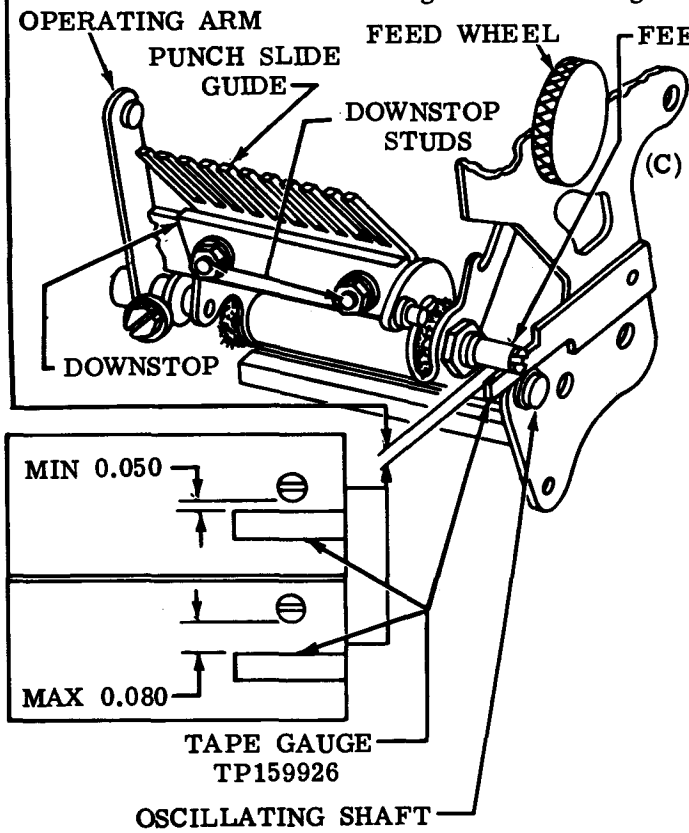

(B) PUNCH SLIDE GUIDE (Final)

Requirement

The punch slides should align with their corresponding punch pins and be free of binds after tightening the guide mounting studs. Each punch slide should return freely after being pushed in not more than 1/16 inch.

To Adjust

Position the guide with its mounting studs friction tight. Tighten studs.

(C) PUNCH SLIDE DOWNSTOP POSITION

Requirement

With function clutch disengaged and latched, play taken up toward the top, clearance between both the front and rear punch slides and the downstop plate

Min some---Max 0.008 inch

All other punch slides should have some clearance.

Note: To check for some clearance, place unit in stop position, trip function trip mechanism and latches. The punch slides should move fully to their operated position.

To Adjust

With unit in stop position, loosen the two downstop plate mounting locknuts and locate the downstop plate to meet the requirement.

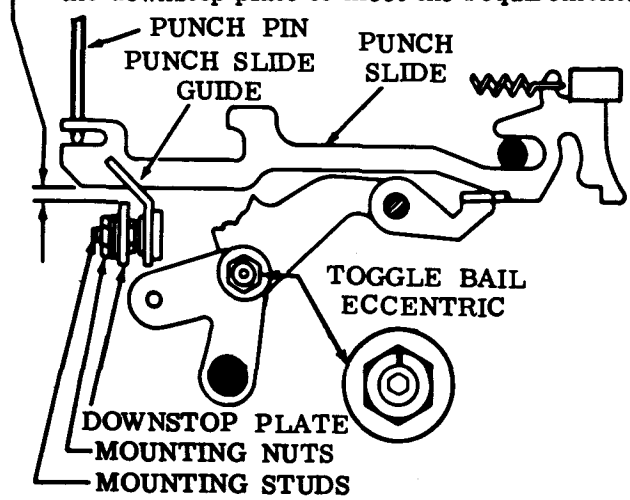

2.25 Punch Mechanism (continued)

PUNCH MOUNTING PLATE (Final)

(1) To Check

Select RUBOUT code combination (12345678). Rotate until function clutch trips with punch levers in extreme left-hand position.

Requirement

Clearance between punch slide and punch slide latch

Min 0.015 inch---Max 0.045 inch

at slide where clearance is least.

To Adjust

Loosen perforator mounting screws, adjusting clamp lockscrew, adjusting clamp pivot screw, and anchor bracket screw until friction tight. Place tip of screwdriver between screw and rim of pry hole and pry perforator up or down. Tighten only adjusting clamp lockscrew.

(2) To Check

Remove ribbon and tape. With unit in stop position and upper no. 7 pushbar to the right, check clearance between rear leg of stripper plate and type wheel. Select the R code combination (-2-5-78), trip the function clutch, and move rocker bail to its extreme left position. Check clearance between front leg of the stripper plate and type wheel.

Requirement

Clearance between the character P and the front or rear leg of stripper plate (whichever has the least clearance) should be

Min 0.075 inch---Max 0.085 inch

To Adjust

Position perforator with two mounting screws, adjusting clamp pivot screw, and anchor bracket screw friction tight. Tighten screws. Check RESET BAIL TRIP LEVER (2.26) requirement for some clearance and adjust if necessary.

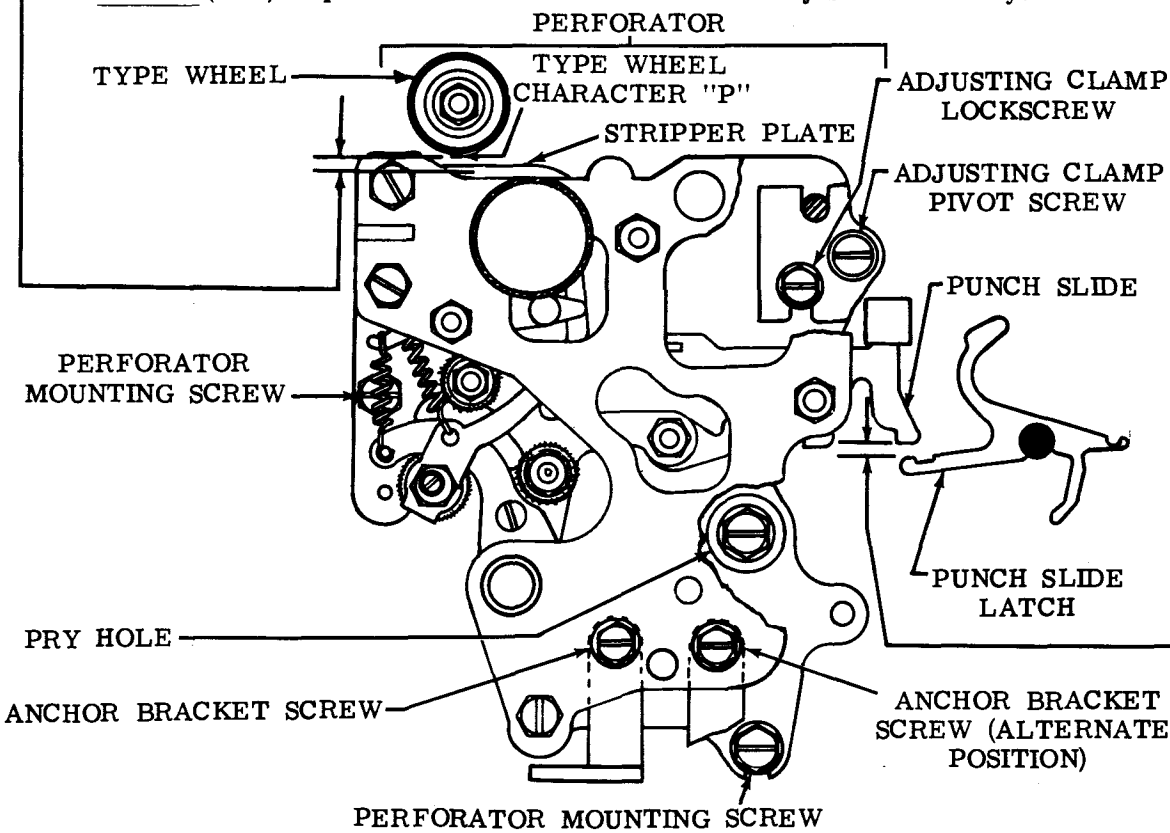

2.26 Punch Mechanism (continued)

RESET BAIL TRIP LEVER (Final)

(1) Requirement

Manually select the NULL code combination. Manually rotate reset bail trip lever. The punch slide reset bail should trip before the function clutch is tripped.

To Adjust

With trip lever extension lockscrew friction tight and RUBOUT combination selected, position reset bail against punch slides. Take up play between reset bail and trip lever in a counterclockwise direction. Position trip lever by means of its pry point. Tighten screw.

(2) Requirement

With function and selector clutches disengaged and latched, the punch slide reset bail should fully engage the punch slide latching surface when play in parts is taken up in direction to make the engagement the least.

To Adjust

Recheck requirement (1) above and refine adjustment if necessary.

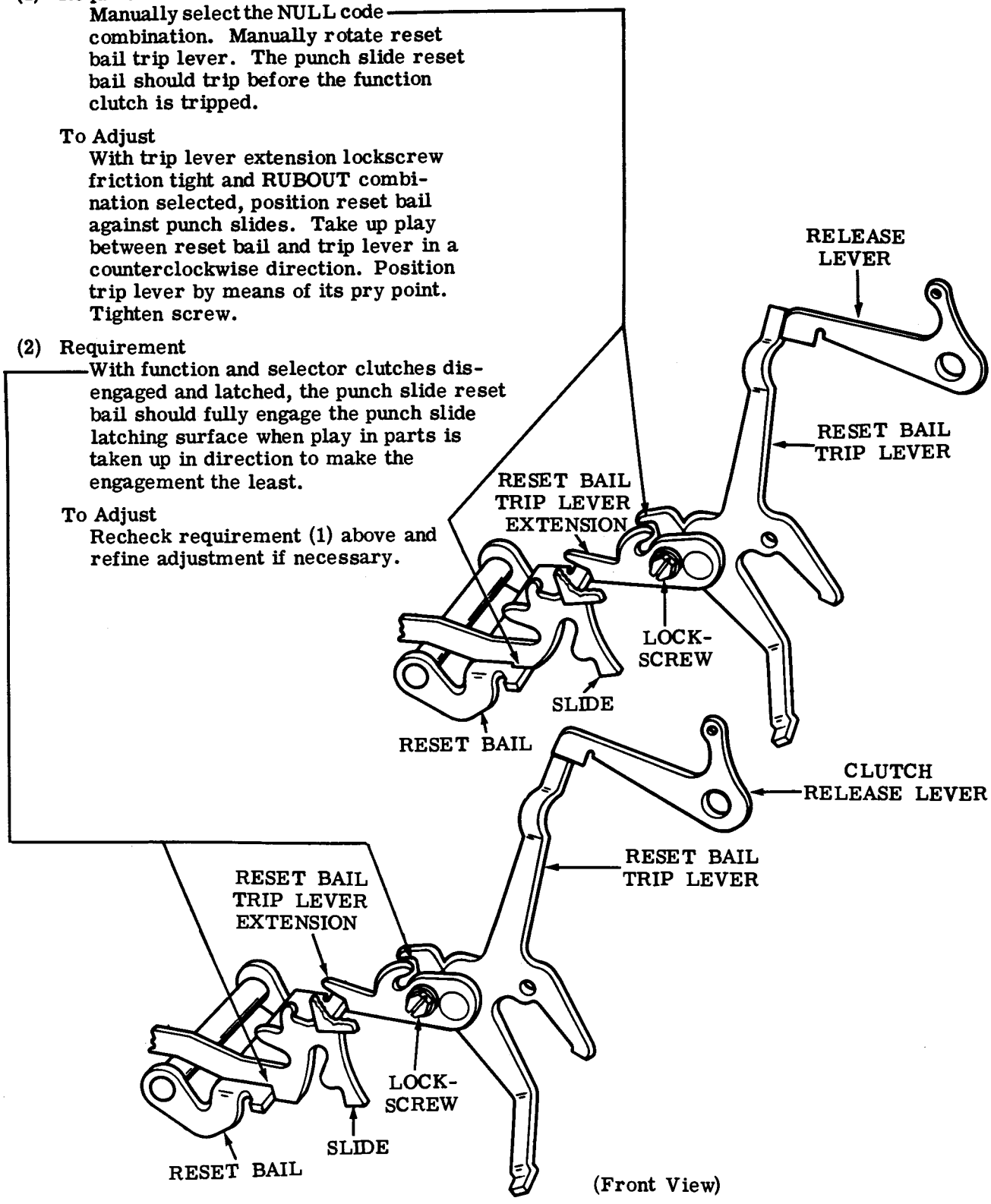

2.27 Punch Mechanism (continued)

(A) LATCHLEVER CLEARANCE

Requirement

With NULL combination selected, the function clutch disengaged and latched, clearance between the punch slide and its associated latchlever should be

Min 0.008 inch---Max 0.020 inch

for the slide having the least clearance.

To Adjust

Rotate the reset bail eccentric shaft with its locknut loosened. Keep the indentation in the eccentric above center of shaft. Tighten locknut.

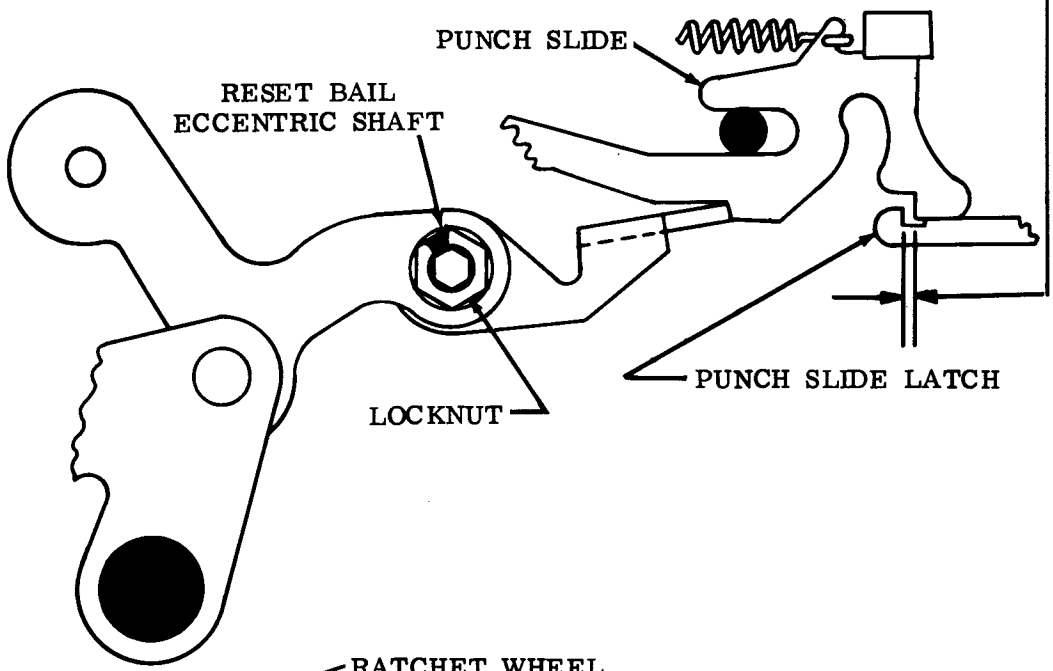

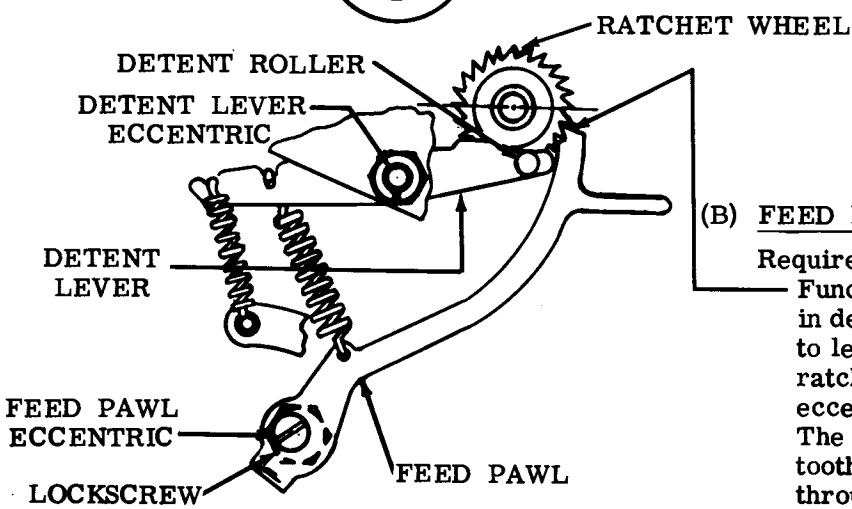

(B) FEED PAWL

Requirement

Function clutch disengaged, indentation in detent lever eccentric at right angle to lever, detent roller in contact with ratchet wheel, high part of feed pawl eccentric to the right of its lockscrew. The feed pawl should engage the first tooth below a horizontal centerline through the ratchet wheel with no perceptible clearance.

To Adjust

Rotate the feed pawl eccentric with lockscrew loosened. Tighten screw.

Note: This adjustment is related to TEN CHARACTERS PER INCH (2.28), and two adjustments should be made at same time.

2.28 Punch Mechanism (continued)

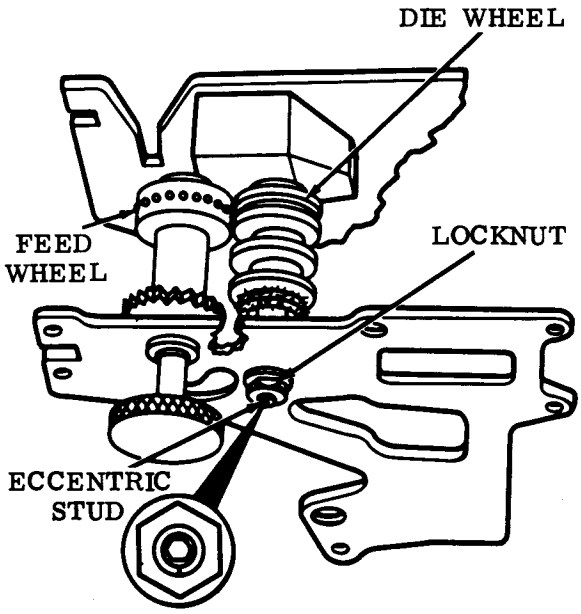

TEN CHARACTERS PER INCH (Preliminary)

(1) Requirement

Indent of die wheel eccentric stud point ing downward.

To Adjust

Position die wheel eccentric stud with locknut loosened. Tighten nut.

(2) Requirement

With tape shoe blocked away from feed wheel, feed pawl and detent disengaged, and tape removed, feed wheel should rotate freely. Check through 3 or 4 revolutions of feed wheel. Refine requirement (1) above if necessary to meet this requirement.

Note: Before proceeding with the following adjustment check both BIAS SPRING (2.31) tensions, and if unit is equipped with a slack tape mechanism having a clamp plate with an adjustable wear disc, loosen the mounting nut and turn a new edge of the disc toward the tape. Tighten nut.

REPERFORATOR MOUNTING

Requirement

Mount the reperforator to the base and adjust in accordance with the associated base section.

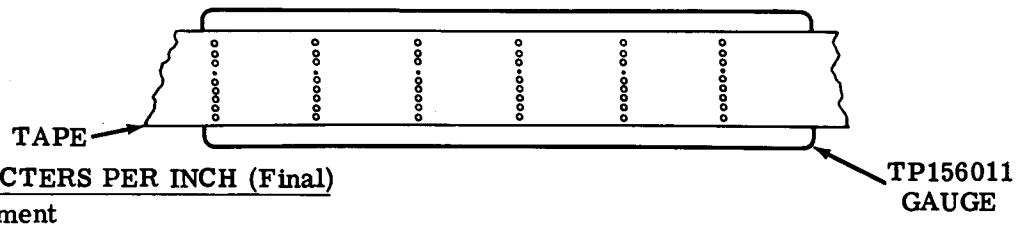

TEN CHARACTERS PER INCH (Final)

(1) Requirement

With a piece of tape perforated with six series of 9 NULL code combinations followed by a rubout combination placed over the smooth side of the TP156011 tape gauge so that the circular portion of the first number 2 code hole in the tape is concentric with the first hole of the tape gauge, the next four holes in the tape gauge should be visible through the number 2 code holes in the tape and the circular portion of the last (sixth) number 2 code hole in the tape should be entirely within the 0.086 diameter hole of the tape gauge.

(2) Requirement

With tape shoe held away from feed wheel, feed pawl and detent disengaged and tape removed, feed wheel should rotate freely.

To Adjust

With tape removed from punch mechanism, loosen eccentric locknut and rotate die wheel eccentric shaft until it binds against feed wheel. Back off eccentric until die wheel is just free. Check through 3 or 4 rotations. Keep the indent of eccentric below the horizontal centerline of the stud. Refine adjustment for requirement (1), if necessary, by moving the die wheel toward the feed wheel to decrease the character spacing and away from the feed wheel to increase the character spacing. Tighten nut.

CAUTION: WITH TAPE REMOVED. MAKE SURE FEED WHEEL AND DIE WHEEL DO NOT BIND. RECHECK REQUIREMENT (1). IF NECESSARY, REFINE.

Note: First through fifth holes in gauge are same size as code holes in tape (0.072 inch diameter). Sixth hole in gauge is larger (0.086 inch). This arrangement allows ±0.007 inch variation in 5 inches.

2.29 Punch Mechanism (continued)

(For Latest Design see 2.30)

LATERAL AND FRONT TO REAR FEED WHEEL POSITION DETENT (Early Design)

Requirement

With the reperforator operating under power, obtain a tape sample consisting of a series of NULL perforations, by a visual inspection of the perforated feed holes, laterally and front to rear, the indentations of the feed wheel should be fully punched out.

(1) To Adjust (Laterally)

To meet the lateral requirement, loosen the detent eccentric stud locknut and rotate the detent eccentric clockwise to move the feed wheel perforations towards the lead edge of the feed hole. Rotate the detent eccentric counterclockwise to move the feed wheel perforation towards the trailing edge of the feed hole. Tighten nut. Refine the feed pawl adjustment.

(2) To Adjust (Front to Rear)

To meet the front to rear requirement with respect to the reference edge of the tape, loosen the adjusting screw locknut and position the adjusting screw. To move the indentations in the tape away from the reference edge of the tape, move the feed wheel towards the front plate of the punch mechanism by rotating the adjusting screw counterclockwise. To move the indentations in the tape towards the reference edge of the tape, move the feed wheel towards the backplate of the punch mechanism by rotating the adjusting screw clockwise. Tighten nut. Refine the adjustment above to align the lateral indentations of the feed wheel if required.

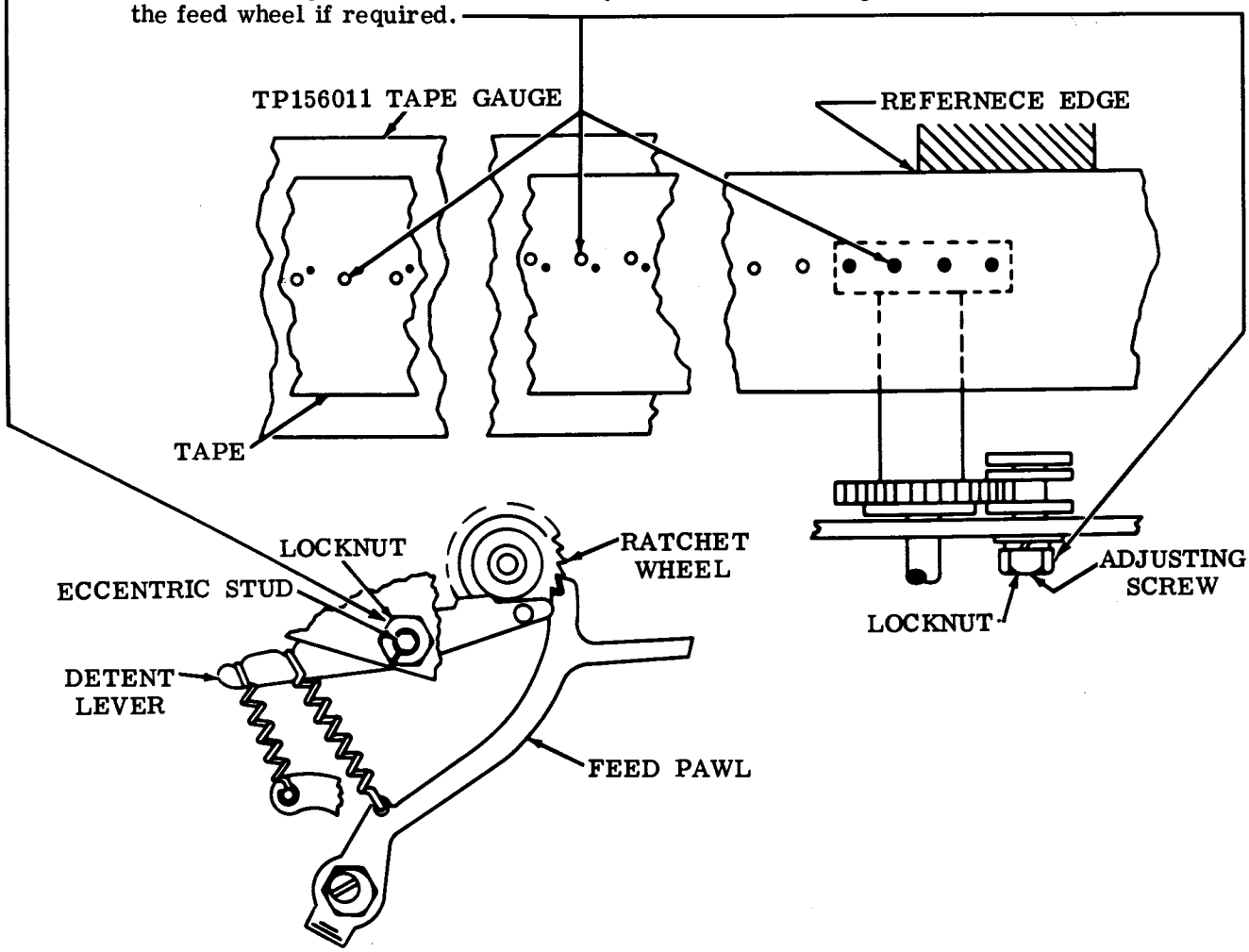

2.30 Punch Mechanism (continued)

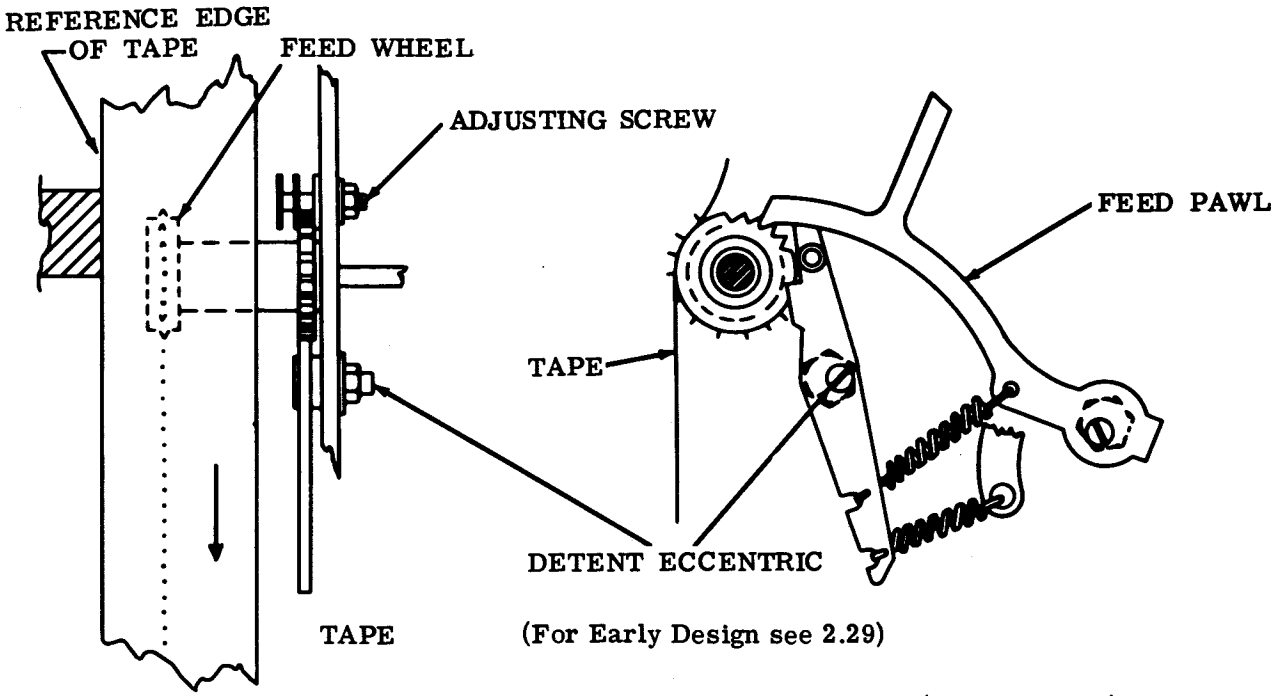

LATERAL AND FRONT TO REAR FEED WHEEL POSITION DETENT (Latest Design)

Requirement

The indentations punched by the feed wheel should be centrally located between the punched feed holes (gauged by eye) and on same horizontal centerline. The unit must backspace the tape at least 30 characters without losing its point of registration.

To Check

Perforate 6 inches of RY tape. Backspace 30 characters. Reperforate with RUBOUT characters. Code holes must coincide except for first two characters which may be elongated ±0.010 inch.

To Adjust (Laterally)

Rotate detent eccentric clockwise to move the feed wheel perforation toward the leading edge of the feed hole and rotate eccentric counterclockwise to move the perforation toward the trailing edge of the feed hole. Tighten locknut. Refine FEED PAWL (2.27) adjustment if necessary.

To Adjust (Front to Rear)

Loosen locknut on adjusting screw and rotate the screw counterclockwise to move the indentations in the tape away from the reference edge (rear) of the tape. To move indentations in the tape toward the reference edge of the tape, rotate adjusting screw clockwise. Tighten nut. Refine the lateral adjustment above if necessary.

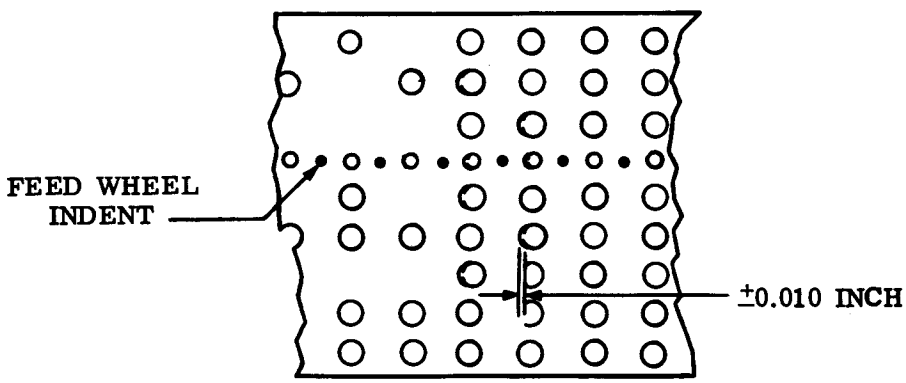

2.31 Punch Mechanism (continued)

PUNCH SLIDE SPRING

Requirement
RUBOUT combination set up, and punch slides in selected position
Min 2-1/4 oz---Max 3-1/4 oz
to start each slide moving.

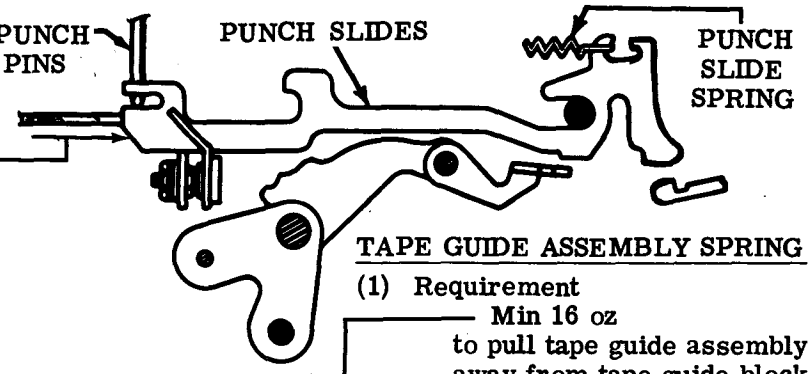

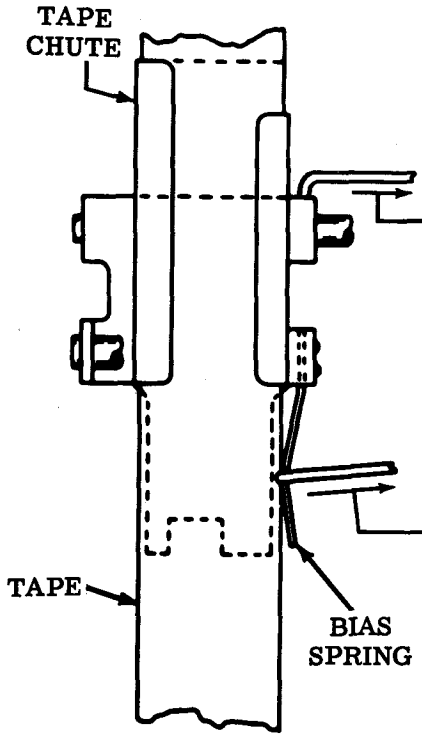

TAPE GUIDE ASSEMBLY SPRING

(1) Requirement
Min 16 oz
to pull tape guide assembly away from tape guide block.

(2) Requirement
Tape guide assembly should move freely on shaft.

To Adjust
With mounting screws loosened, position mounting post. Tighten screws.

BIAS SPRING (TAPE CHUTE)

Requirement
With selector and function clutches disengaged and latched, tape threaded through punch mechanism, it should require
Min 1-1/4 oz---Max 2-1/4 oz
to just move the spring away from the tape.

To Adjust
Bend the spring.

Note: It is necessary to remove several parts, on units equipped with backspace mechanism, in order to check this spring tension. It should not be checked unless there is good reason to believe that requirements are not met.

BIAS SPRING (PUNCH BLOCK)

(1) Requirement
With tape removed from the punch block, the tape guide spring should rest against the clearance slot in the block in a symetrical manner.

(2) Requirement
With tape in the punch block and the reperforator operating under power, the spring should not distort the edge of the tape.

To Adjust
Bend the spring and position it with its mounting screw loosened. Tighten screw.

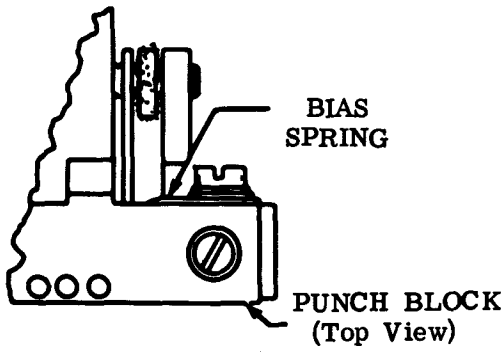

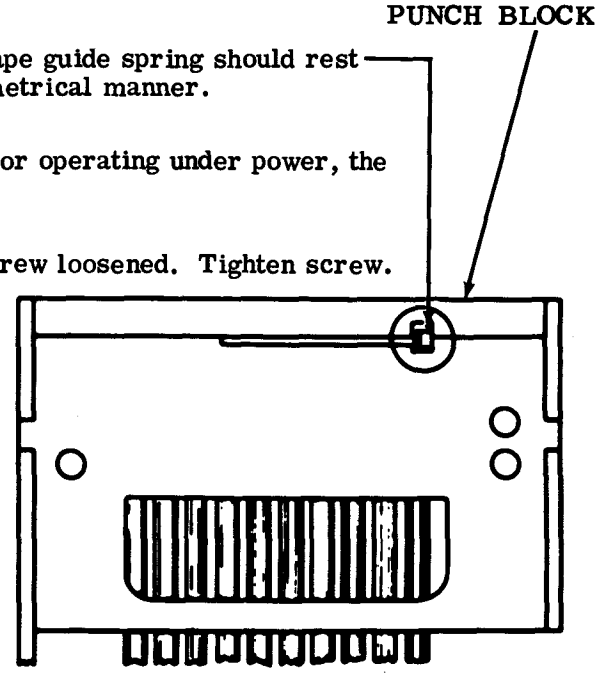

2.32 Punch Mechanism (continued)

FEED PAWL SPRING

Requirement
Function clutch disengaged and latched.
Detent spring unhooked from toggle bail
Min 3 oz---Max 4-1/2 oz
to start the detent lever moving.

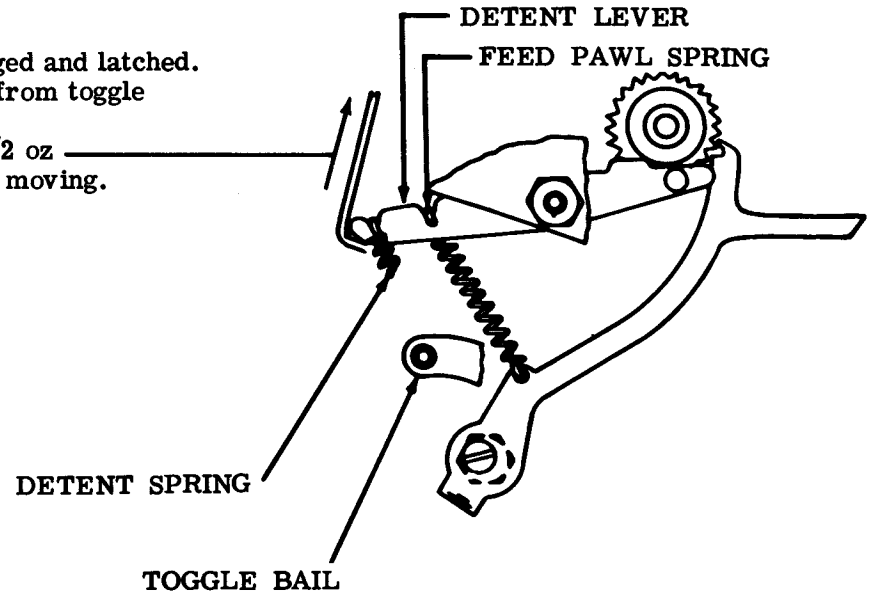

DETENT LEVER SPRING

Requirement
Function clutch disengaged and latched.
Feed pawl spring unhooked.
Min 7 oz---Max 10 oz
to start the detent lever moving.

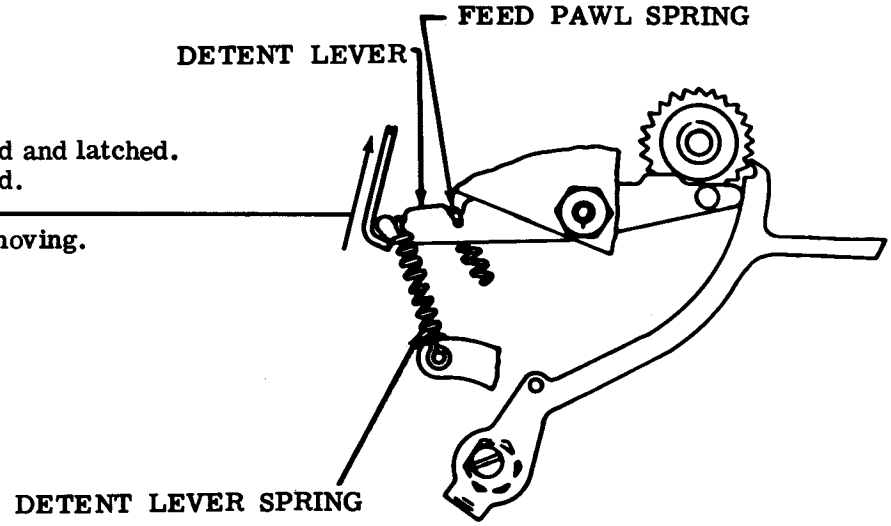

2.33 Punch Mechanism (continued)

TAPE SHOE TORSION SPRING

Requirement
Min 13 oz---Max 18 oz
to move tape shoe from feed wheel.

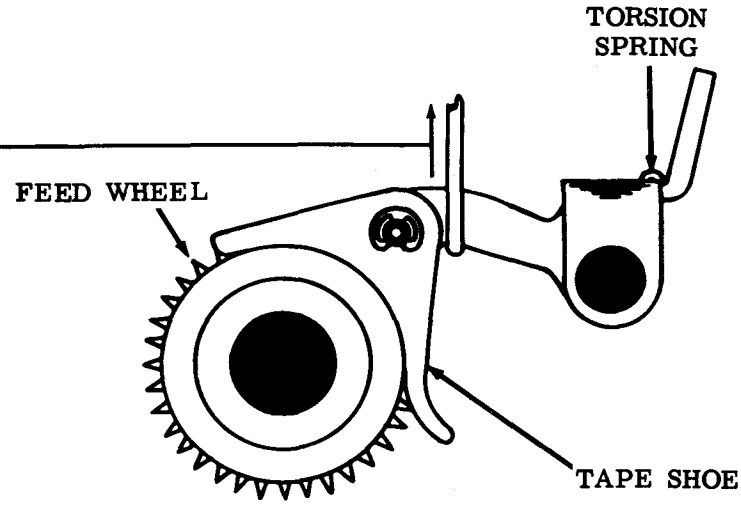

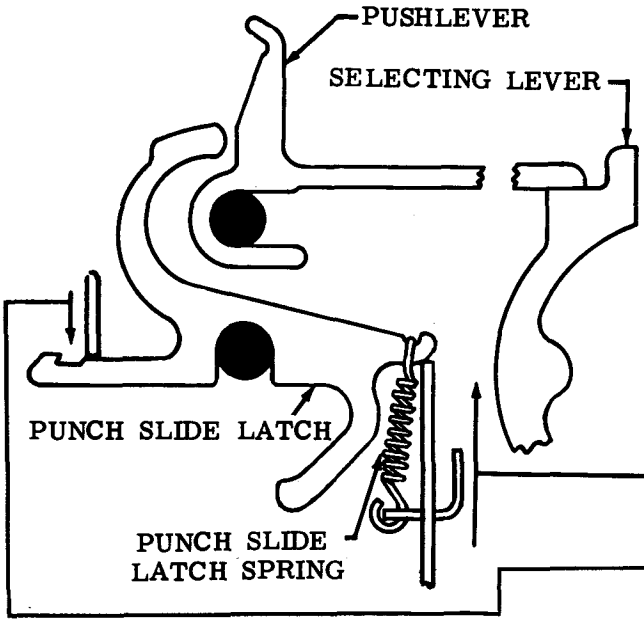

PUNCH SLIDE LATCH SPRING

To Check
Select RUBOUT code combination (12345678). Position rocker bail to extreme left. Strip pushlevers from selecting levers.

Requirement
For one-shaft unit
Min 1 oz---Max 3 oz
to start latch moving.
For two-shaft unit
Min 3/4 oz---Max 2 oz
to start latch moving.

2.34 Typing Mechanism

(A) PUSHBAR OPERATING BLADE (Preliminary)

To Check

Manually select RUBOUT code combination (12345678). Rotate mainshaft until function clutch trips. Hold no. 2 and 3 bellcranks against stop post.

Requirement

Operating blade parallel to (not necessarily flush with) no. 2 and 3 pushbars.

To Adjust

With its mounting screws friction tight, pry transfer mounting bracket all the way to the right. Tighten screws. Add or remove shims under the rear leg of the operating blade. Place extra shims on rear mounting screw between blade and flat washer. Tighten screws.

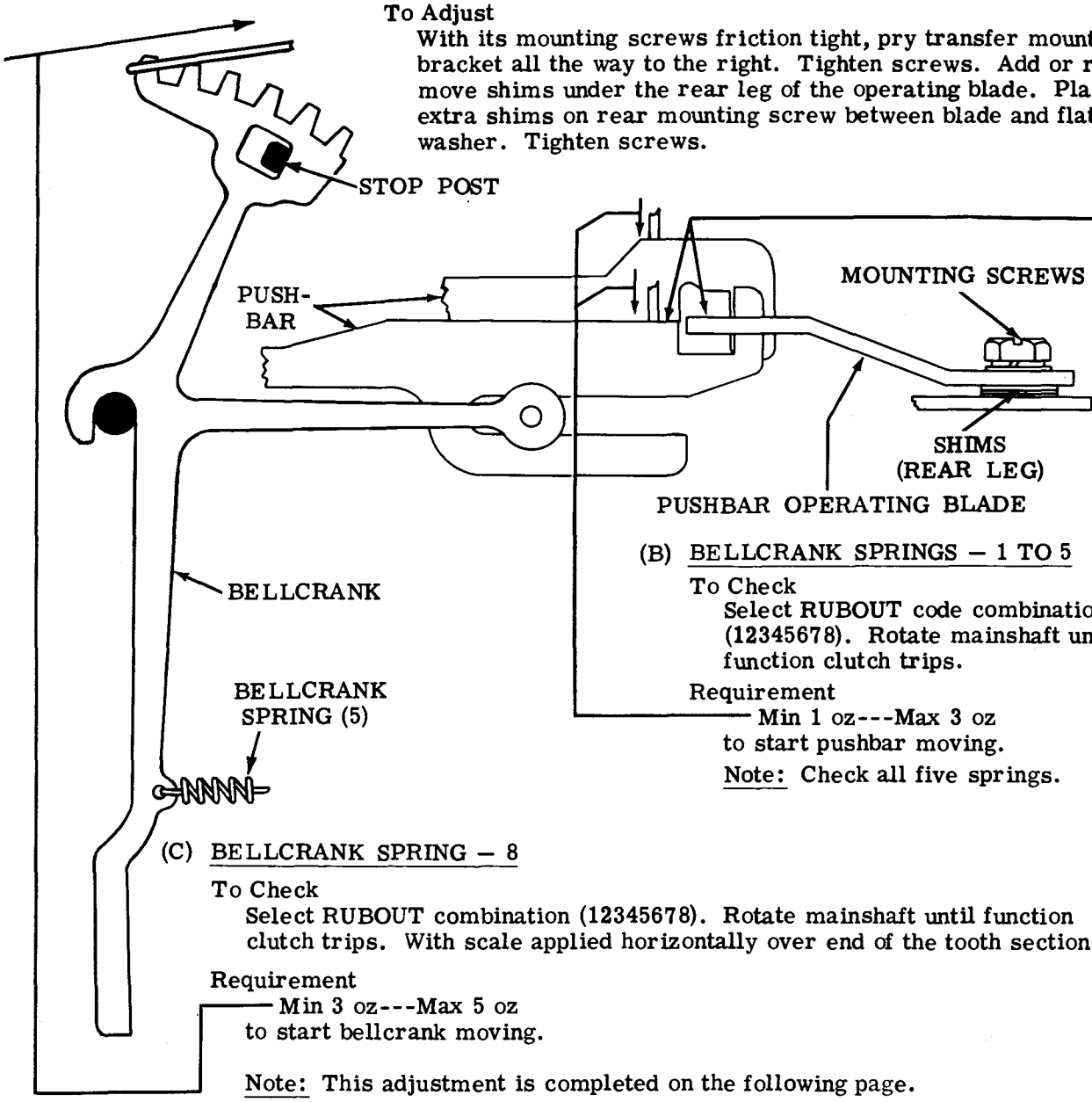

(B) BELLCRANK SPRINGS – 1 TO 5

To Check

Select RUBOUT code combination (12345678). Rotate mainshaft until function clutch trips.

Requirement

Min 1 oz---Max 3 oz to start pushbar moving.

Note: Check all five springs.

(C) BELLCRANK SPRING – 8

To Check

Select RUBOUT combination (12345678). Rotate mainshaft until function clutch trips. With scale applied horizontally over end of the tooth section.

Requirement

Min 3 oz---Max 5 oz to start bellcrank moving.

Note: This adjustment is completed on the following page.

2.35 Typing Mechanism (continued)

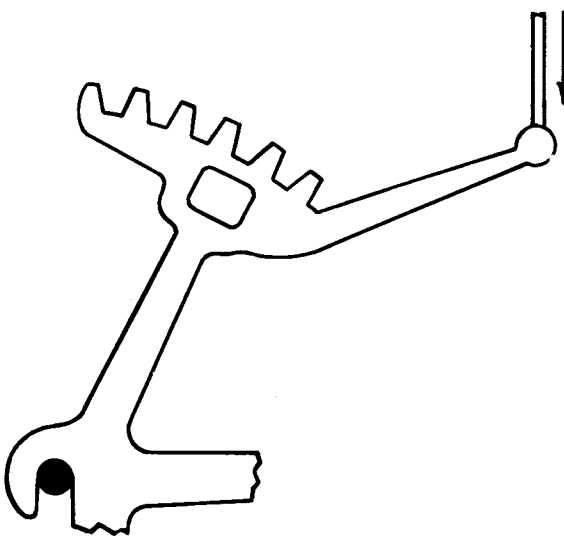

(D) BELLCRANK SPRINGS – 6 AND 7

To Check
Select RUBOUT combination (12345678).
Rotate mainshaft until function clutch trips.

(1) Requirement (Bellcrank Spring 6)
With scale applied vertically to ball end of bellcrank contact operating arm
Min 2 oz---Max 4 oz
to start bellcrank moving.

(2) Requirement (Bellcrank Spring 7)
With seven-pulse beam spring removed and scale applied vertically to ball end of bellcrank operating arm
Min 3 oz---Max 6 oz
to start bellcrank moving.

SHOULDER CLEARANCE

To Check
Manually select RUBOUT code combination (12345678). Rotate mainshaft until function clutch trips. Manually seat pushbars in detented position. In bar which is nearest left edge of blade, take up play to left and rear, and then release.

(1) Requirement
Clearance between bar and left edge of blade
Min 0.015 inch---Max 0.030 inch

(2) Requirement
Some clearance between right edge of blade and pushbars when play in bars has been taken up to right and released.

(3) Requirement
With unit in stop position, some clearance between right edge of blade and bars when play in bars has been taken up to right and released.

To Adjust
With mounting screws loosened, position operating blade in elongated holes. Tighten screws.

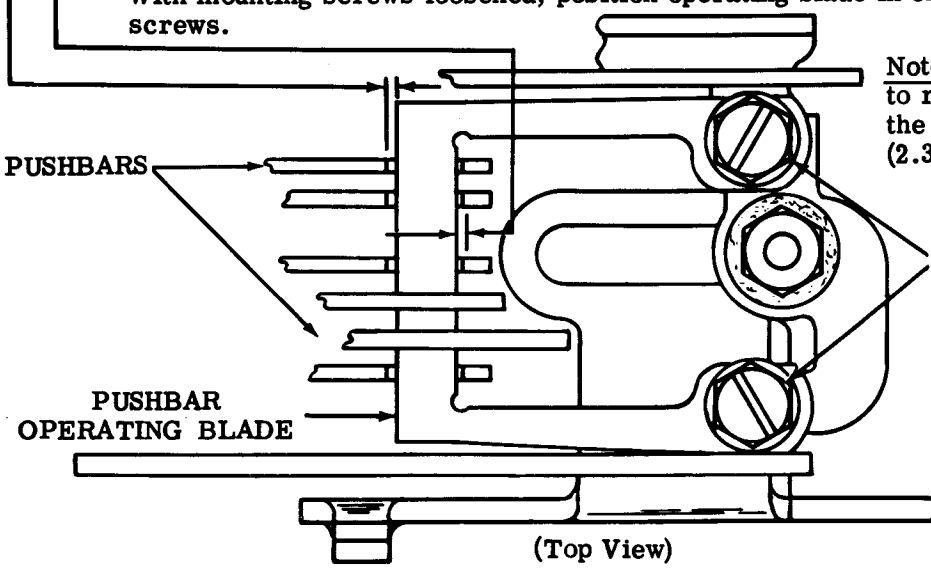

Note: It may be necessary to refine this adjustment after the CENTERING CLEARANCE (2.36) adjustment.

2.36 Typing Mechanism (continued)

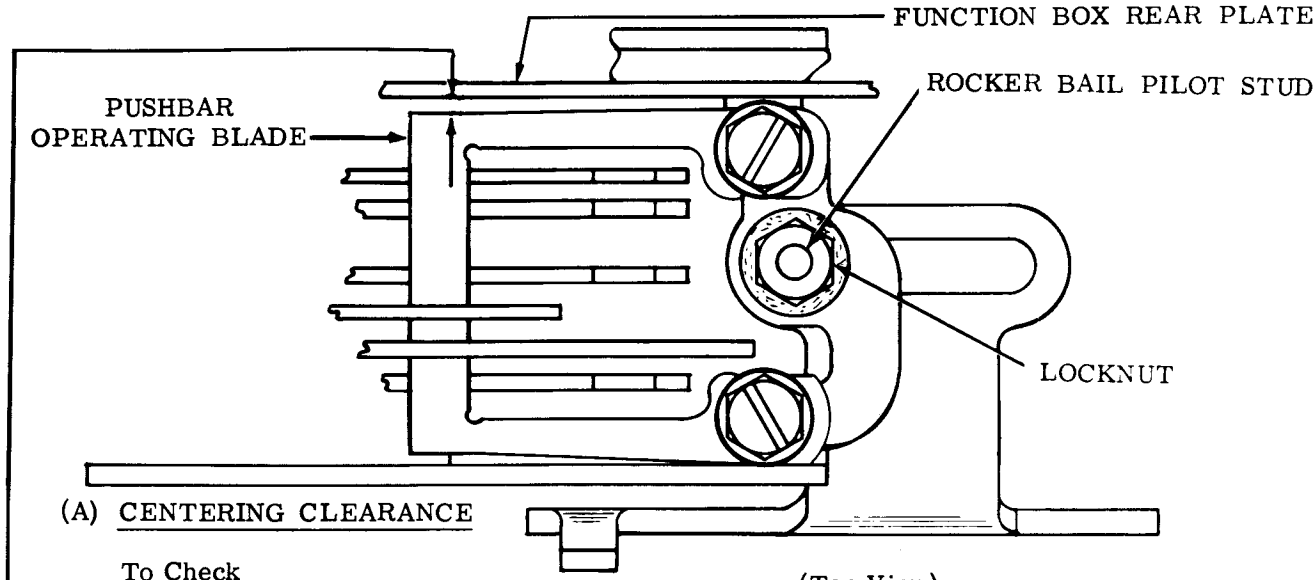

(Top View)

(A) CENTERING CLEARANCE

To Check
Select NULL combination. Position rocker bail through a complete cycle to insure the clearance is a minimum.

Requirement
Clearance between function box rear plate and pushbar operating blade
Min 0.005 inch---Max 0.020 inch
at a point in the cycle where play is taken up to make clearance minimum.

To Adjust
Position rocker bail pilot stud in elongated hole with locknut loosened. Tighten nut.

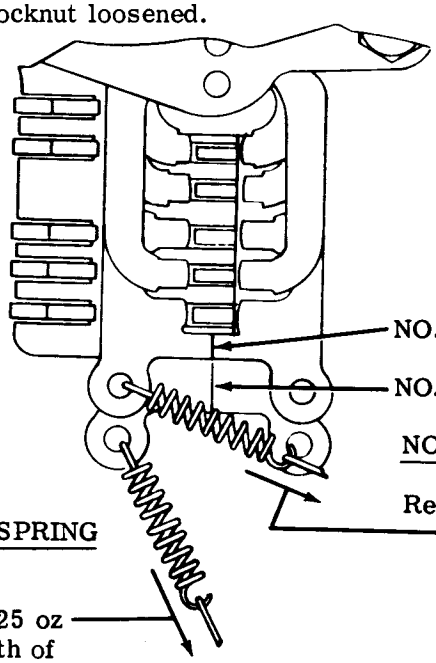

(Top View)

NO. 7 PULSE LEVER

NO. 5 PULSE LEVER

NO. 5 PULSE LEVER SPRING

Requirement
Min 10 oz---Max 15 oz to pull spring to length of 7/16 inch.

NO. 7 PULSE LEVER SPRING

Requirement
Min 20 oz---Max 25 oz to pull spring to length of 7/16 inch.

2.37 Typing Mechanism (continued)

FUNCTION BOX

Requirement

With letters pushbar to extreme right and fully detented, RUBOUT code (12345678) selected, punch slides disengaged and function clutched tripped, eliminate play in downward direction, then release. Keep operating blade parallel with no. 2 and no. 3 pushbars and take up function box play in a clockwise direction. The top of the operating blade should be Min flush---Max 0.020 inch above top rubout pushbars.

(1) To Adjust

Loosen the two screws mounting function box to spacer posts on front plate and set pry point in center of the cutout.

(2) To Adjust

Loosen the two screws which mount guide to the bracket and position guide to meet above requirement. Tighten screws.

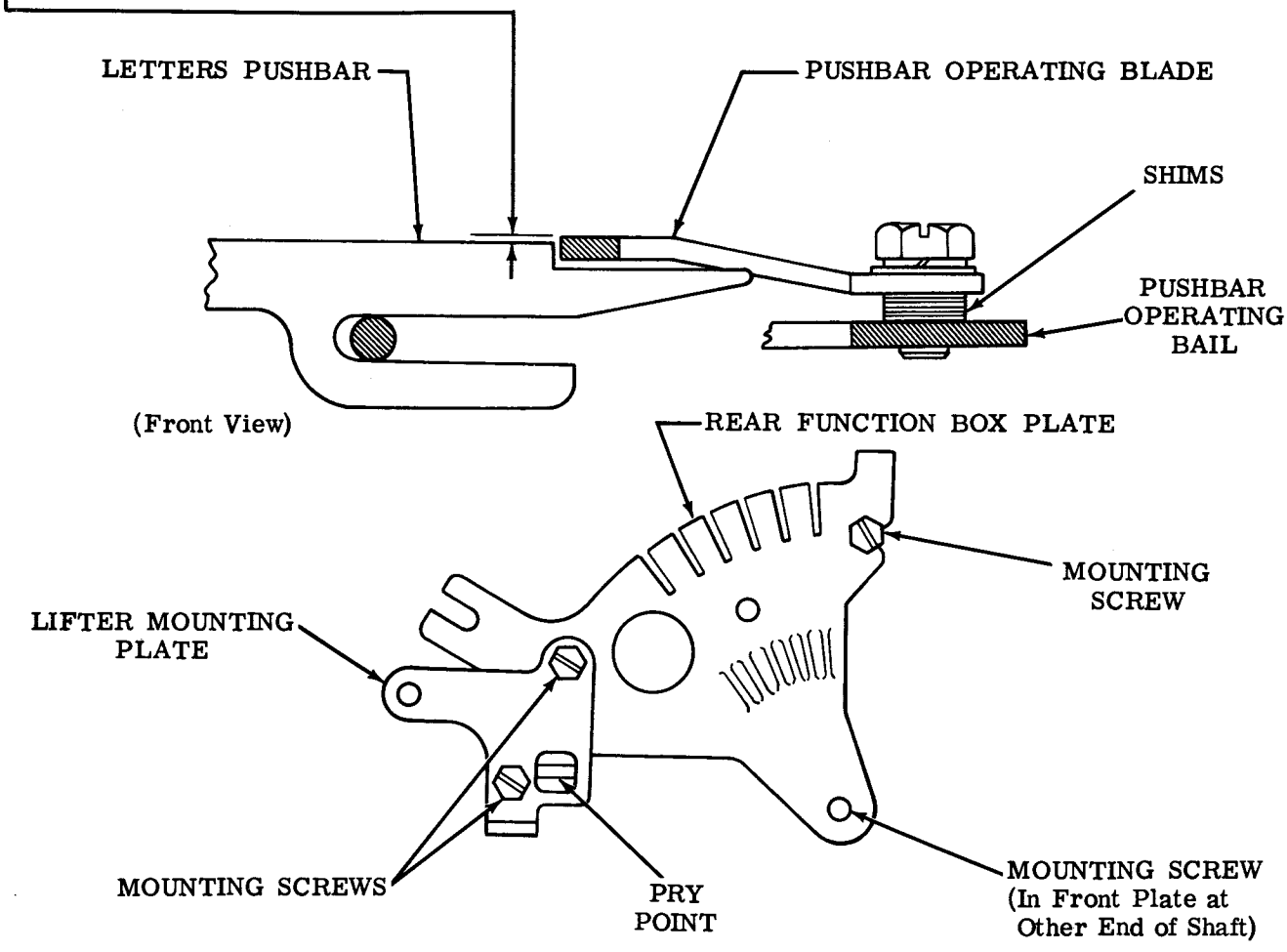

2.38 Typing Mechanism (continued)

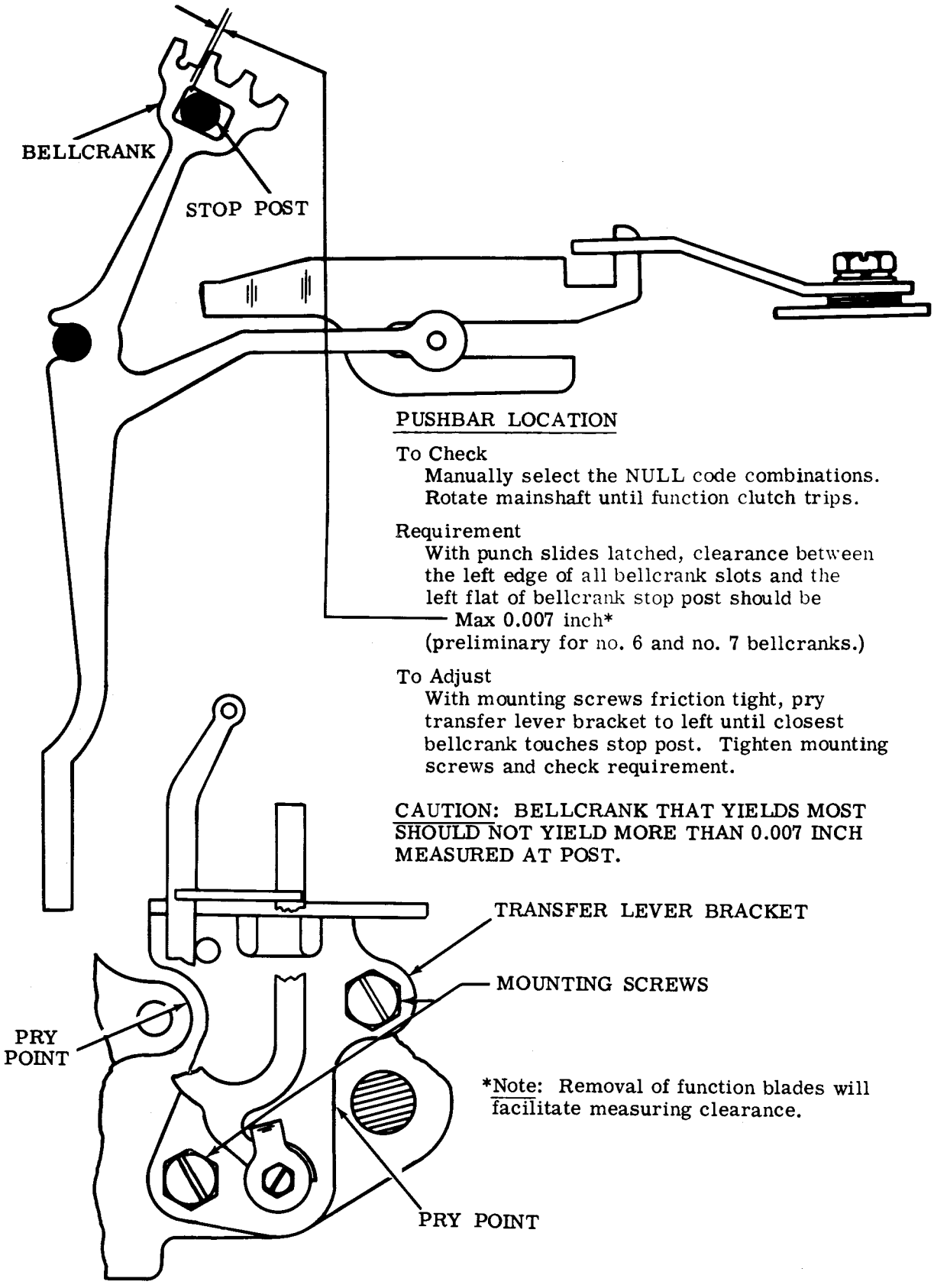

2.39 Ribbon Shift and Print Suppression Mechanism (Early Design)

Note: Refer to variable features (Part 3) for additional adjustments applying to print suppression only.

(For latest design see 2.41)

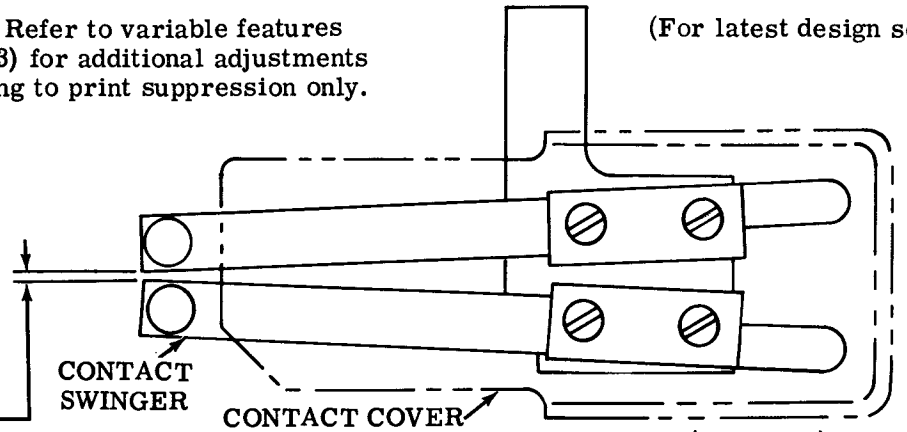

(Top View)

RIBBON SHIFT AND PRINT SUPPRESSION CONTACTS

Note: The contact assembly can be identified by gold-plated contact points with a common transfer contact point on the contact swinger spring.

(1) Requirement

With the two contact swingers positioned toward each other, the clearance between the swingers should be

Min 0.035 inch---Max 0.060 inch

To Adjust

Disconnect all power from unit. Remove the contact assembly from the function box by removing the two mounting bracket screws. With the four contact cover mounting screws friction tight, position the contact swingers. Check the alignment of the associated contacts with each swinger and tighten the four contact cover mounting screws.

(2) Requirement — Preliminary

With the contact assembly still removed from the function box, there should be

Min 0.015 inch---Max 0.020 inch

clearance between the two swinger contact points and their associated normally open contact points. The top surface of the plastic insulators on both swingers should be parallel to each other and in the same plane (as gauged by eye).

(3) Requirement

In addition to the clearance requirement, it should take

Min 2 oz---Max 3 oz

to start each swinger moving and to start normally open contacts moving away from their associated stiffeners.

To Adjust

Adjust the contacts with a contact adjusting tool.

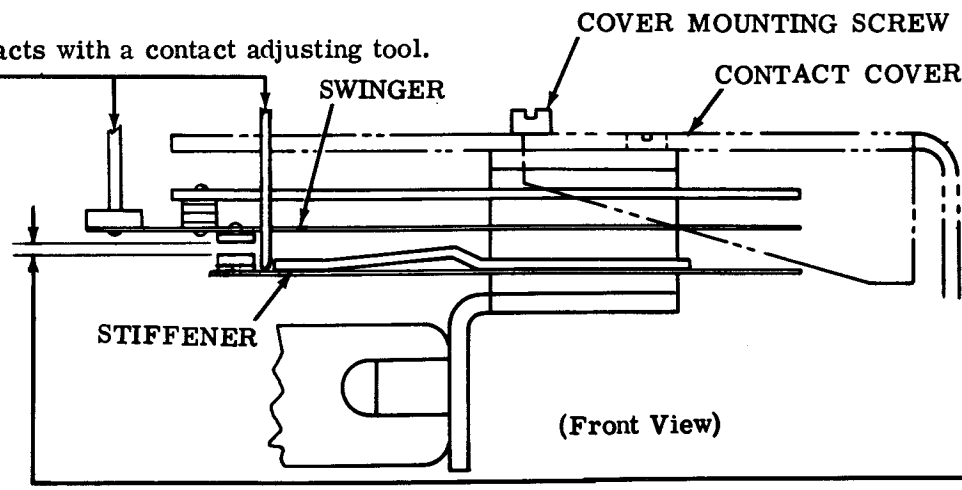

(Front View)

2.40 Ribbon Shift and Print Suppression Mechanism (Early Design) (continued)

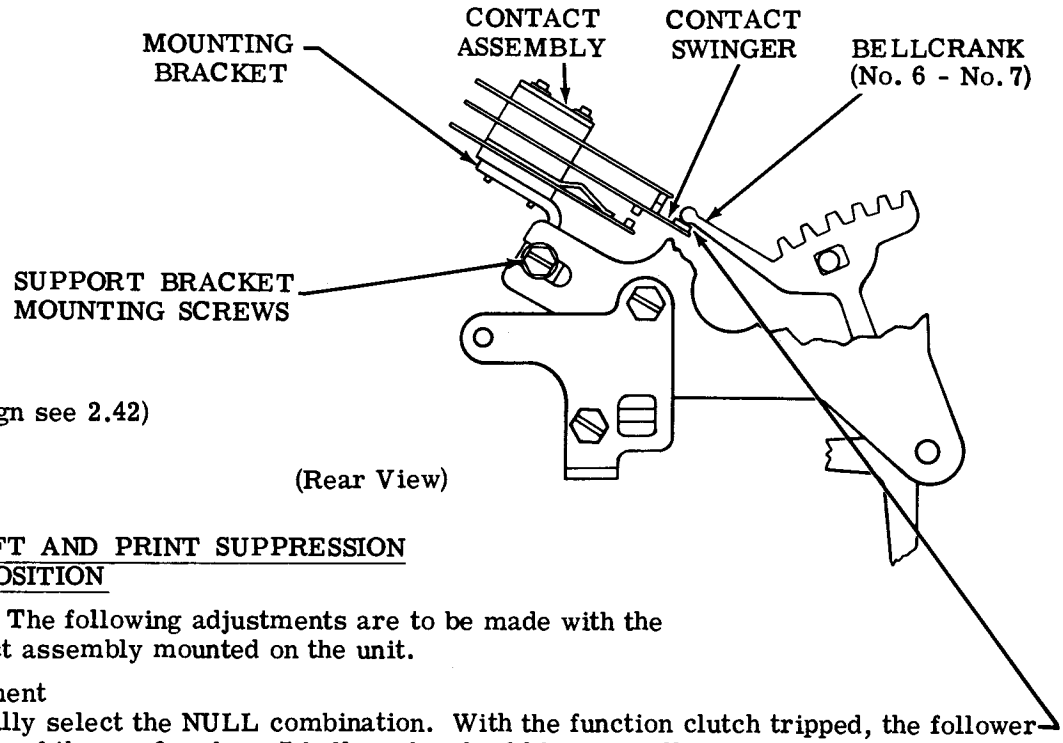

(For Latest Design see 2.42)

RIBBON SHIFT AND PRINT SUPPRESSION CONTACT POSITION

Note: The following adjustments are to be made with the contact assembly mounted on the unit.

(1) Requirement

Manually select the NULL combination. With the function clutch tripped, the follower portion of the no. 6 and no. 7 bellcranks should be centrally positioned with respect to the insulator followers on the contact swingers as viewed from the front of the unit.

To Adjust

With the contact mounting bracket support mounting screws friction tight, position the contact assembly. Tighten screws.

(2) Requirement

With the NULL combination still selected and the function clutch tripped

Min some---Max 0.004 inch

clearance between each of the two spacing contacts and their stiffeners. Take up the play in the function box in a clockwise direction (as viewed from the selector side of the unit).

To Adjust

With the contact bracket mounting screws friction tight, position the bracket. Tighten screws.

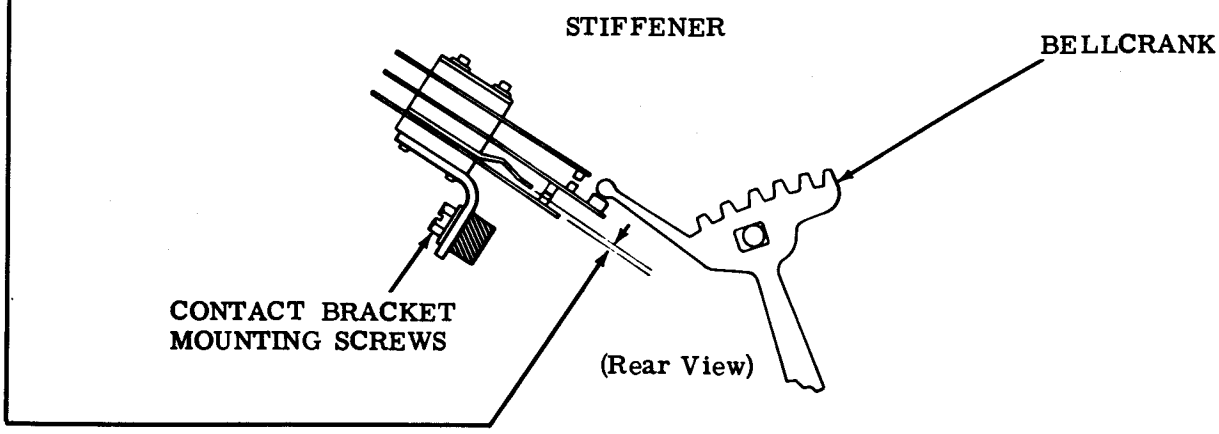

2.41 Ribbon Shift and Print Suppression Mechanism (Latest Design)

Note: Refer to variable features (Part 3) for additional adjustments applying to print suppression only.

(For Early Design see 2.39)

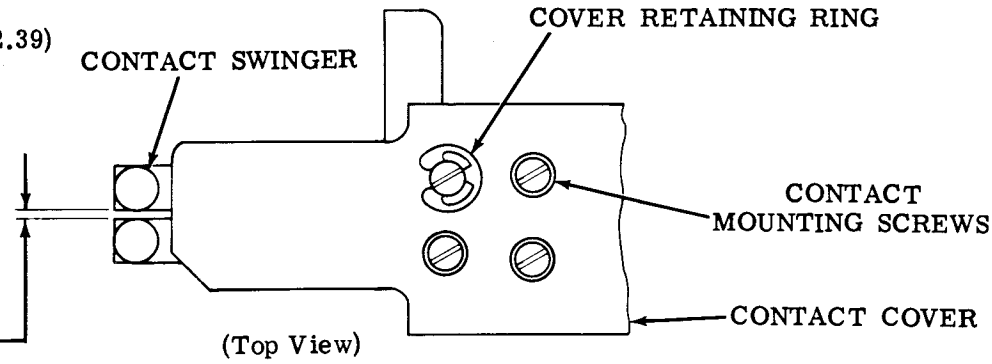

RIBBON SHIFT AND PRINT SUPPRESSION CONTACTS

Note: The contact assembly can be identified by silver contact points with a common transfer contact point on the contact swinger spring and one retaining ring for fastening the cover. The cover may be removed by taking off the cover retaining ring snapped in place over the special cover mounting screw.

(1) Requirement

With the two contact swingers positioned toward each other, the clearance between the swingers should be

Min 0.035 inch---Max 0.060 inch

To Adjust

Disconnect all power from unit. Remove the contact assembly from the function box by removing the two mounting bracket screws. With the four contact mounting screws friction tight, position the contact swingers. Check the alignment of the associated contacts with each swinger and tighten the four screws.

(2) Requirement — Preliminary

With the contact assembly still removed from the function box, there should be

Min 0.015 inch---Max 0.020 inch

clearance between the two swinger contact points and their associated normally open contact points. The top surface of the plastic insulators on both swingers should be parallel to each other and in the same plane (as gauged by eye).

(3) Requirement

In addition to the clearance requirement, it should take

Min 45 grams---Max 60 grams

to start each swinger moving and to start normally open contacts moving away from their associated stiffeners.

To Adjust

Adjust the contacts with a contact adjusting tool.

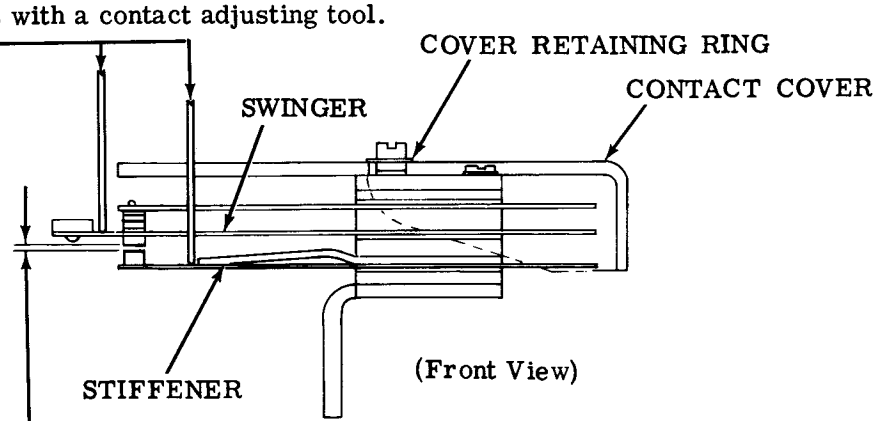

2.42 Ribbon Shift and Print Suppression Mechanism (Latest Design) (continued)

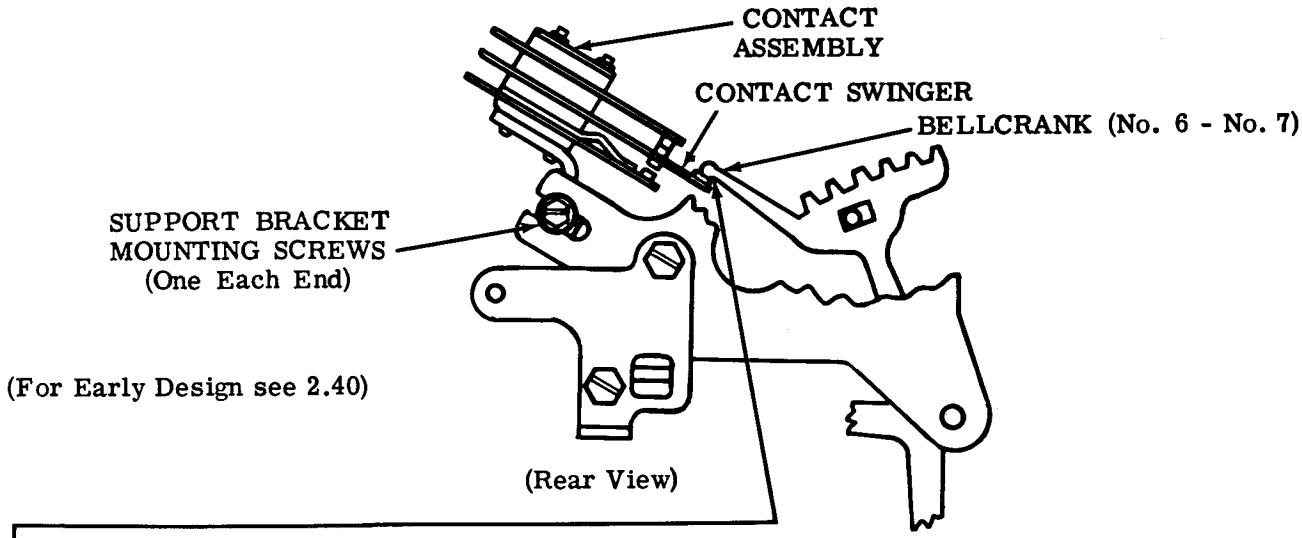

RIBBON SHIFT AND PRINT SUPPRESSION CONTACT POSITION

Note: The following adjustments are to be made with the contact assembly mounted on the unit.

(1) Requirement

Manually select the NULL combination. With the function clutch tripped, the follower portion of the no. 6 and no. 7 bellcranks should be centrally positioned with respect to the insulator followers on the contact swingers as viewed from the front of the unit.

To Adjust

With the contact mounting bracket support mounting screws friction tight, position the contact assembly. Tighten screws.

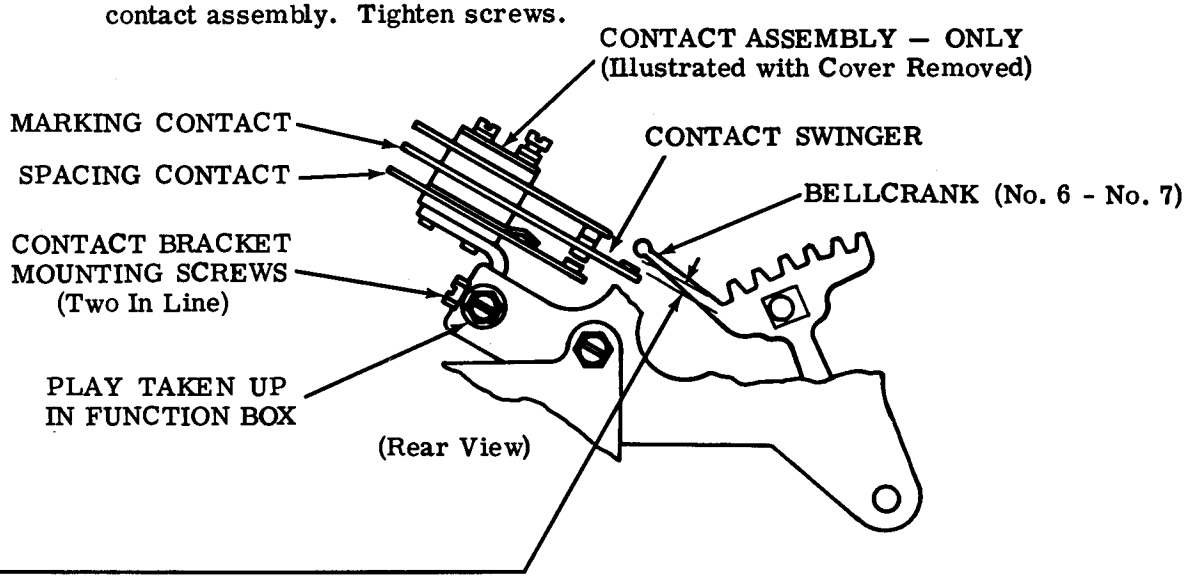

(2) Requirement

With the RUBOUT combination selected and the function clutch tripped, there should be Min 0.025 inch---Max 0.045 inch clearance between the bellcranks and the insulated portion of their respective swingers. Take up the play in the function box.

To Adjust

With the contact bracket mounting screws friction tight, position the bracket. Tighten screws. Replace the cover and secure it with the cover retaining ring.

2.43 Typing Mechanism (continued)

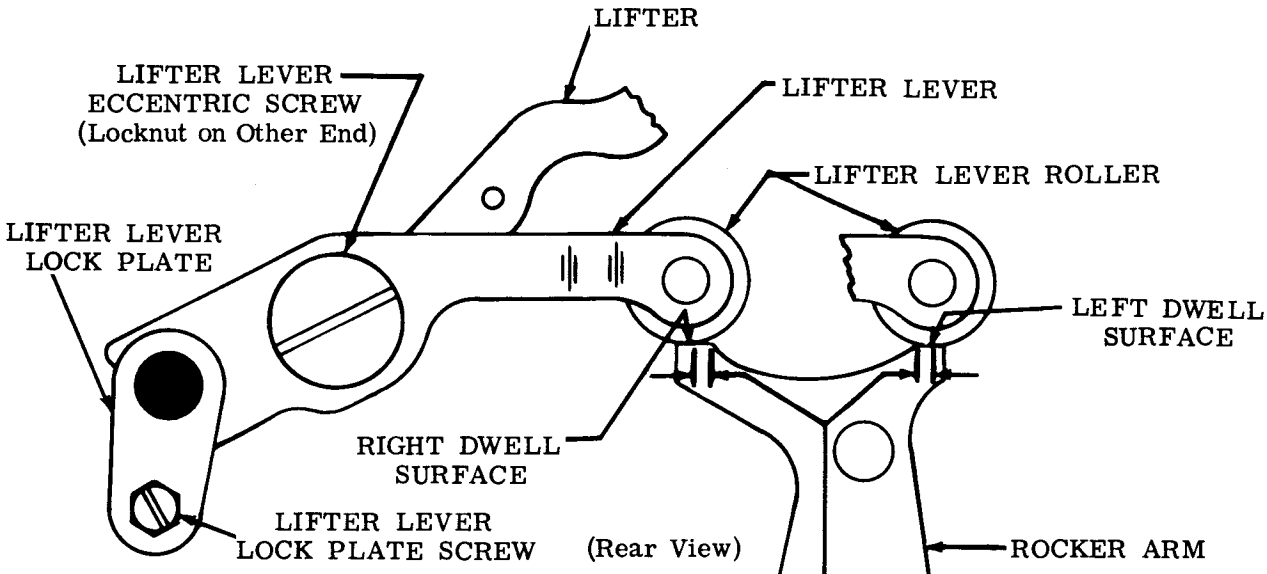

(A) CAM FOLLOWER ROLLER ARM POSITION

To Check
Trip function clutch. Move rocker arm to extreme left position and observe travel of lifter roller on right dwell surface. Move rocker bail to extreme right position and observe travel of roller on left dwell surface.

Requirement
Approximately equal travel on each dwell surface.

To Adjust
Loosen lifter lever lock plate screw until friction tight. With eccentric screw locknut friction tight, position lifter lever. Tighten lifter lever lock plate screw. Do not tighten locknut.

(B) LIFTER OPERATING RANGE

Requirement
With function clutch disengaged, clearance between closest projection of bellcranks and associated function blade projection
Min 0.008 inch---Max 0.020 inch

To Adjust
Position lifter lever eccentric screw with locknut loosened. Tighten nut.

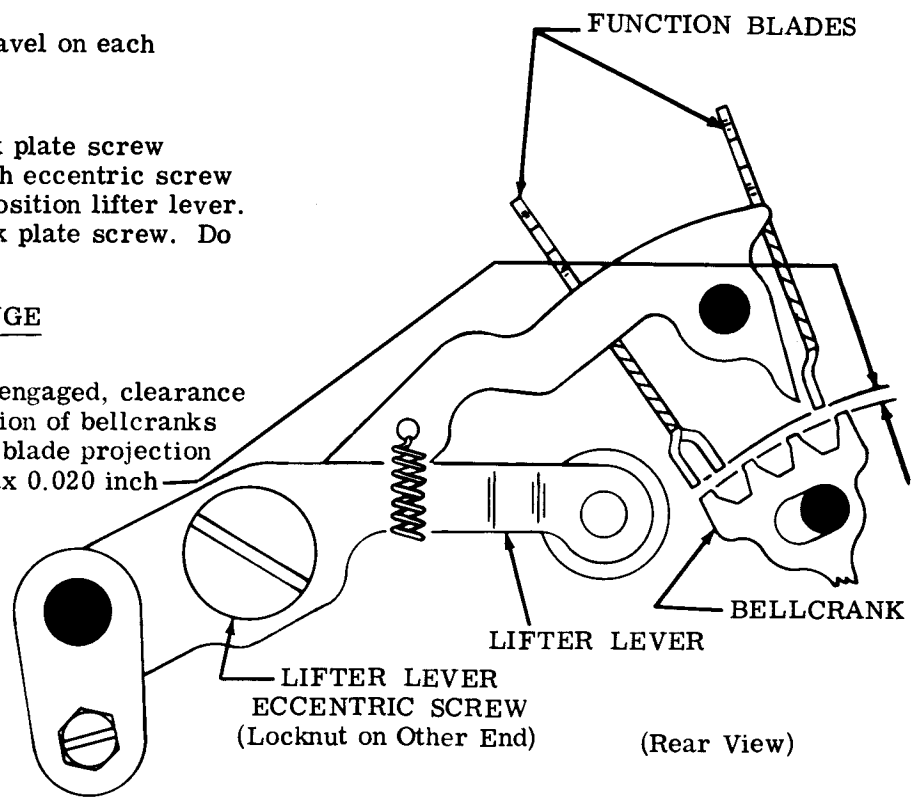

2.44 Typing Mechanism (continued)

Note: Preliminary when no function blades are used.

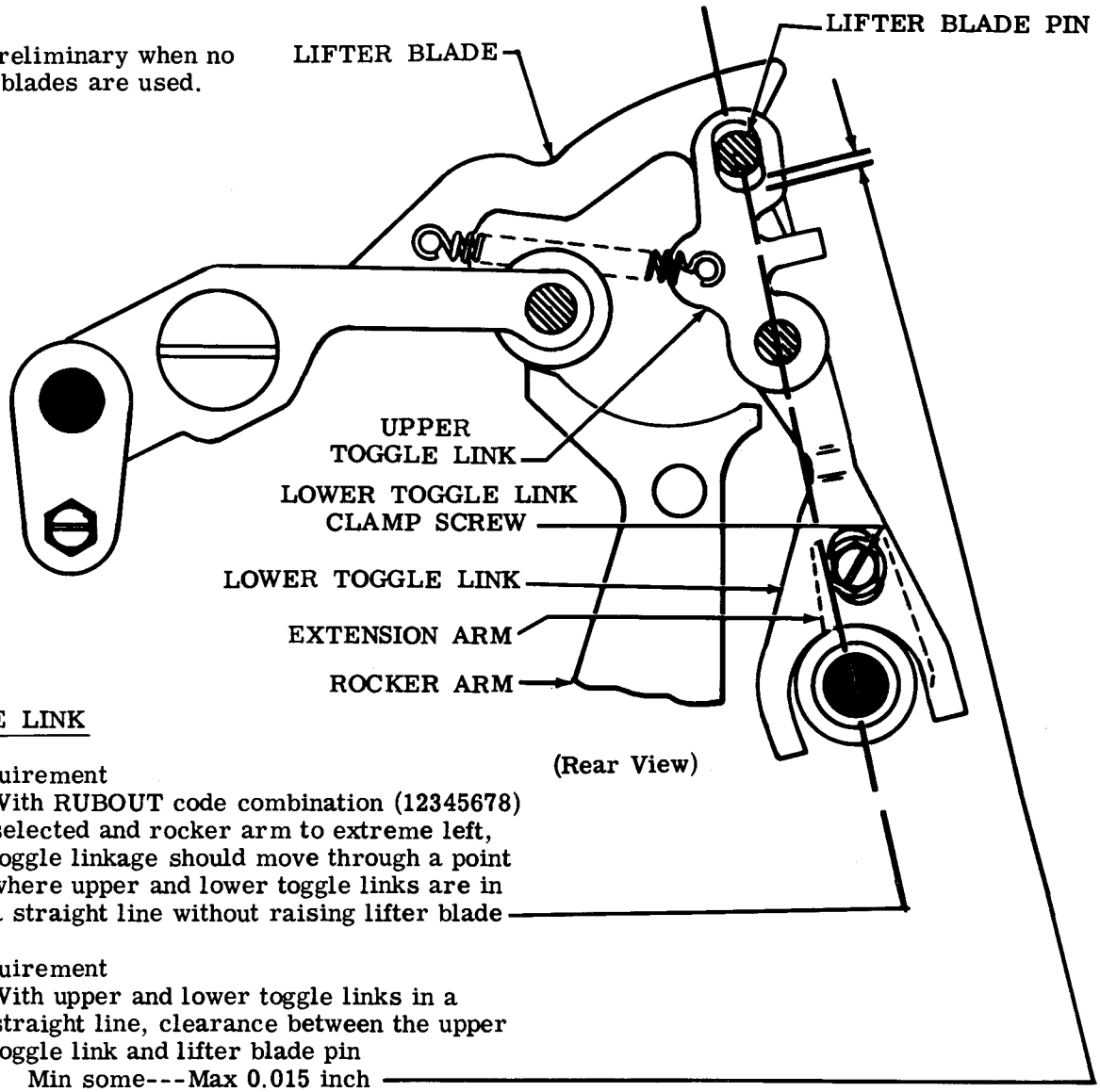

TOGGLE LINK

(1) Requirement
With RUBOUT code combination (12345678) selected and rocker arm to extreme left, toggle linkage should move through a point where upper and lower toggle links are in a straight line without raising lifter blade

(2) Requirement
With upper and lower toggle links in a straight line, clearance between the upper toggle link and lifter blade pin
Min some---Max 0.015 inch

To Adjust
Position lower toggle link by moving its extension arm up or down with clamp screw friction tight. Tighten screw.

Note: To avoid interference with the lower toggle link clamp screw and the axial corrector link, it may be necessary to move the high part of the corrector bushing above its horizontal center line.

2.45 Typing Mechanism (continued)

Note: Preliminary when no function blades are used.

TOGGLE TRIP ARM

Requirement
As rocker arm approaches extreme right position, the lifter toggle should break and lifter arm roller should drop onto right dwell surface.

To Adjust
By means of pry points, position toggle trip post with clamp screw loosened. Tighten screw.

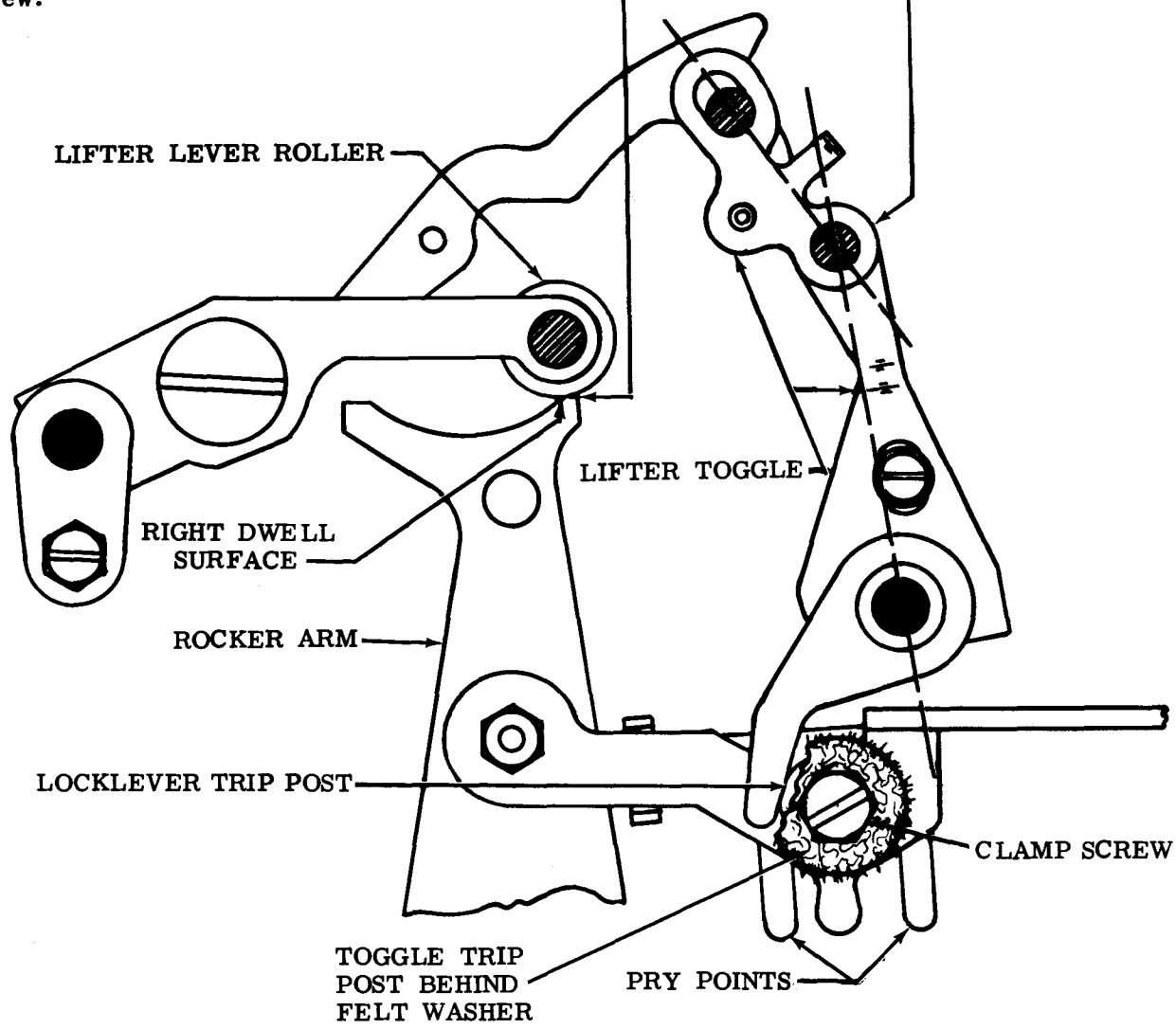

2.46 Typing Mechanism (continued)

(A) LIFTER TOGGLE LINK SPRING

Requirement
With unit in stop position
Min 1-1/2 oz---Max 2-1/4 oz
to pull spring to installed length.

(B) FUNCTION BLADE SPRING (2 Or More)

Requirement (If so equipped)
With unit in stop position
Min 7 oz---Max 10 oz
to start function blade moving.

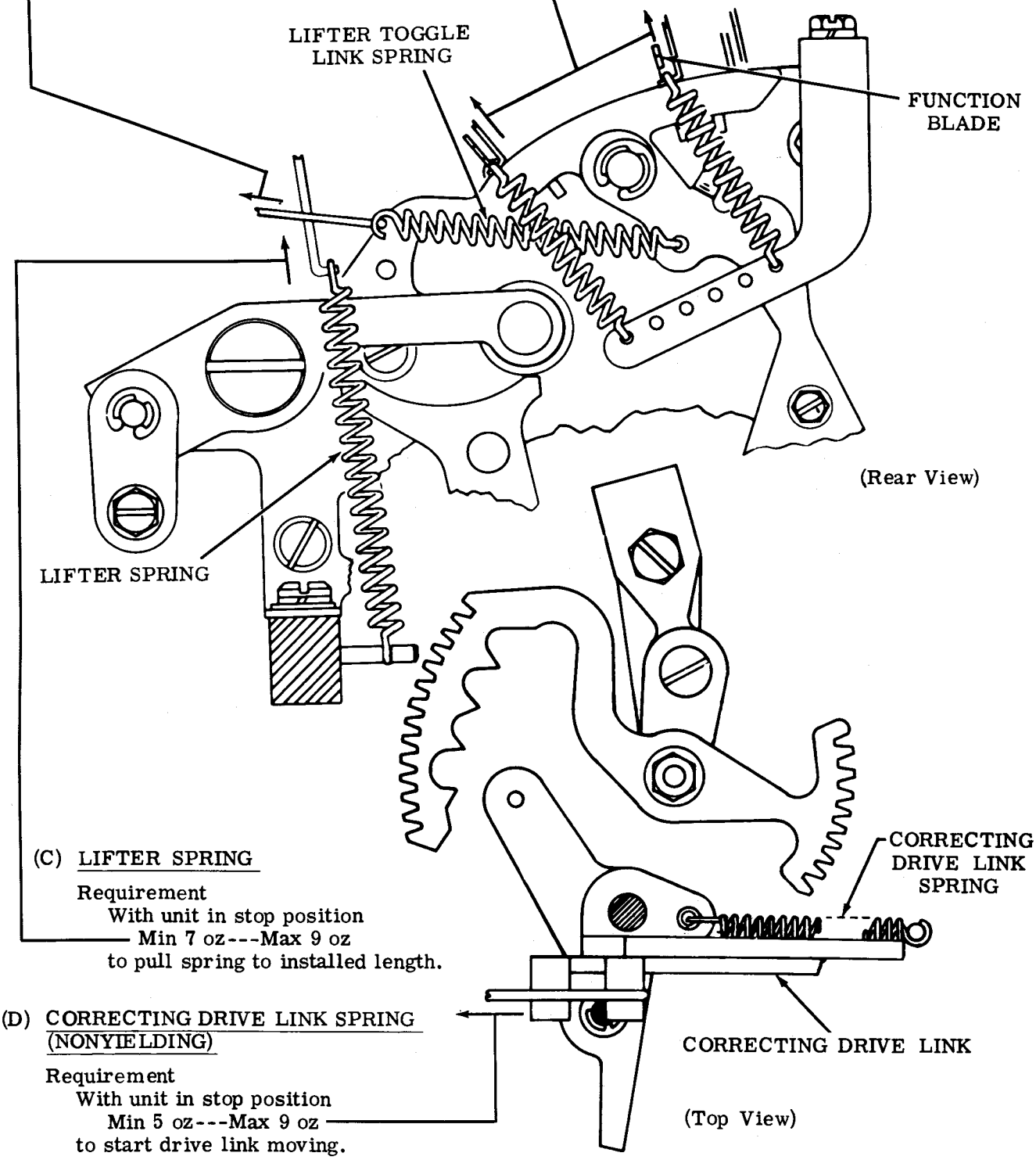

(C) LIFTER SPRING

Requirement
With unit in stop position
Min 7 oz---Max 9 oz
to pull spring to installed length.

(D) CORRECTING DRIVE LINK SPRING (NONYIELDING)

Requirement
With unit in stop position
Min 5 oz---Max 9 oz
to start drive link moving.

2.47 Typing Mechanism (continued)

(A) OSCILLATING BAIL DRIVE LINK

To Check

Position rocker bail to its extreme left.

Requirement

Sector mounting stud, toggle pivot screw and oscillating bail mounting screw should approximately line up.

To Adjust

With locknut friction tight, position oscillating link by means of its eccentric bushing. Tighten nut.

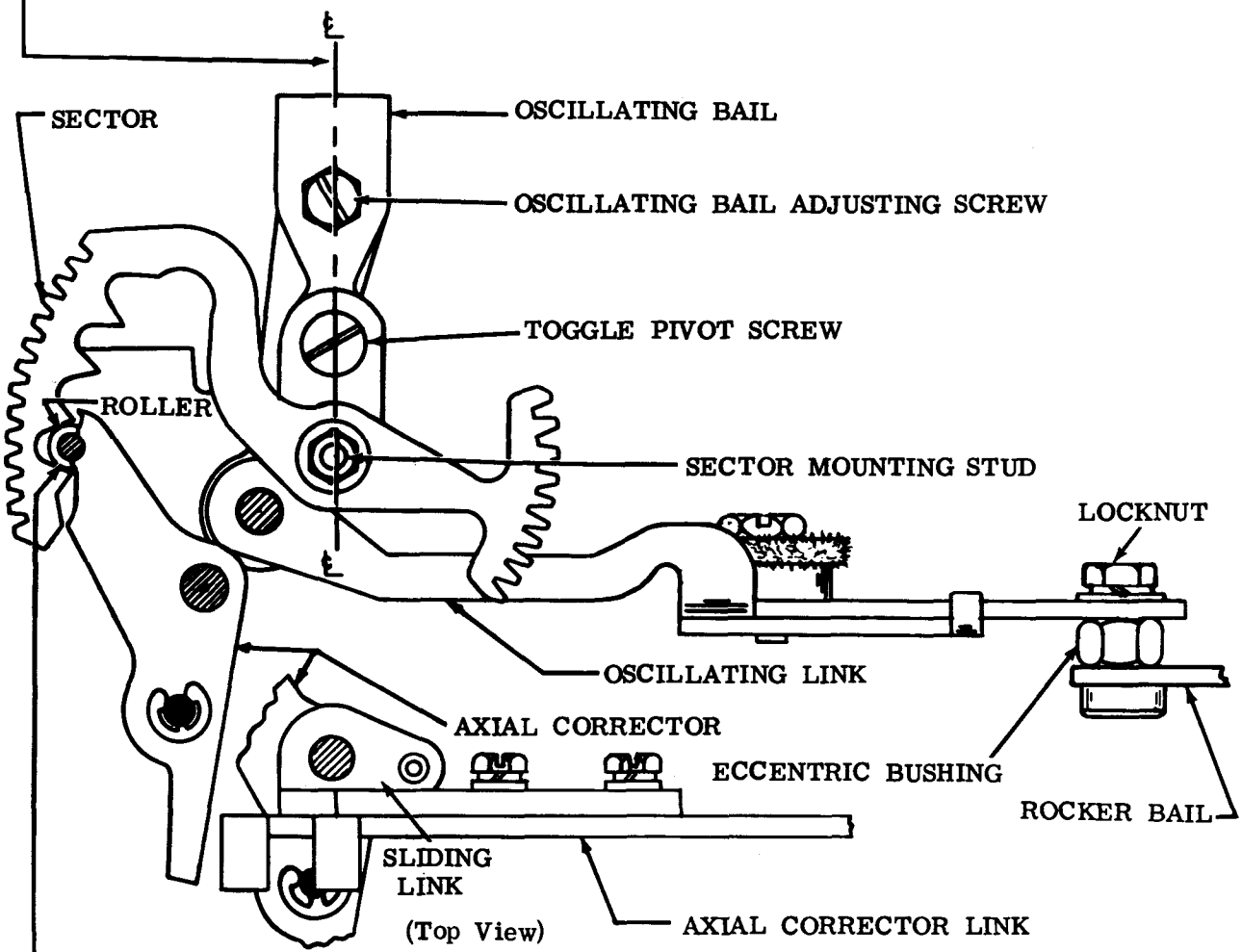

(B) OSCILLATING BAIL PIVOT

Requirement

With NULL combination selected, rotate mainshaft taking up the axial play in type wheel shaft toward the front of the unit. The axial corrector roller should enter first notch of the sector centrally.

To Adjust

With oscillating bail adjusting screw friction tight, select NULL combination. Position oscillating bail by means of its elongated mounting hole so corrector roller enters first notch of the sector when rocker bail moves to its extreme left position. Hold corrector roller firmly in first notch and take up the play in oscillating bail linkage by applying a force to the oscillating bail. Tighten oscillating adjusting screw.

2.48 Typing Mechanism (continued)

CORRECTOR DRIVE LINK (YIELDING) EXTENSION SPRING

Requirement

With the NULL code combination selected, function clutch tripped, and rocker bail in its extreme left position, place a 32 oz spring scale hook on the end of the corrector axial plate. It should take

Min 16 oz---Max 32 oz

to move roller from notch in the sector.

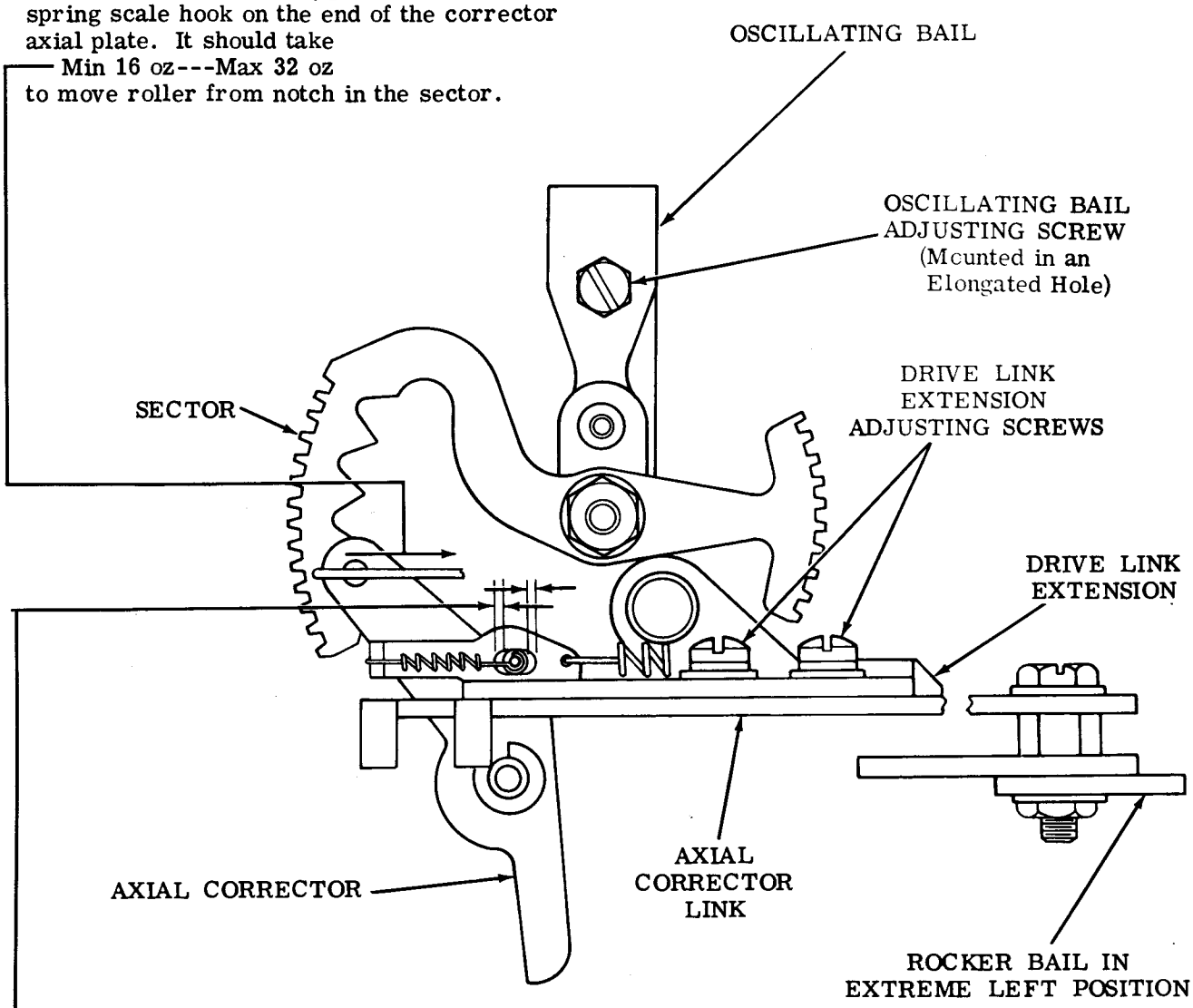

AXIAL CORRECTOR (YIELDING)

Requirement

With all NULL code combination selected, function clutch tripped and rocker bail in its extreme left position, the axial corrector roller should seat in the first sector notch and there should be

Min 0.005 inch

between the ends of the slot and the spring post. Check both sides and check seating in fourth notch (letters selection). Turn the retaining ring that fastens drive link extension to corrector plate to check the minimum requirement.

To Adjust

Loosen two drive link adjusting screws. Position drive link to meet the requirement and retighten the screws.

2.49 Typing Mechanism (continued)

(A) AXIAL SECTOR ALIGNMENT

(1) Requirement
Teeth of axial sector and axial output rack should engage by their full thickness.

(2) Requirement
Guide roller free to rotate.

To Adjust
Loosen locknut. Disengage rack. Remove retaining ring and guide roller. Add or remove shims. Place extra shims on top of shim used to retain felt washer. Tighten nut.

Note: On units equipped with larger (0.594 inch diameter) roller, no adjustment is required.

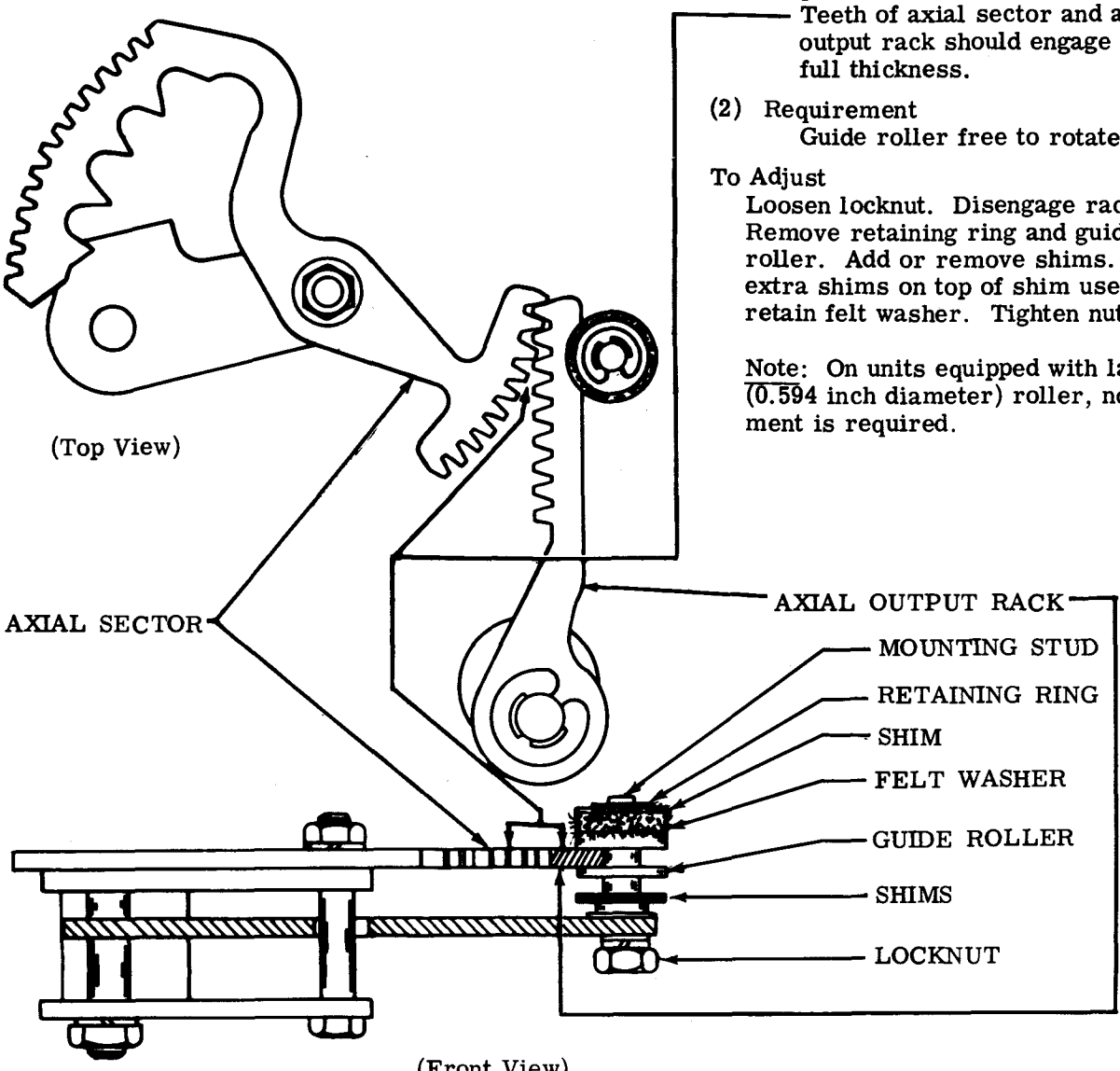

(B) ECCENTRIC SHAFT
DETENT LEVER SPRING — (6)

Requirement
Min 7 oz---Max 10 oz
to start detent lever moving.

Note: Check all 6 springs. There are two on the axial positioning mechanism and four on the rotary positioning mechanism.

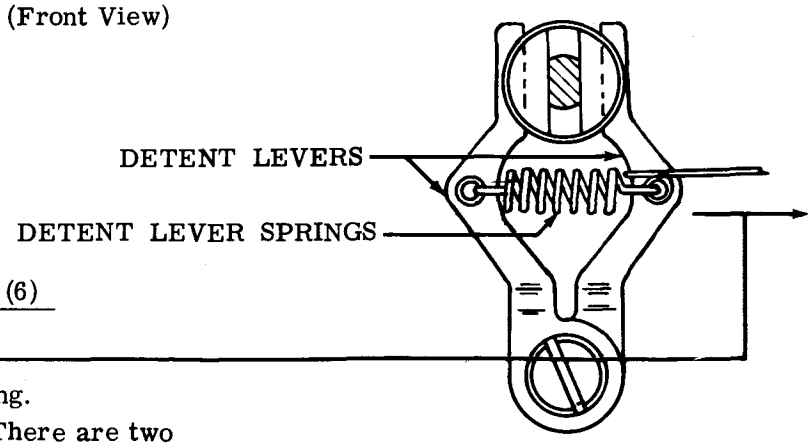

(Top View of Springs on Axial Positioning Mechanism)

2.50 Typing Mechanism (continued)

(A) AXIAL OUTPUT RACK GUIDE ROLLER

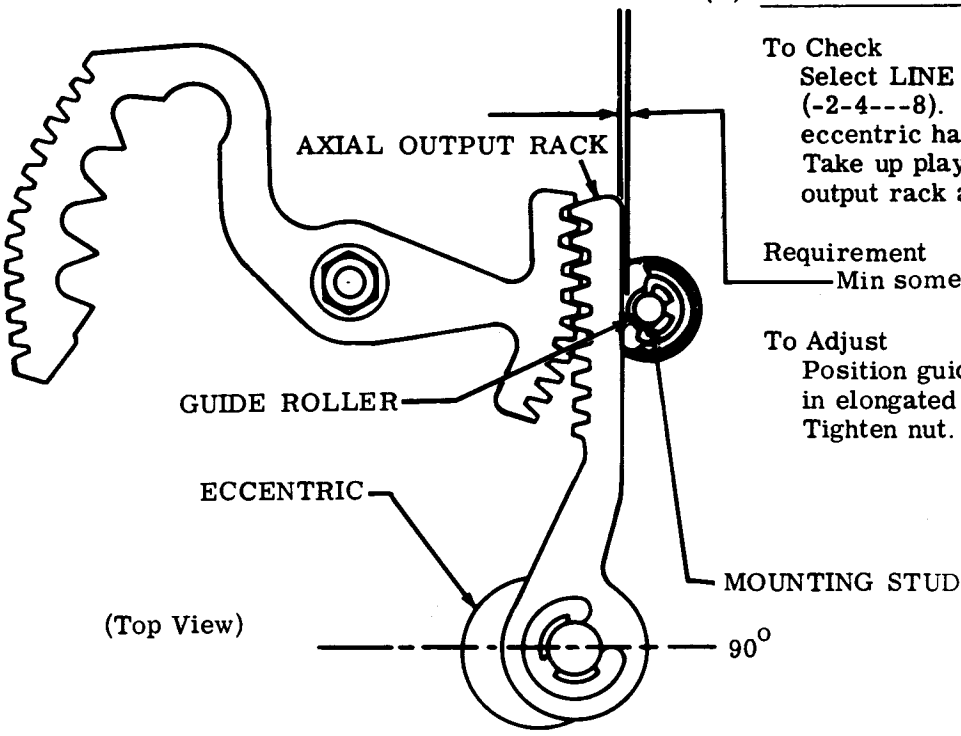

To Check
Select LINE FEED code combination (-2-4---8). Rotate mainshaft until eccentric has rotated 90 degrees. Take up play to make clearance between output rack and guide roller maximum.

Requirement
Min some---Max 0.008 inch

To Adjust
Position guide roller mounting stud in elongated hole with locknut loosened. Tighten nut.

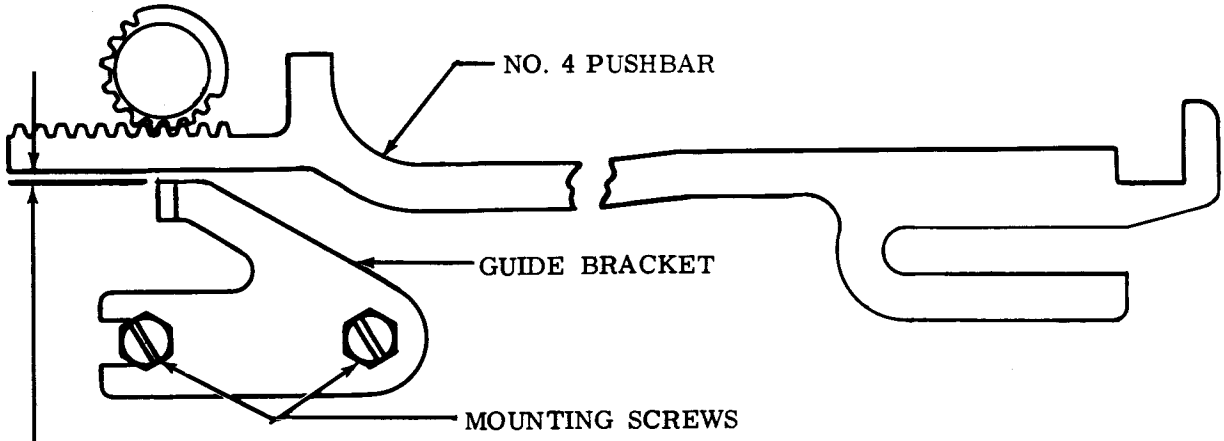

(B) PUSHBAR GUIDE BRACKET

To Check
Manually select CARRIAGE RETURN code combination (1-34---8). Rotate mainshaft so that no. 4 pushbar moves through complete range of travel.

Requirement
When play is taken up to make clearance maximum
Min some---Max 0.008 inch
between no. 4 pushbar and guide bracket throughout complete travel of bar.

To Adjust
Position guide bracket with mounting screws loosened. Tighten screws.

2.51 Typing Mechanism (continued)

(A) CORRECTING DRIVE LINK (NONYIELDING)

(1) To Check
Select the NULL code combination. Trip function clutch and move rocker bail to extreme left.

Requirement
Roller on axial correcting plate firmly seated in first notch of axial sector.

(2) To Check
Select RUBOUT code combination (12345678). Trip function clutch and move rocker bail to extreme left.

Requirement
Roller on axial correcting plate firmly seated in fourth notch of axial sector.

To Adjust
Loosen drive link adjusting screws. Holding roller firmly seated in first notch and holding drive link down (bottomed) against bushing, tighten adjusting screws.

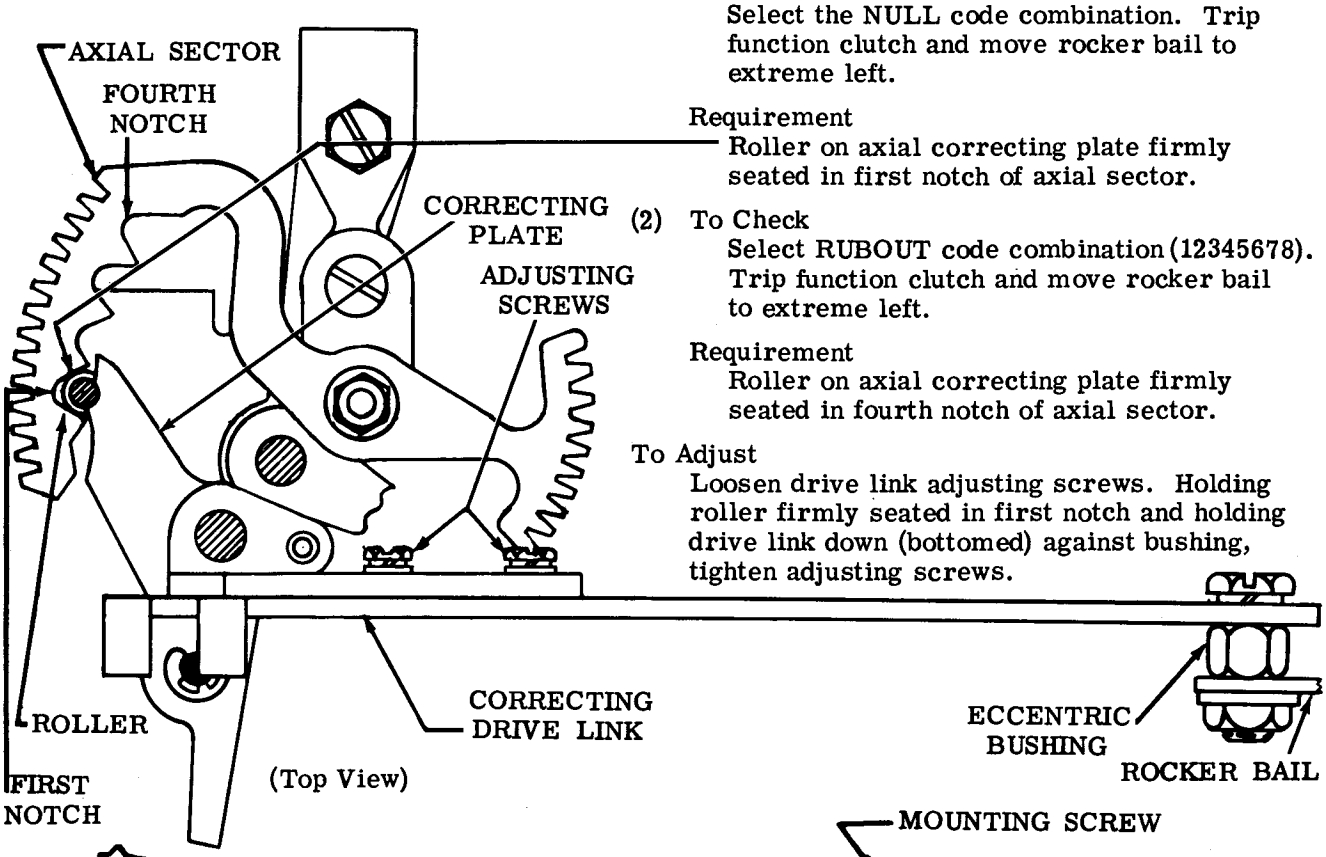

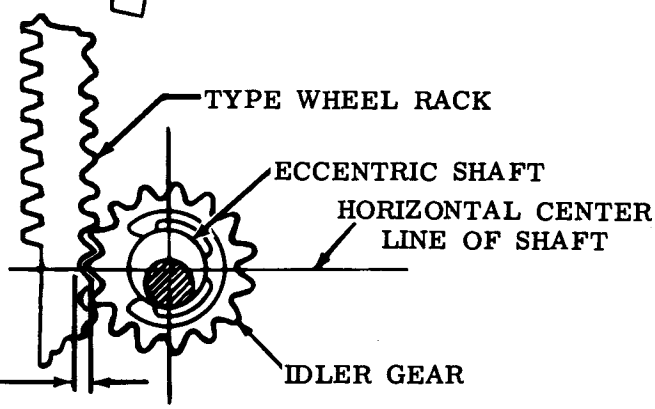

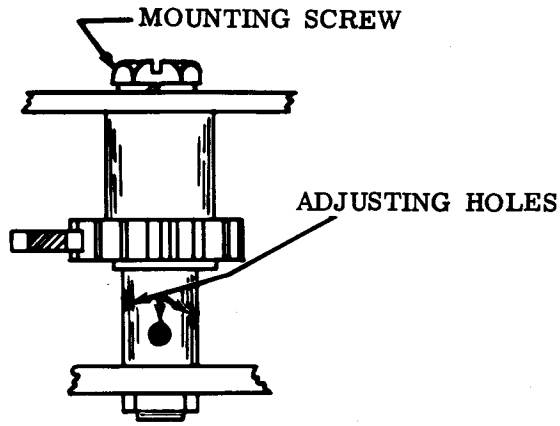

(Top View)

(B) TYPE WHEEL RACK CLEARANCE

Requirement
With function clutch disengaged and upper no. 7 pushbar to the right
Min some---Max 0.015 inch
clearance between idler gear and rack at the closest point when all play is taken up in a direction to make clearance a maximum. There should be some clearance throughout travel of the rack.

To Adjust
With mounting screw friction tight, position idler gear eccentric shaft by means of three adjusting holes in top of shaft. Tighten screw.

2.52 Typing Mechanism (continued)

ROTARY CORRECTOR MESH

(1) Requirement
With X code combination selected and the pushbars manually detented, the second tooth from the top of the rotary output rack should seat between the lobes of the rotary corrector arm.

To Adjust
Loosen clamp arm screw and eccentric bushing locknut. With the pivot of the corrector arm to the right of the center of the bushing, position rotary corrector. Tighten bushing locknut. Do not tighten clamp arm screw at this point.

(2) Requirement
In a manner similar to that described above, check engagement of fifth tooth (--34--7), ninth tooth (---4---), and sixteenth tooth (--3-5--). Refine the adjustment if necessary.

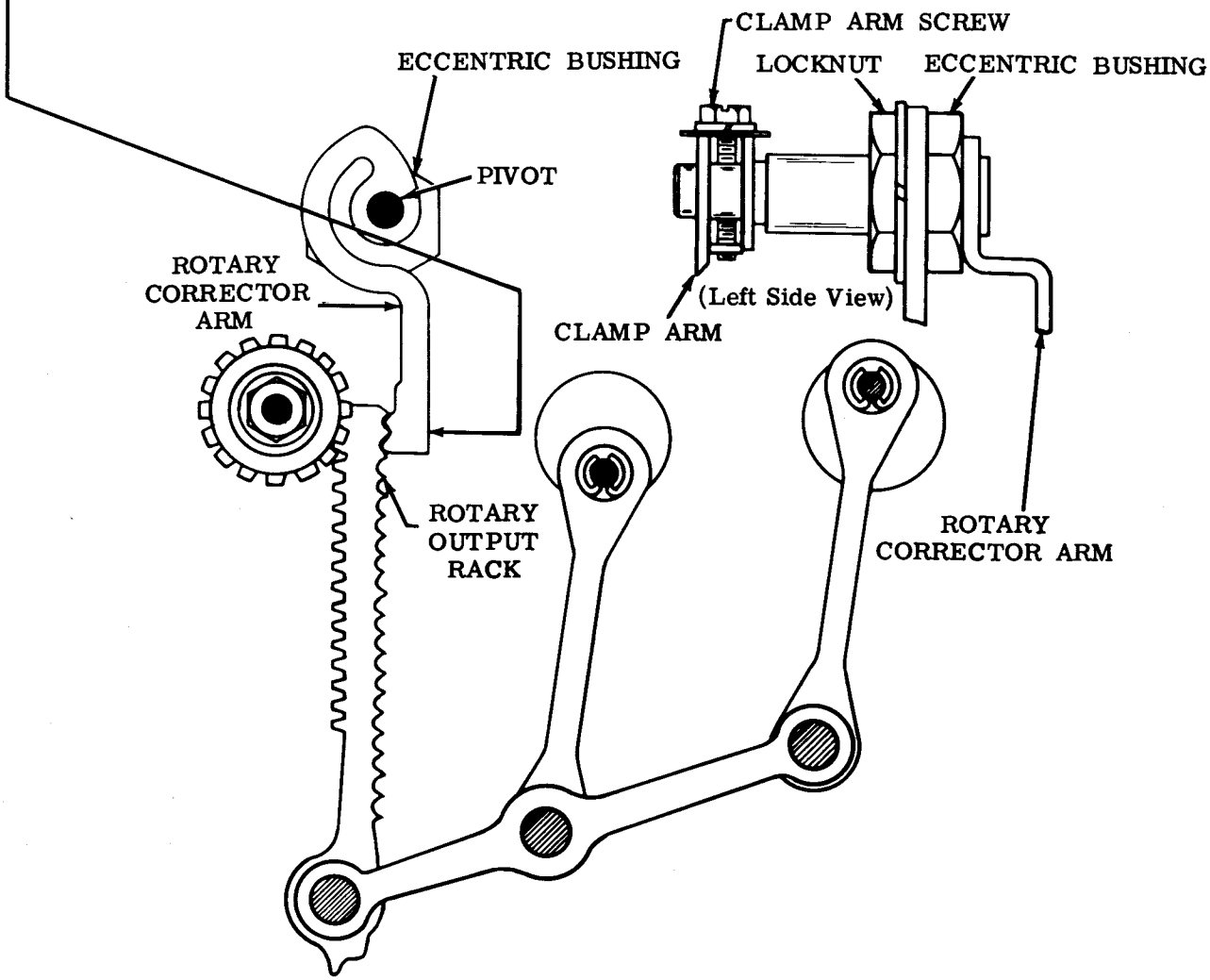

2.53 Typing Mechanism (continued)

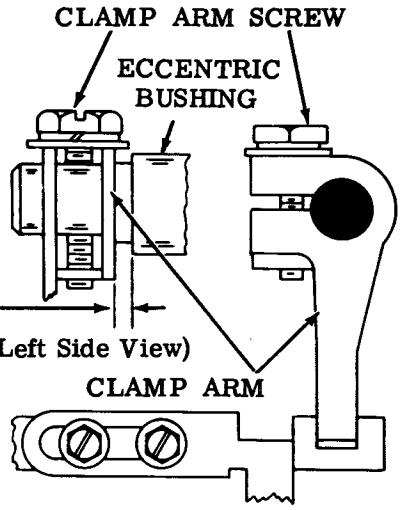

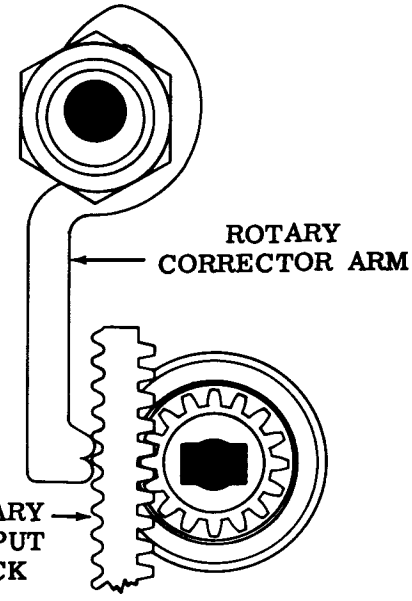

ROTARY CORRECTOR ARM

To Check
With unit in letters condition, select the RUBOUT code combination (12345678). Position rocker bail to extreme left. Manually seat corrector arm in rack.

Requirement
The rotary corrector arm should seat firmly in the rotary output rack.

Min some---Max 0.006 inch
endplay between clamp arm and bushing, with unit in the stop position.

To Adjust (Units equipped with a yielding axial corrector)
As the rocker bail approaches the extreme left and the spring post of the axial corrector starts to leave the end of its slot, take up play of drive arm in its operating fork towards main bail and position the rotary corrector arm finger tight against rotary output rack and tighten clamp arm screw.

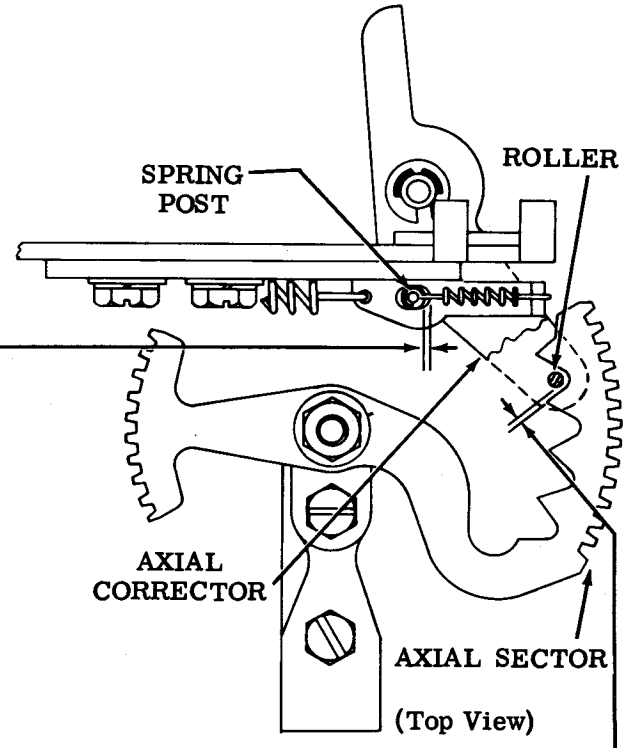

To Adjust (Units equipped with nonyielding axial corrector)
As the rocker bail approaches the extreme left, measure clearance between the axial corrector roller and the sector notch. When clearance is

Min some---Max 0.005 inch
position rotary corrector arm finger tight against rotary output rack, and tighten correcting clamp arm screw.

2.54 Ribbon Shift and Print Suppression Mechanism (Latest Design) (continued)

RIBBON CARRIER SPRING

Requirement
With unit in stop position
Min 7 oz---Max 10 oz
to start carrier moving.

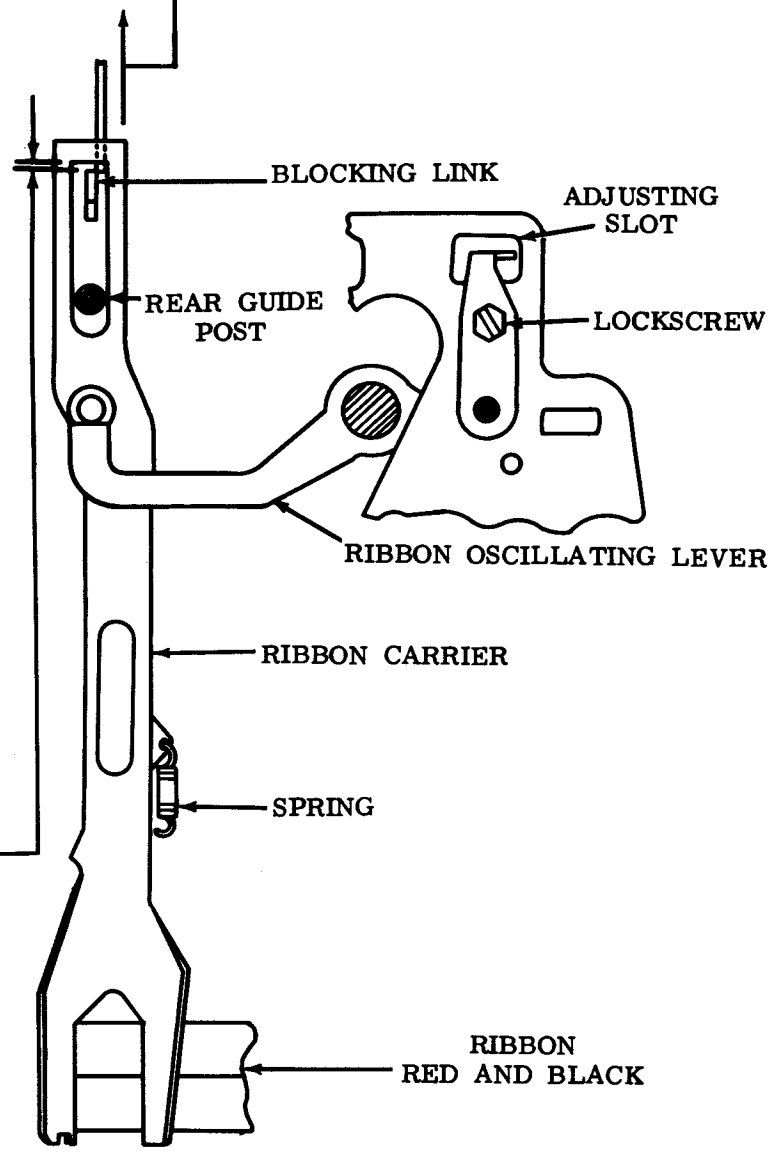

RIBBON CARRIER

Requirement
With function clutch disengaged, manually lift blocking lever so that it is opposite ribbon carrier and against the type wheel shaft housing.
Min 0.040 inch---Max 0.060 inch clearance between blocking link and ribbon carrier.

To Adjust
Loosen lockscrew. Position ribbon oscillating lever, using adjusting slot. Tighten screw.

2.55 Ribbon Shift and Print Suppression Mechanism (Early Design) (continued)

Note: The following adjustments apply to units with graphics either suppressed or in red (red of red-black ribbon towards rear of unit) when magnet is de-energized.

(B) ARMATURE AIR GAP

Requirement
With armature on downstop screw
Min 0.015 inch---Max 0.020 inch clearance between magnet core and armature at closest point and
Min some---Max 1/32 inch clearance between rear of armature slot and blocking link as gauged by eye.

To Adjust
Position magnet bracket with screws loosened. Tighten screws. Check for binds.

(A) ARMATURE DOWNSTOP

Requirement
With rocker bail in extreme left position and ribbon carrier biased downward, hold the blocking link against the type wheel shaft housing.
Min some---Max 0.005 inch clearance between top surface of blocking link and lower surface of ribbon carrier.

To Adjust
Position armature downstop screw with lock nut loosened.

(D) ARMATURE SPRING

Requirement
With spring disconnected
Min 3-1/2 oz---Max 4-1/2 oz when pulled to installed length.

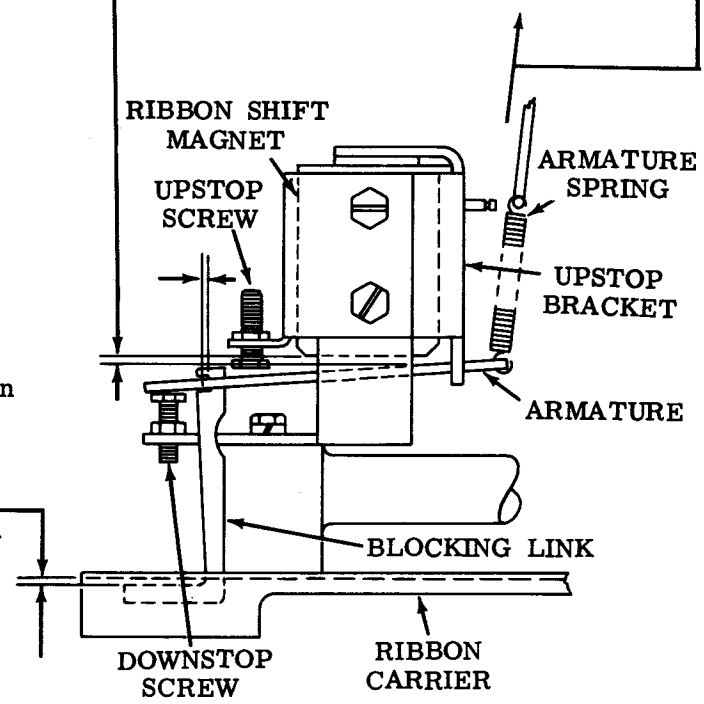

(C) ARMATURE UPSTOP

Requirement
With armature held against upstop screw (magnet is not to be energized)
Min 0.004 inch---Max 0.007 inch clearance between magnet core and armature at closest point.

To Adjust
Position upstop screw with lock-nut loosened. Tighten nut.

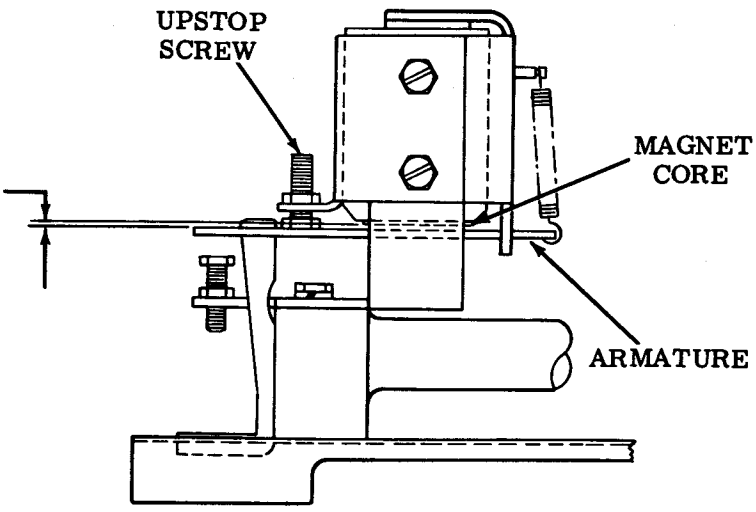

Note: Refer to Part 3 for additional print suppression adjustments.

2.56 Ribbon Shift and Print Suppression Mechanism (Latest Design) (continued)

Note: The following adjustments apply to units with printing of graphics either suppressed or in red (red of red-black ribbon towards front of unit) when magnet is de-energized.

(C) ARMATURE AIR GAP AND DOWNSTOP

Requirement
With armature resting on downstop screw
Min 0.015 inch---Max 0.020 inch
clearance between magnet core and armature at closest point.

To Adjust
Position downstop screw with locknut loosened. Tighten nut.

(D) ARMATURE SPRING

Requirement
With spring disconnected
Min 3-1/2 oz---Max 4-1/2 oz
when pulled to installed length.

(B) BLOCKING LINK

Requirement
With armature held against upstop screw (magnet is not to be energized) and ribbon carrier biased upward
Min some---Max 0.008 inch
clearance between blocking link lower surface and ribbon carrier top surface at closest point and
Min some---Max 0.031 inch
clearance between rear of armature slot and blocking link as gauged by eye.

To Adjust
Position magnet bracket with screws loosened. Tighten screws.

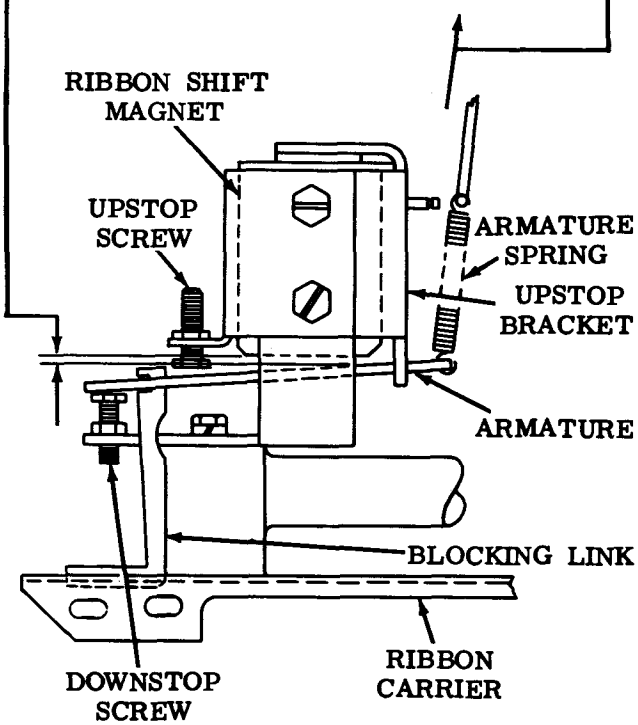

(A) ARMATURE UPSTOP

Requirement
With armature held against upstop screw (magnet is not to be energized) ribbon carrier biased upward
Min 0.005 inch---Max 0.010 inch
clearance between magnet core and armature at closest point.

To Adjust
Position upstop screw with locknut loosened. Tighten nut.

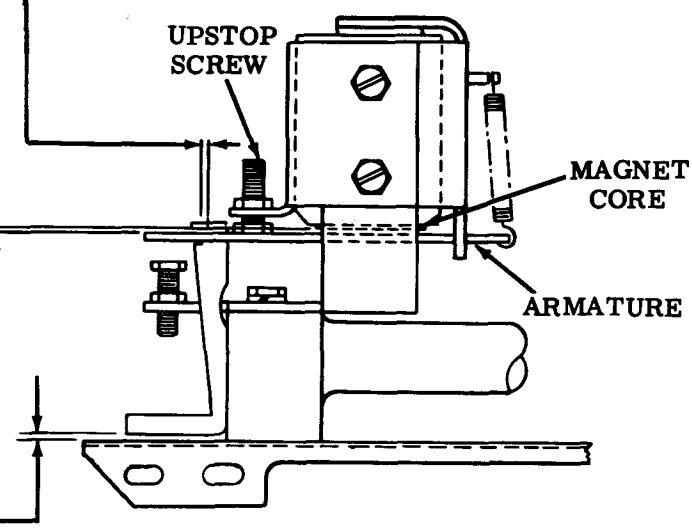

Note: Refer to Part 3 for additional print suppression adjustments.

2.57 Typing Mechanism (continued)

PRINTING LATCH

Note 1: For units with adjustable printing latch mounting bracket.

(1) Requirement
With rocker bail in its extreme left position, manually raise the print hammer accelerator. The clearance between the print hammer accelerator and the printing latch should be
Min some---Max 0.015 inch

(2) Requirement
With rocker bail in its extreme right position, there should be some overtravel of the print hammer accelerator with respect to the latching surface of the printing latch and some clearance between the print hammer accelerator and the ribbon carrier (or accelerator blocking link if present).

To Adjust

(1) Position the rocker bail to the extreme right. With the high part of the eccentric to the left, rotate the eccentric so that the clearance between the print hammer accelerator and the ribbon carrier is
Approximately 0.065 inch
With mounting screws friction tight, position the printing latch mounting bracket to its extreme rear position.

(2) With the rocker bail to the extreme left, move the printing latch mounting bracket toward the front until the print hammer accelerator just trips. Tighten the mounting screws.

(3) With the rocker bail to the extreme left, position the trip lever eccentric (keeping the high part to the left) until the clearance between the printing latch and the print hammer accelerator is as called for in requirement (1). Tighten nut.

Note 2: For units with non-adjustable printing latch mounting bracket use above "(1) Requirement" and adjust according to "To Adjust (3)."

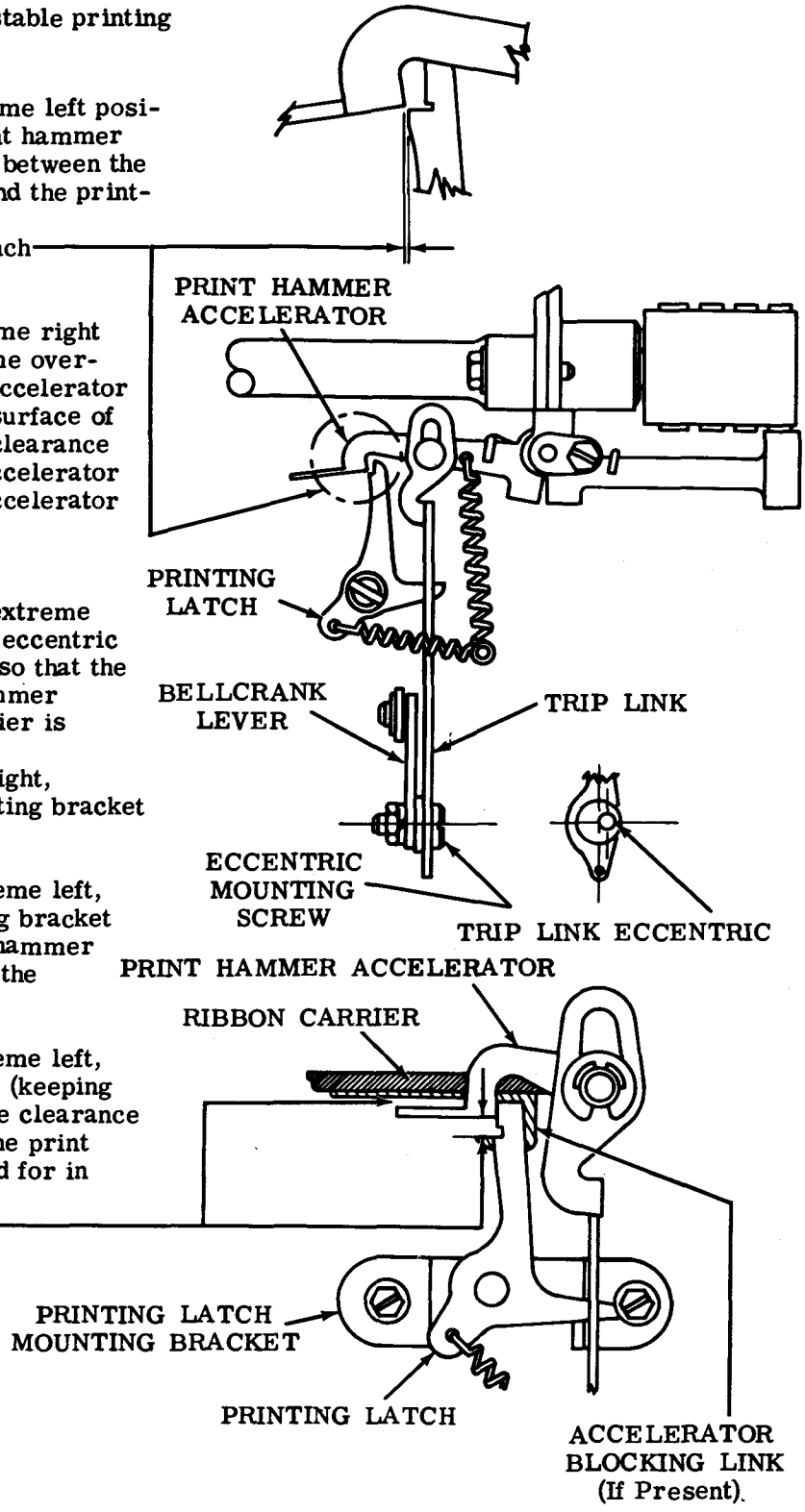

(Left Side Views)

2.58 Typing Mechanism (continued)

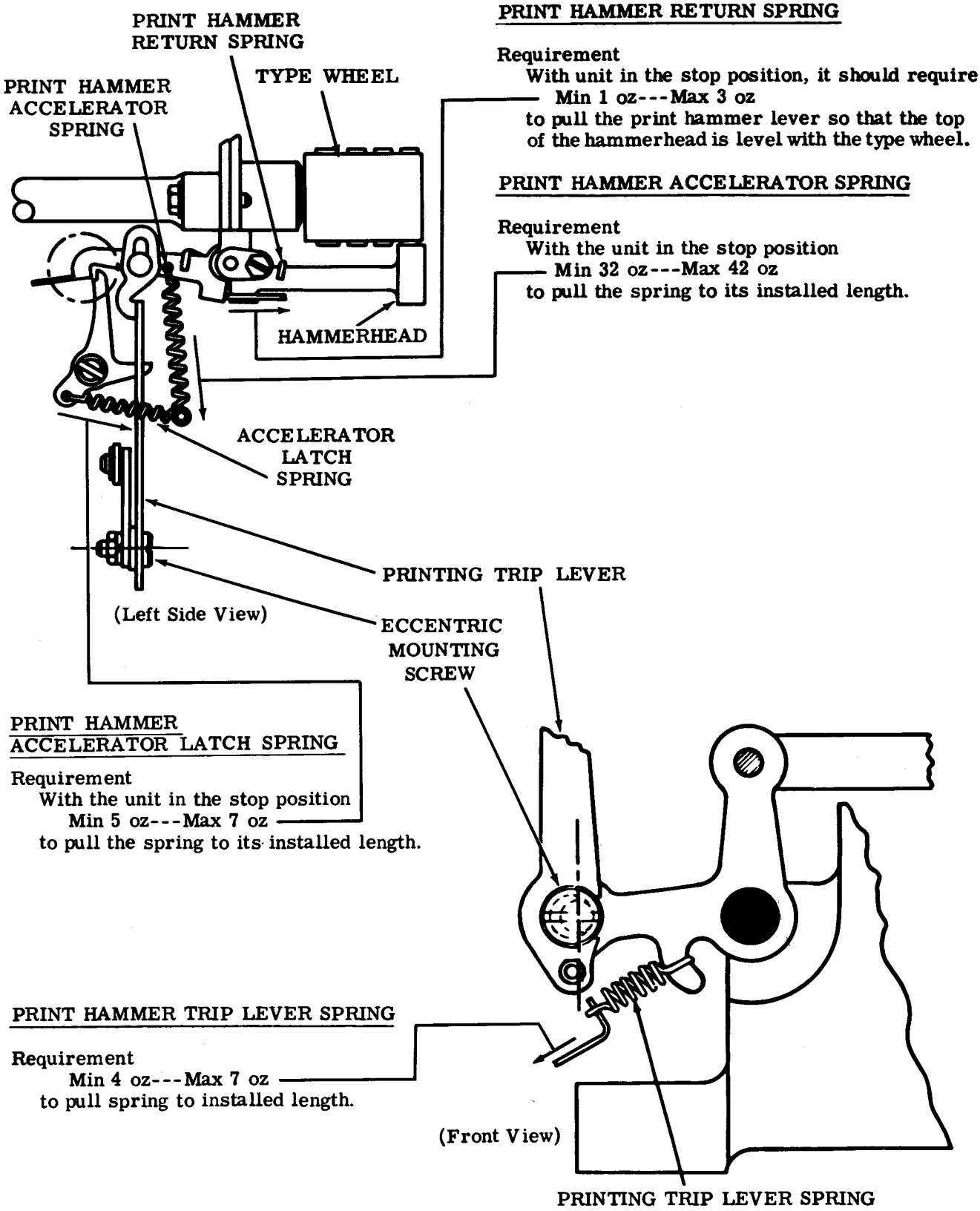

PRINT HAMMER RETURN SPRING

Requirement
With unit in the stop position, it should require
Min 1 oz---Max 3 oz
to pull the print hammer lever so that the top of the hammerhead is level with the type wheel.

PRINT HAMMER ACCELERATOR SPRING

Requirement
With the unit in the stop position
Min 32 oz---Max 42 oz
to pull the spring to its installed length.

PRINT HAMMER ACCELERATOR LATCH SPRING

Requirement
With the unit in the stop position
Min 5 oz---Max 7 oz
to pull the spring to its installed length.

PRINT HAMMER TRIP LEVER SPRING

Requirement
Min 4 oz---Max 7 oz
to pull spring to installed length.

2.59 Typing Mechanism (continued)

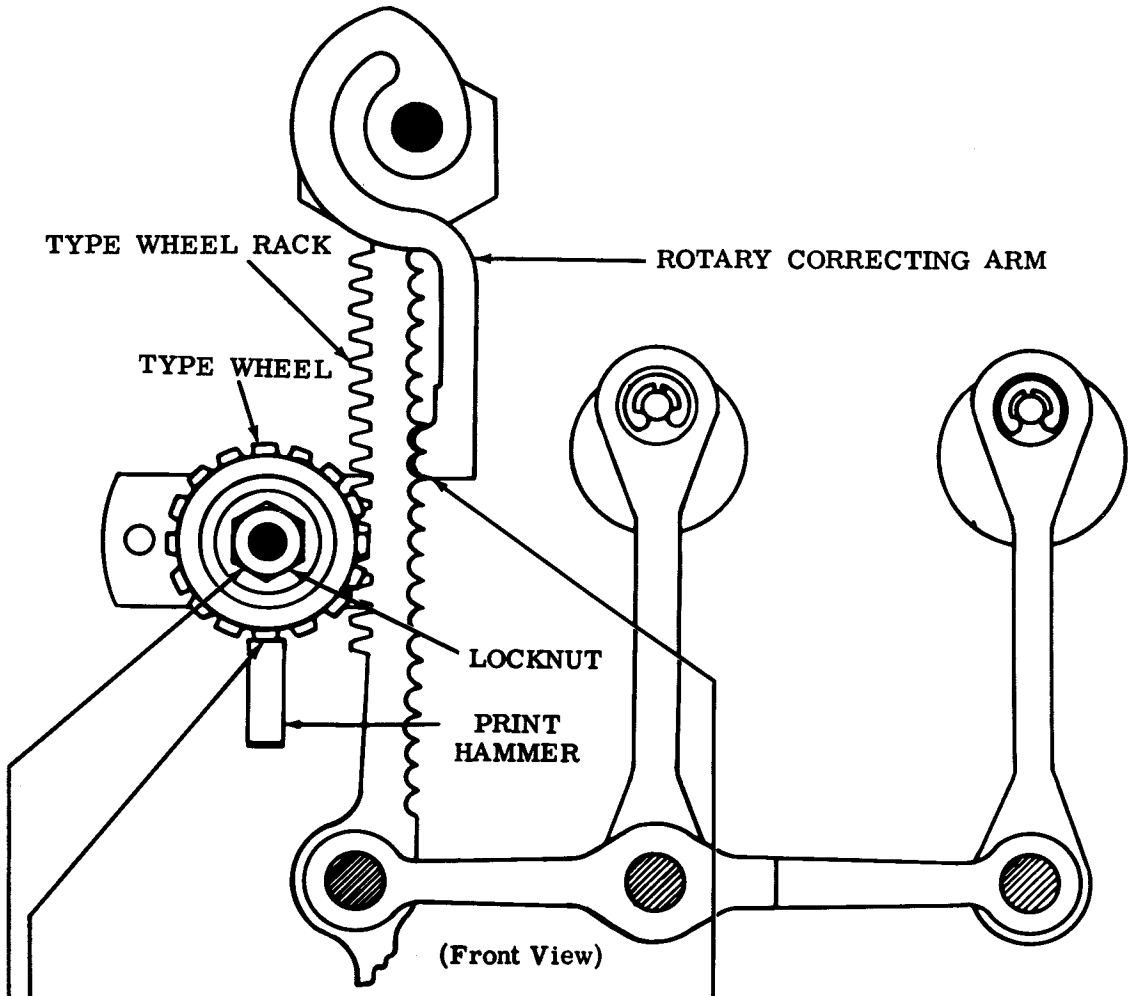

TYPE WHEEL (Preliminary)

To Check
Select H code combination (---4--78). Place rocker bail to extreme left. Correcting arm should be firmly seated in type wheel rack.

Requirement
Type wheel aligned so that full character is printed uniformly and six and one half code hole spaces behind its perforated code hole.

To Adjust
Position type wheel with locknut loosened. Check printing by manually lifting accelerator to latched position and releasing it.

Note: For best results, it may be necessary to make PRINT HAMMER (2.60) adjustment and then refine this adjustment.

TYPE WHEEL (Final)

To Check
With unit operating under power.

Requirement
All characters should be legible and six and one half code hole spaces behind the perforated code holes.

To Adjust
Refine type wheel position with locknut friction tight. Tighten locknut.

Note: For best results, it may be necessary to make PRINT HAMMER (2.60) adjustment and refine this adjustment.

2.60 Typing Mechanism (continued)

PRINT HAMMER

To Check
With unit operating under power.

Requirement
Print hammer aligned with type wheel so as to obtain quality printing with some clearance between the pin points on the feed wheel and the side of the print hammer.

To Adjust
Position print hammer shaft with its locknut friction tight. Tighten locknut.

Note: It may be necessary to make the TYPE WHEEL (Final) (2.59) adjustment and then refine this adjustment.

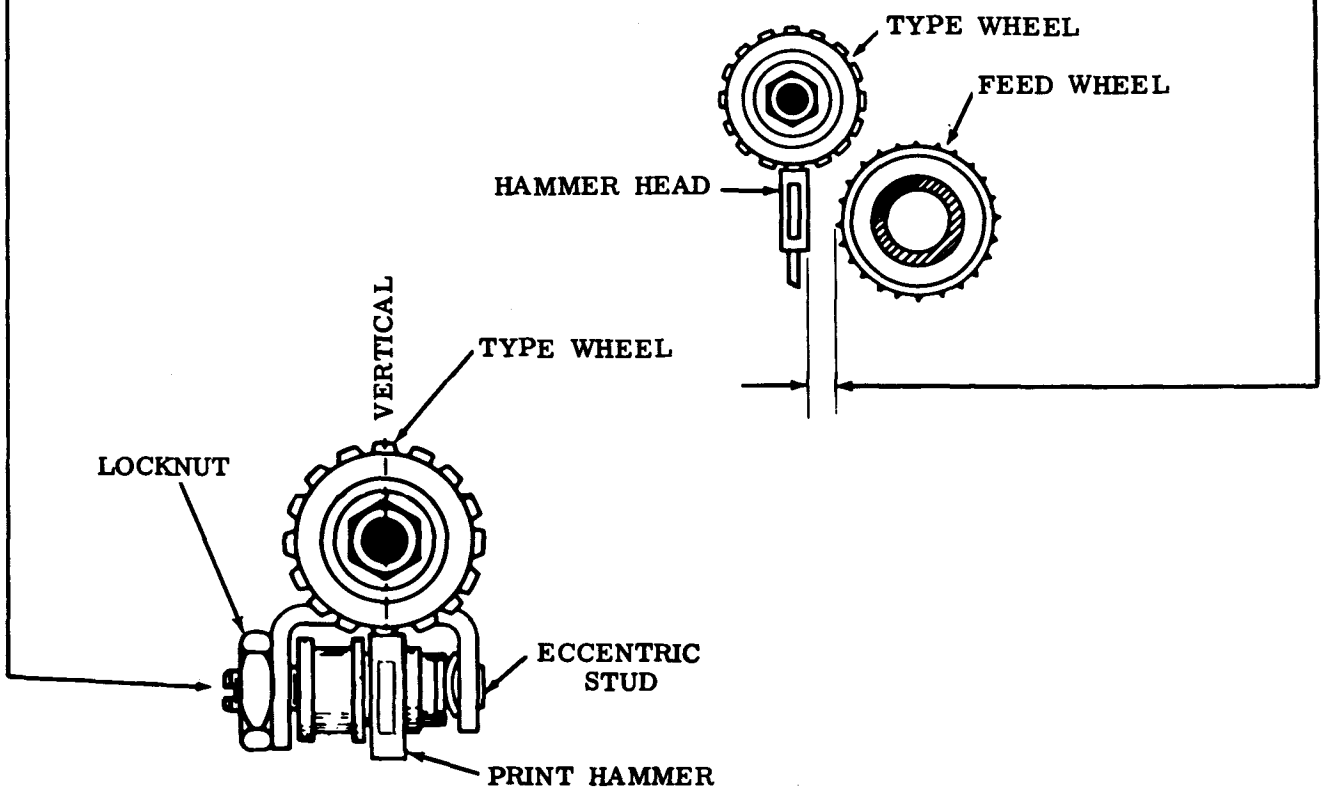

(Front View)

2.61 Typing Mechanism (continued)

FEED PAWL SPRING

Requirement
With rocker bail to extreme right
Min 4 oz---Max 6 oz
to pull feed pawl spring to installed length.

RATCHET WHEEL TORQUE SPRING

Requirement
Min 1 oz---Max 3 oz
applied tangentially to the ratchet wheel to start it to rotate.

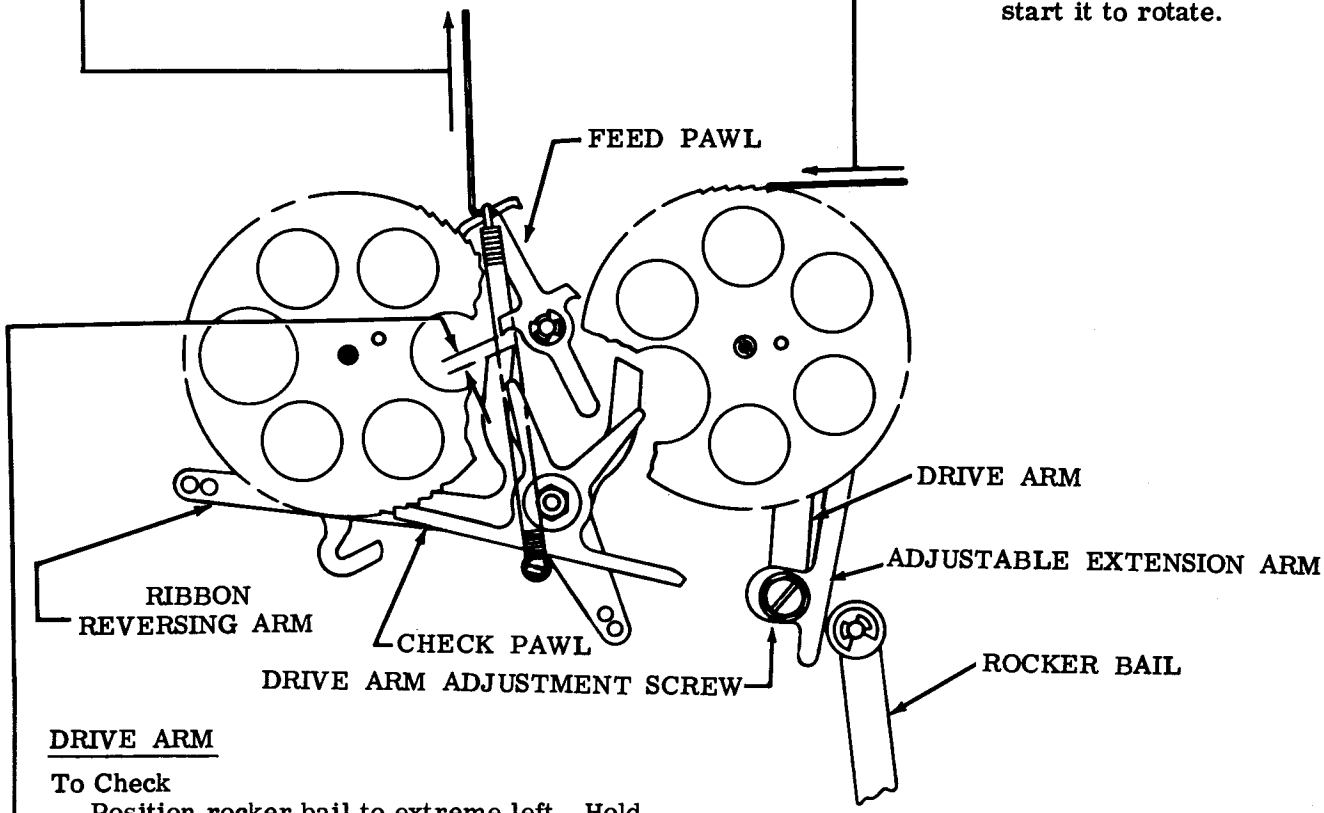

DRIVE ARM

To Check
Position rocker bail to extreme left. Hold the ribbon reversing arm under lower reversing extension of feed pawl.

(1) Requirement
Clearance between blocking edge of ribbon reverse arm and reversing extension of feed pawl
Min some

(2) Requirement
Clearance should not be so great as to allow feed pawl to feed more than two teeth at a time.

(3) Requirement
Feed pawl detented in both its right and left position.

To Adjust
Position drive arm adjustable extension lever with its mounting screw loosened. Tighten screw.

2.62 Typing and Tape Depressor Mechanisms

DRIVE ARM SPRING

Requirement
With rocker bail to extreme right
Min 9 oz---Max 14 oz
to pull drive arm spring to installed length.

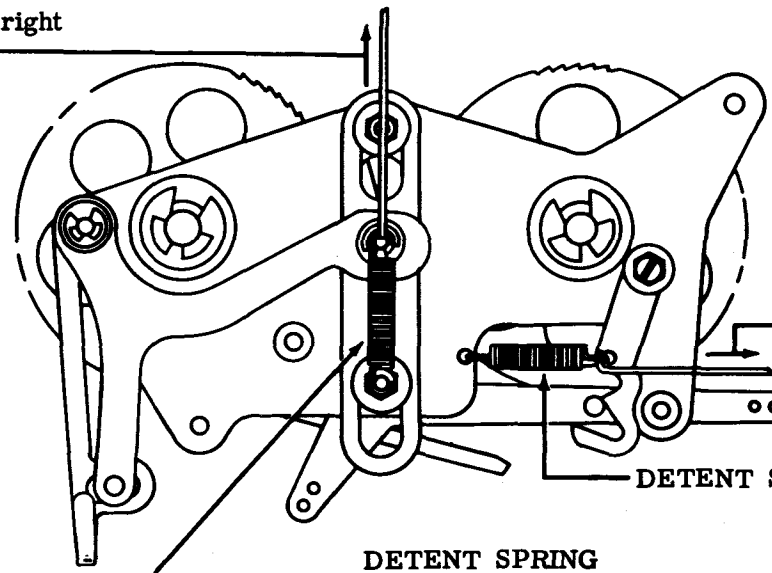

DETENT SPRING

Requirement
With reversing arm in its extreme right or left position
Min 2 oz---Max 4 oz
to pull detent spring to its installed length.

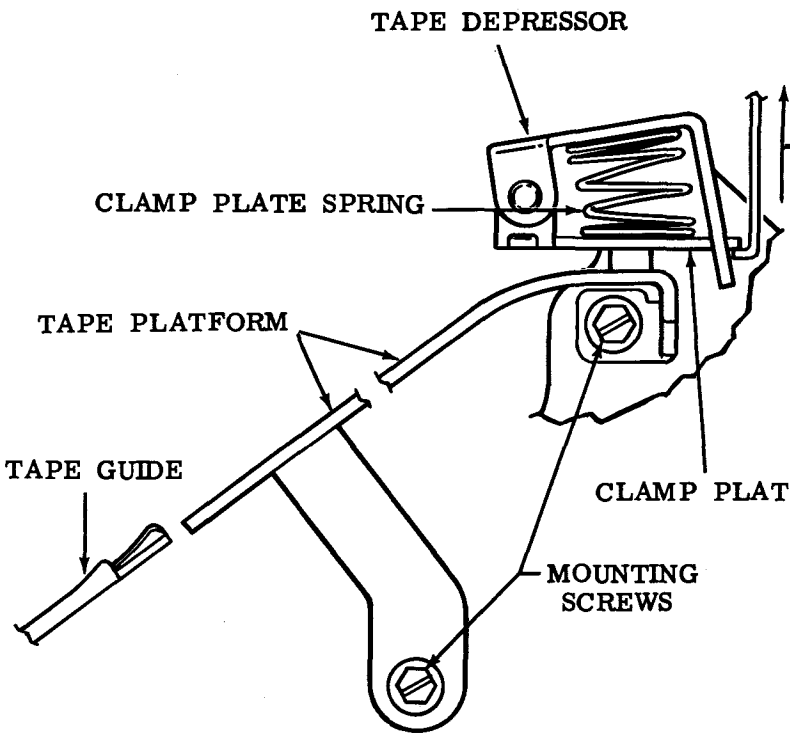

(Front View)

TAPE PLATFORM (Early Design)

Requirement
Top surface of tape platform should be flush with top surface of tape guide.

To Adjust
With tape platform mounting screws loosened, position tape platform. Tighten screws.

CLAMP PLATE SPRING (Early Design)

Requirement
Function clutch disengaged and latched. Clamp plate spring bowed to the right.
Min 18 oz---Max 24 oz
to move clamp plate from bottom of slot in tape depressor.

2.63 Tape Depressor Mechanism (continued)

CLAMP PLATE SCREW WITH DISC (Latest Design)

Requirement
Loosen nut and turn screw with disc so that a new area of the disc contacts the tape. Tighten nut.

Note: This adjustment should be made once every lubrication period or when the ten holes per inch requirement is not being held.

CLAMP PLATE SPRING (Latest Design)

Requirement
Min 30 grams applied to tab of clamp plate to start it moving

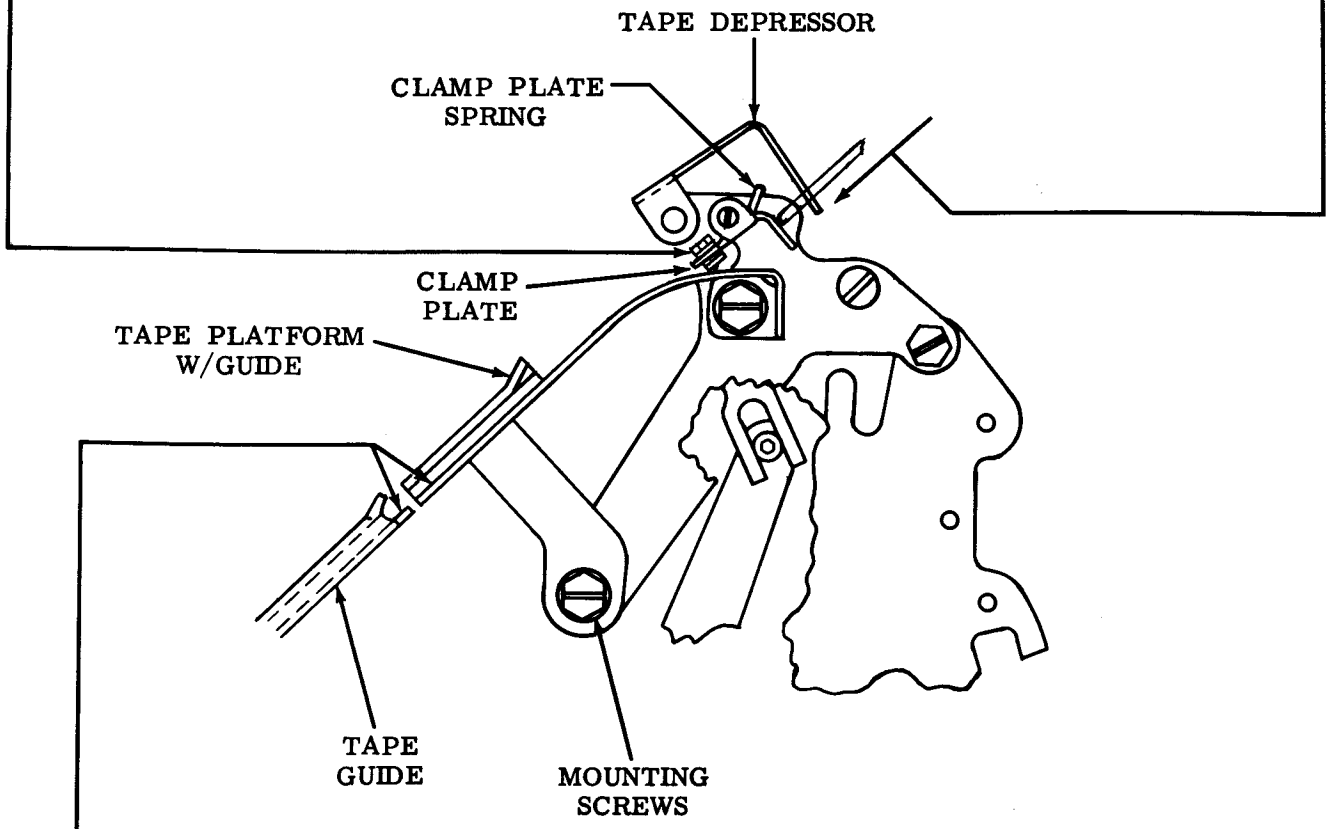

TAPE PLATFORM (Latest Design)

Requirement
The top surface of tape platform and tape guide should be flush with the top surface of tape guide.

To Adjust
With tape platform mounting screws loosened, position tape platform. Tighten screws.

3. VARIABLE FEATURES

3.01 Remote Control Noninterfering RUBOUT Tape Feed-Out Mechanism

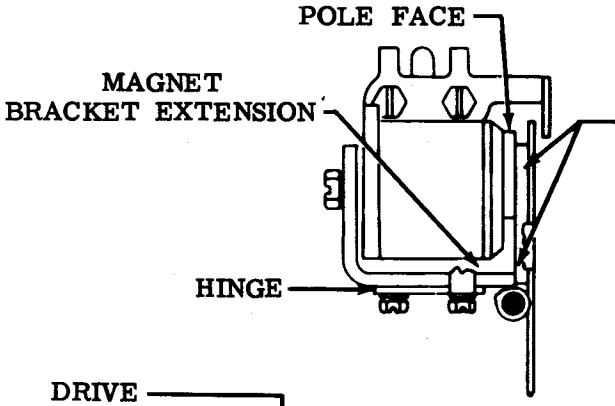

(A) ARMATURE HINGE

Requirement
With armature manually operated, it should be flush against pole face and magnet bracket extension.

To Adjust
Loosen armature hinge bracket mounting screws, position armature and tighten screws.

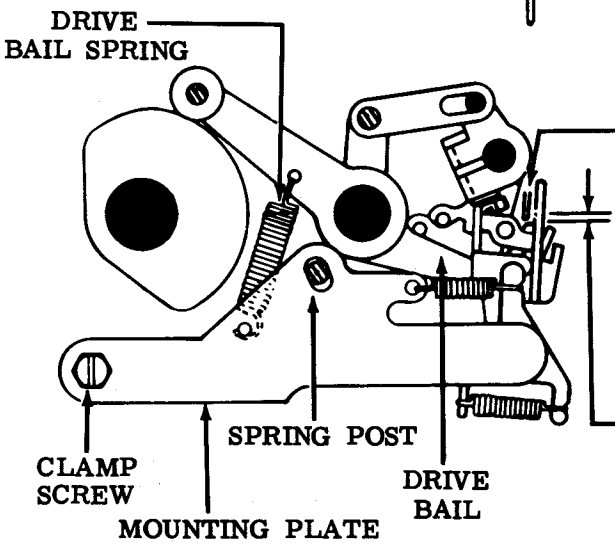

(B) DRIVE BAIL SPRING

Requirement
Rotate mainshaft until drive bail is on high part of its cam.
Min 23 oz---Max 32 oz
to start the drive bail moving.

(C) MOUNTING PLATE

Requirement
With armature in unoperated position. Rotate mainshaft until drive bail is on high part of its cam. Clearance between the blocking bail and drive bail surface
Min 0.006 inch---Max 0.015 inch

To Adjust
Position blocking bail with mounting plate clamp screw and spring post friction tight. Tighten screw and nut.

(D) MAGNET ASSEMBLY

Requirement
With armature held in operated position, rotate mainshaft until drive bail roller is on high part of its cam. Clearance between blocking bail and right edge of drive bail at its closest point
Min 0.005 inch---Max 0.015 inch

To Adjust
Position magnet assembly, armature held against magnet pole piece with magnet bracket mounting screws friction tight. Tighten screws.

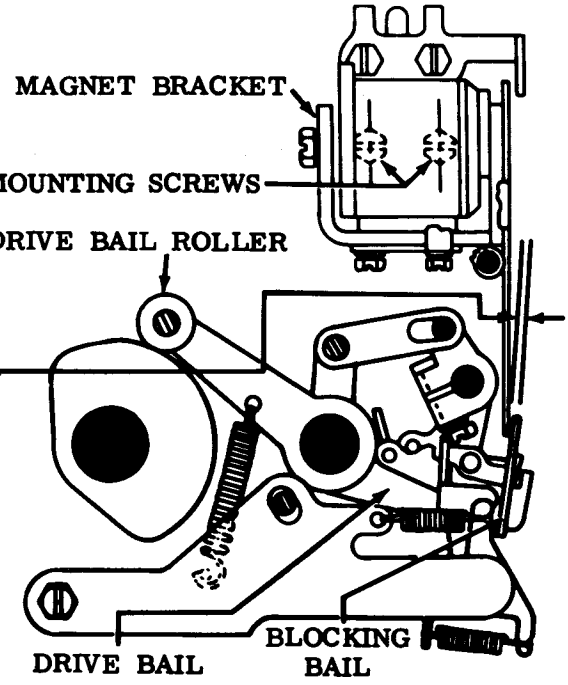

3.02 Remote Control Noninterfering RUBOUT Tape Feed-Out Mechanism (continued)

(A) BLOCKING LATCH TORSION SPRING

Requirement
With armature in unoperated position and drive bail roller on high part of its cam.
Min 15 grams---Max 40 grams to start blocking latch moving.

(B) ARMATURE BACKSTOP

(1) Requirement
With armature in operated position, rotate mainshaft until drive bail roller is on high part of its cam. The drive bail should engage the blocking bail by at least 2/3 of its thickness.

(2) Requirement
Min some---Max 0.005 inch between blocking latch and non-repeat latch.

To Adjust
With the armature backstop mounting screws friction tight, position by means of pry point. Tighten screws.

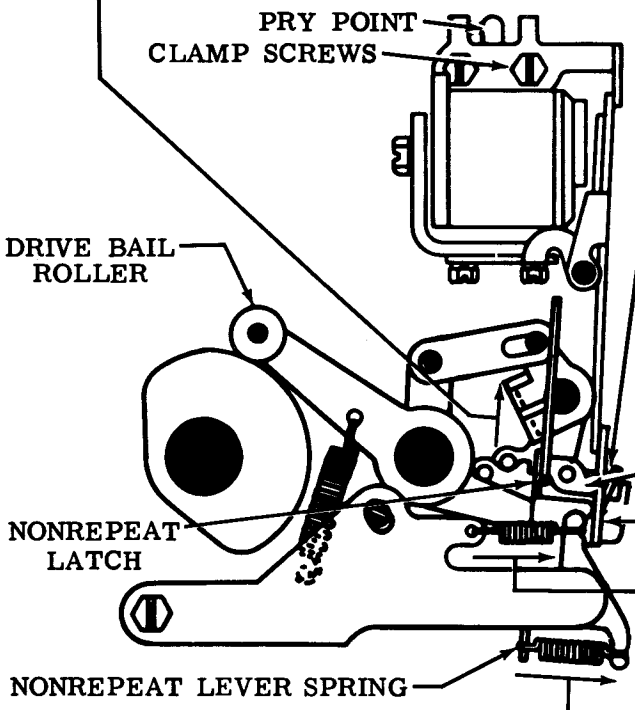

(C) NONREPEAT LEVER SPRING

Requirement
With armature in unoperated position and drive bail roller on high part of its cam
Min 6 oz---Max 9 oz to pull spring to installed length.

(D) BLOCKING BAIL SPRING

Requirement
With armature in unoperated position and drive bail roller on high part of its cam.
Min 3 oz---Max 5 oz to pull spring to installed length.

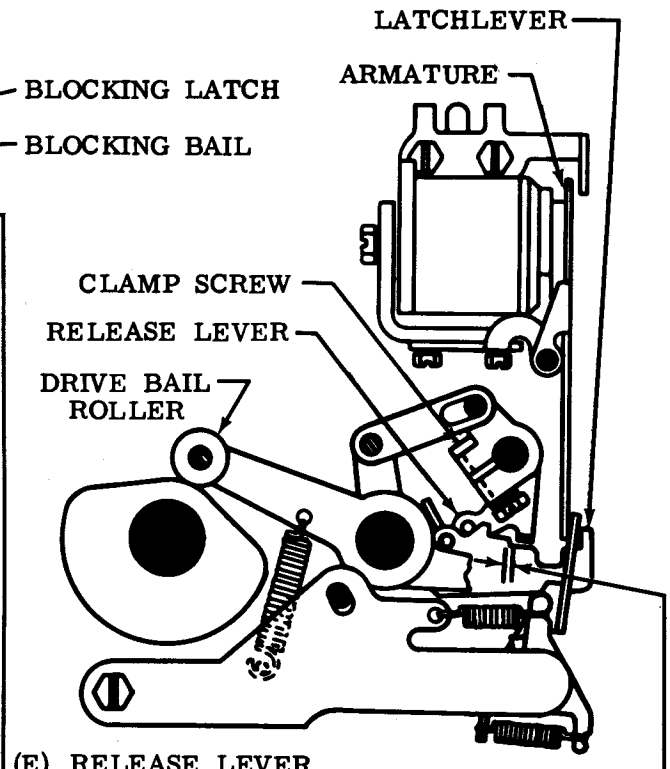

(E) RELEASE LEVER

Requirement
With armature in operated position, rotate mainshaft until drive bail roller is in indent of its cam. Clearance between release lever and latchlever.
Min 0.010 inch---Max 0.025 inch

To Adjust
With clamp screw friction tight, position release lever. Tighten screw.

3.03 Remote Control Noninterfering RUBOUT Tape Feed-Out Mechanism (continued)

RELEASE LEVER SPRING

To Check
Trip selector clutch. Rotate mainshaft until reset cam follower is on peak of reset bail cam. With spring hook, hold front ratchet check pawl away from release lever.

Requirement
Min 5 oz---Max 7 oz
to start release lever moving.

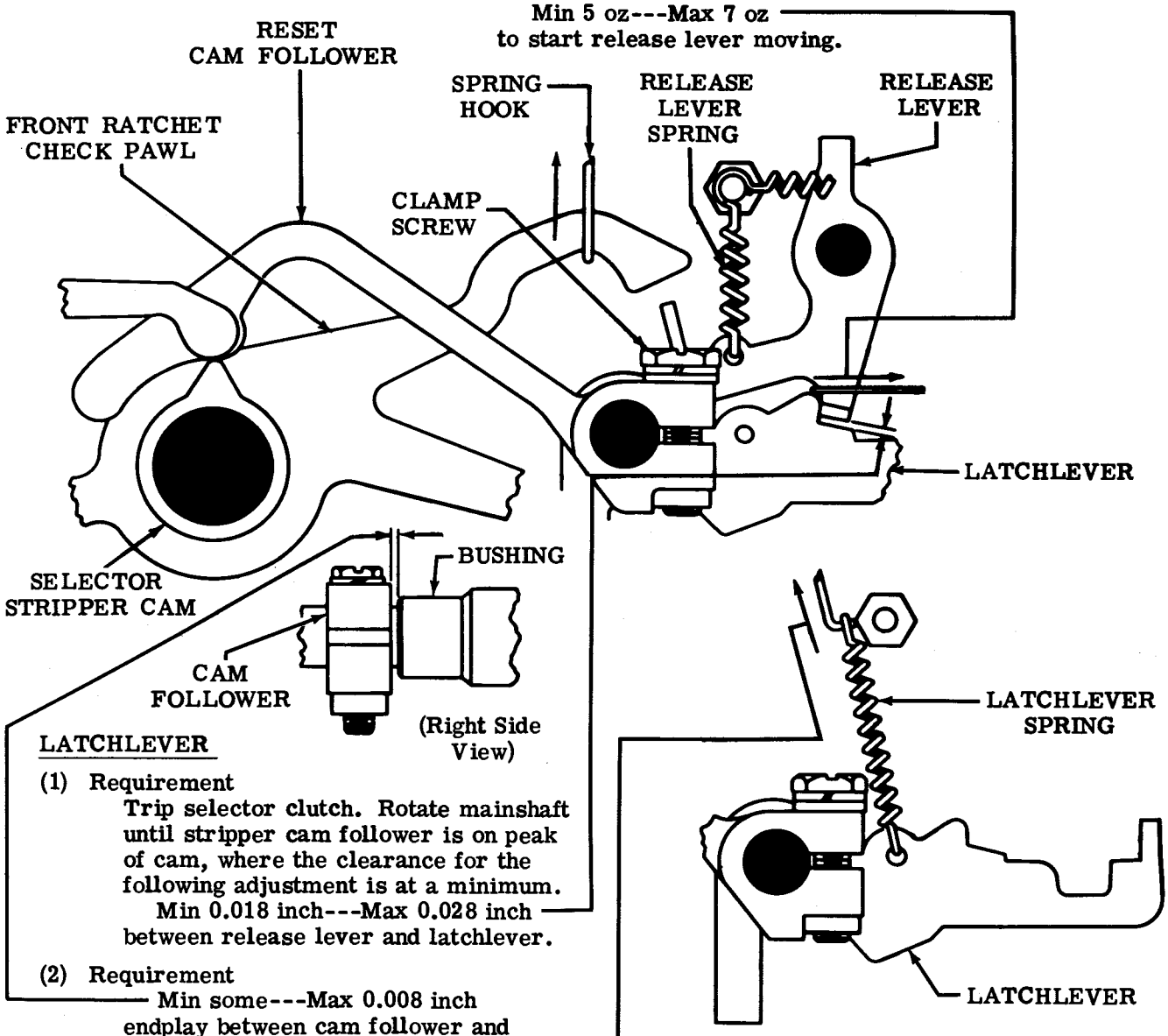

LATCHLEVER

(1) Requirement
Trip selector clutch. Rotate mainshaft until stripper cam follower is on peak of cam, where the clearance for the following adjustment is at a minimum.
Min 0.018 inch---Max 0.028 inch
between release lever and latchlever.

(2) Requirement
Min some---Max 0.008 inch
endplay between cam follower and bushing.

To Adjust
Position latchlever with clamp screw on stripper cam follower loosened.

LATCHLEVER SPRING

To Check
Trip selector clutch. Rotate mainshaft until reset cam follower is on peak of reset bail cam.

Requirement
Min 2 oz---Max 4 oz
to pull spring to installed length.

3.04 Remote Control Noninterfering RUBOUT Tape Feed-Out Mechanism (continued)

(C) FEED PAWL AND FRONT CHECK PAWL SPRINGS

Requirement
With unit in feed out cycle (see "To Check" of REAR CHECK PAWL adjustment below).
Min 1 oz---Max 3 oz
to pull each spring to installed length.

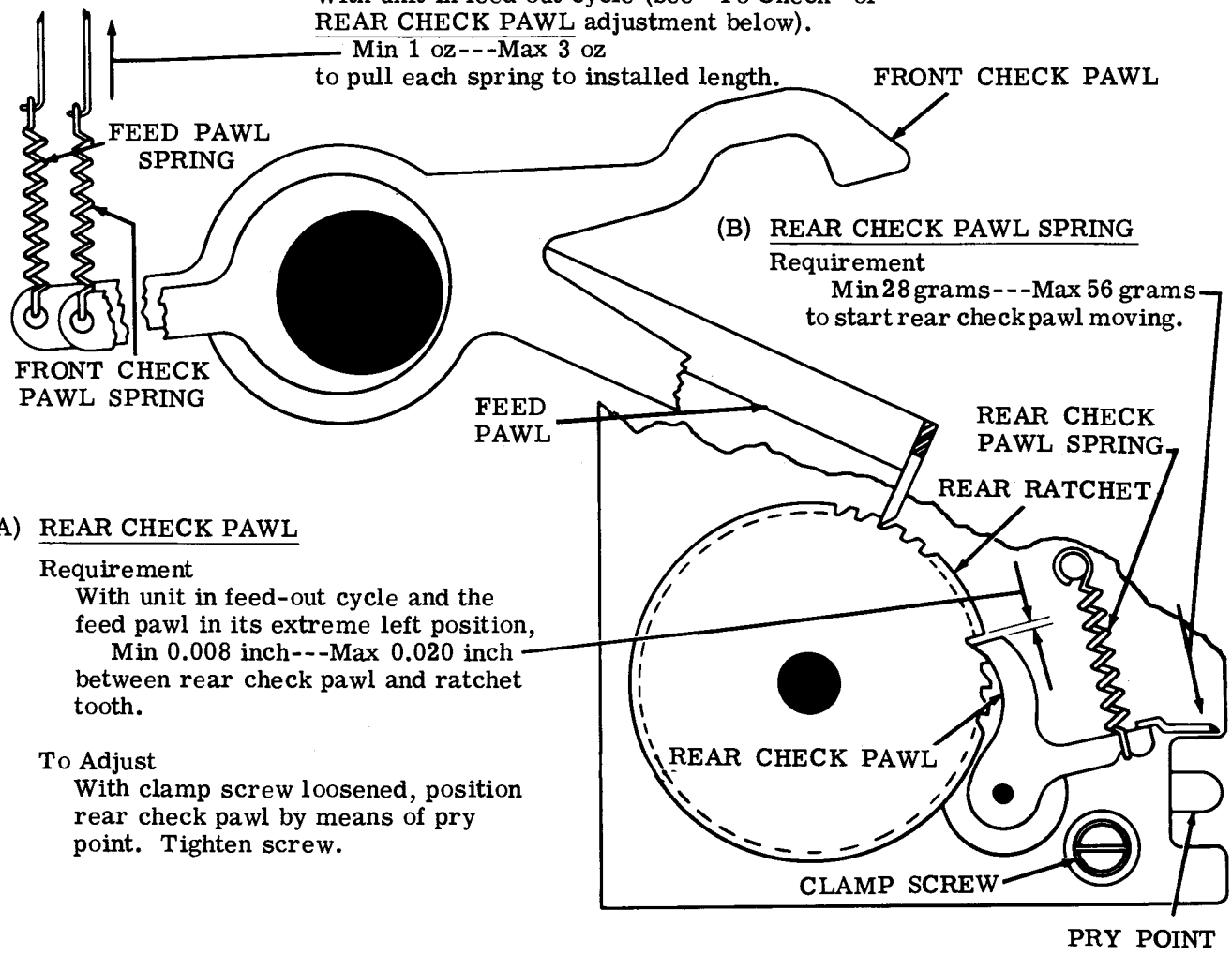

(B) REAR CHECK PAWL SPRING

Requirement
Min 28 grams---Max 56 grams
to start rear check pawl moving.

(A) REAR CHECK PAWL

Requirement
With unit in feed-out cycle and the feed pawl in its extreme left position,
Min 0.008 inch---Max 0.020 inch
between rear check pawl and ratchet tooth.

To Adjust
With clamp screw loosened, position rear check pawl by means of pry point. Tighten screw.

Note: Proceed to FRONT RATCHET STOP POSITION (3.05) adjustment.

3.05 Remote Control Noninterfering RUBOUT Tape Feed-Out Mechanism (continued)

Note: See REAR CHECK PAWL (3.04) adjustment before making this adjustment.

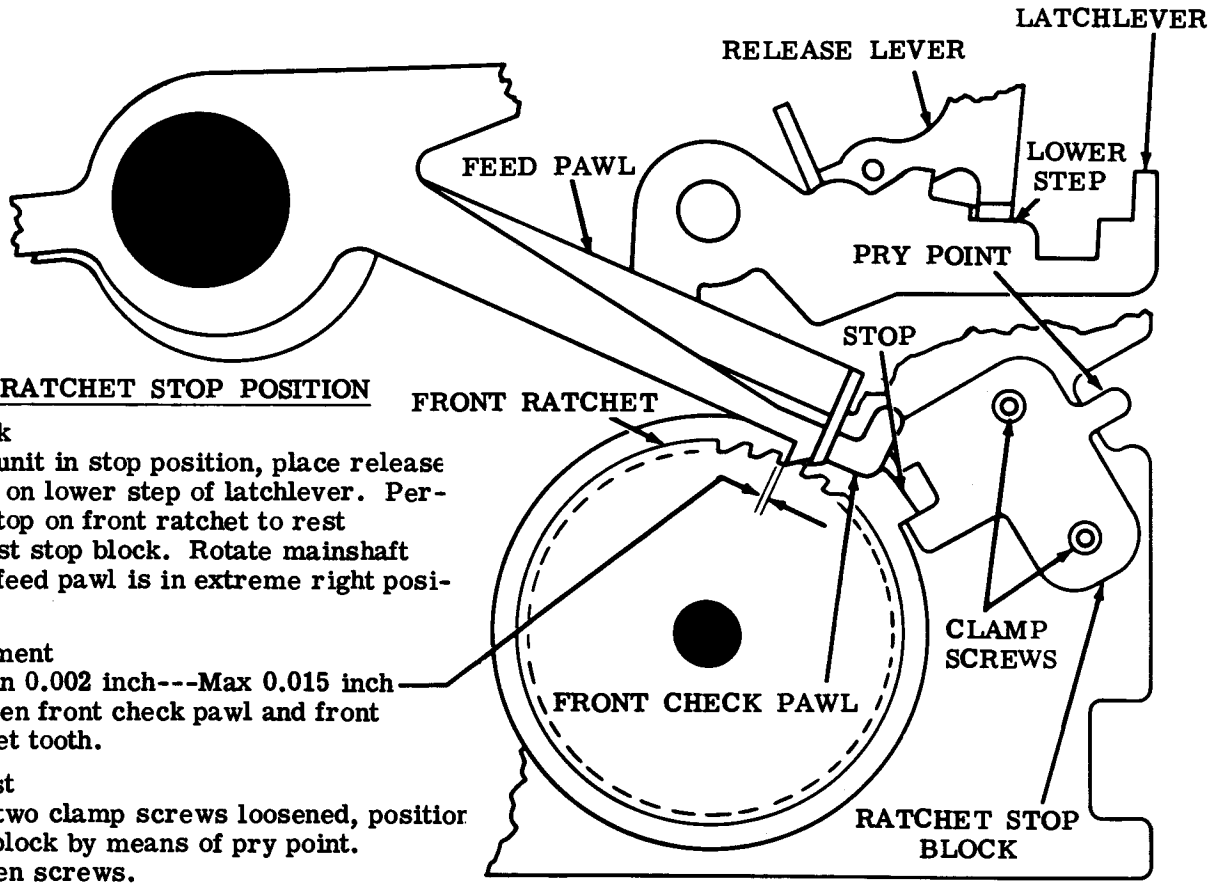

FRONT RATCHET STOP POSITION

To Check
With unit in stop position, place release lever on lower step of latchlever. Permit stop on front ratchet to rest against stop block. Rotate mainshaft until feed pawl is in extreme right position.

Requirement
Min 0.002 inch---Max 0.015 inch between front check pawl and front ratchet tooth.

To Adjust
With two clamp screws loosened, position stop block by means of pry point. Tighten screws.

3.06 Remote Control Noninterfering RUBOUT Tape Feed-Out Mechanism (continued)

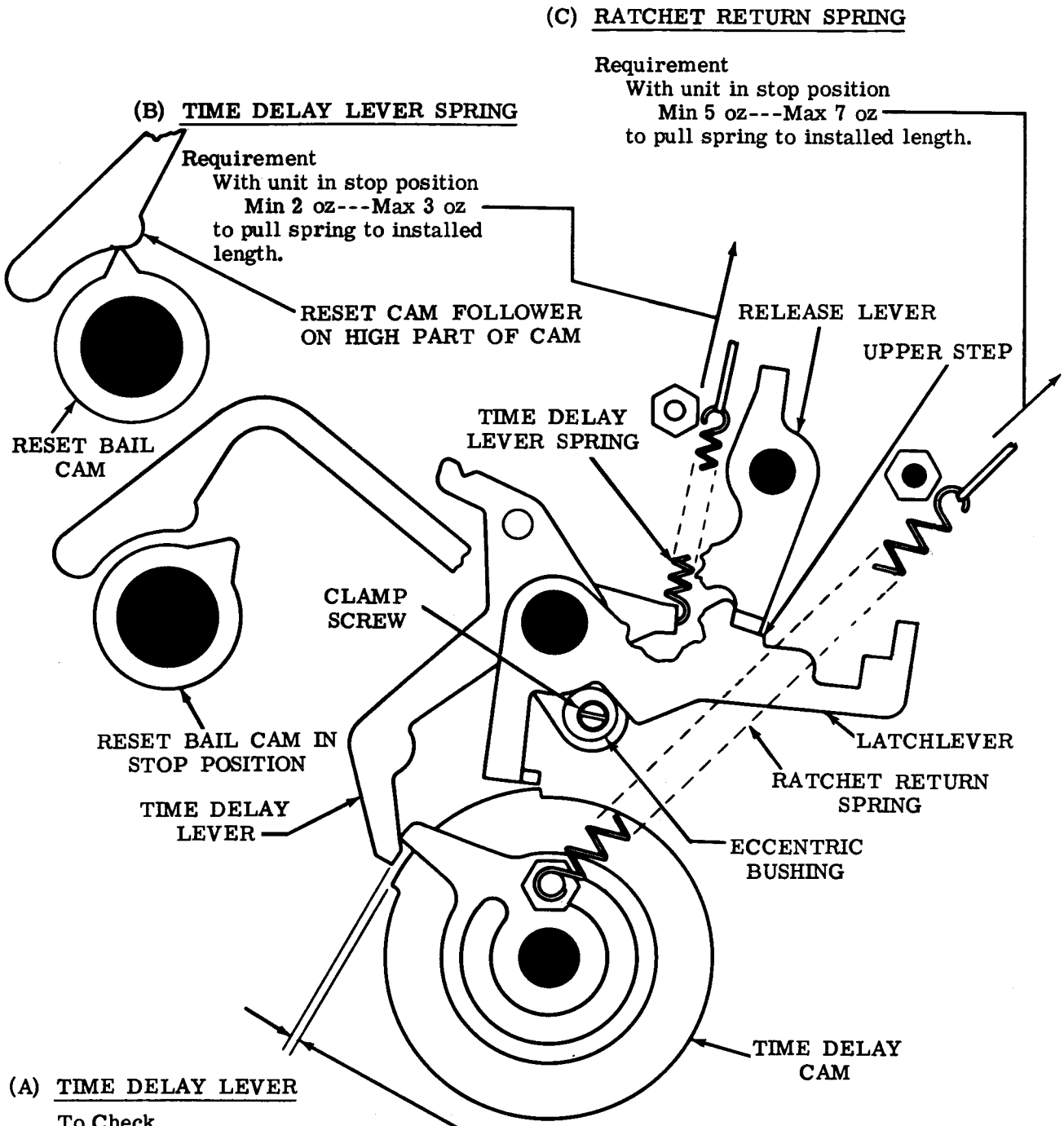

(A) TIME DELAY LEVER

To Check
Trip selector clutch and rotate mainshaft until reset cam follower is on high part of reset bail cam.

(1) Requirement
Min 0.040 inch---Max 0.060 inch clearance between time delay lever and high part of time delay cam.

(2) Requirement
With unit in stop position
Min some clearance between time delay lever and high part of time delay cam.

To Adjust
With clamp screw loosened, position eccentric bushing. Tighten screw.

3.07 Remote Control Noninterfering RUBOUT Tape Feed-Out Mechanism (continued)

(A) RELEASE ARM

(1) Requirement
With unit in the feed-out cycle, ratchets advanced beyond the time delay, clearance between the drive arm and upper surface of release arm
Min 0.010 inch---Max 0.030 inch
Rotate cam so that the mating surfaces of the drive arm bail and release arm are approximately parallel.

(2) Requirement
With unit in stop position, the surface of the drive arm bail that does not engage the release arm should not exceed
Max 0.015 inch

To Adjust
With clamp nut friction tight, position release arm by means of eccentric screw on time delay lever. Tighten nut.

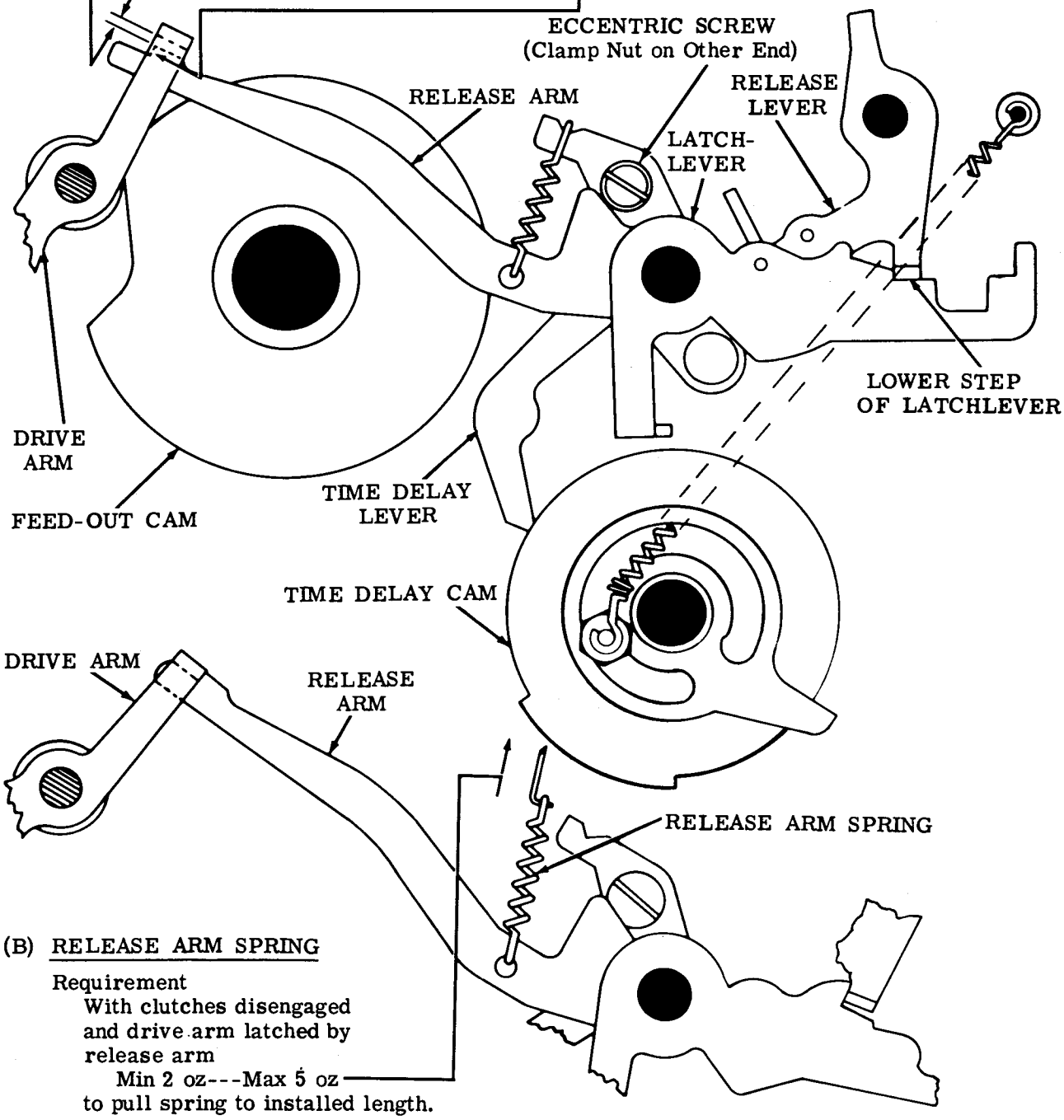

(B) RELEASE ARM SPRING

Requirement
With clutches disengaged and drive arm latched by release arm
Min 2 oz---Max 5 oz
to pull spring to installed length.

3.08 Remote Control Noninterfering RUBOUT Tape Feed-Out Mechanism (continued)

(A) DRIVE ARM SPRING

Requirement

With unit in feed-out cycle and drive arm roller held firmly against its cam indent

Min 42 oz---Max 50 oz

to pull spring to installed length.

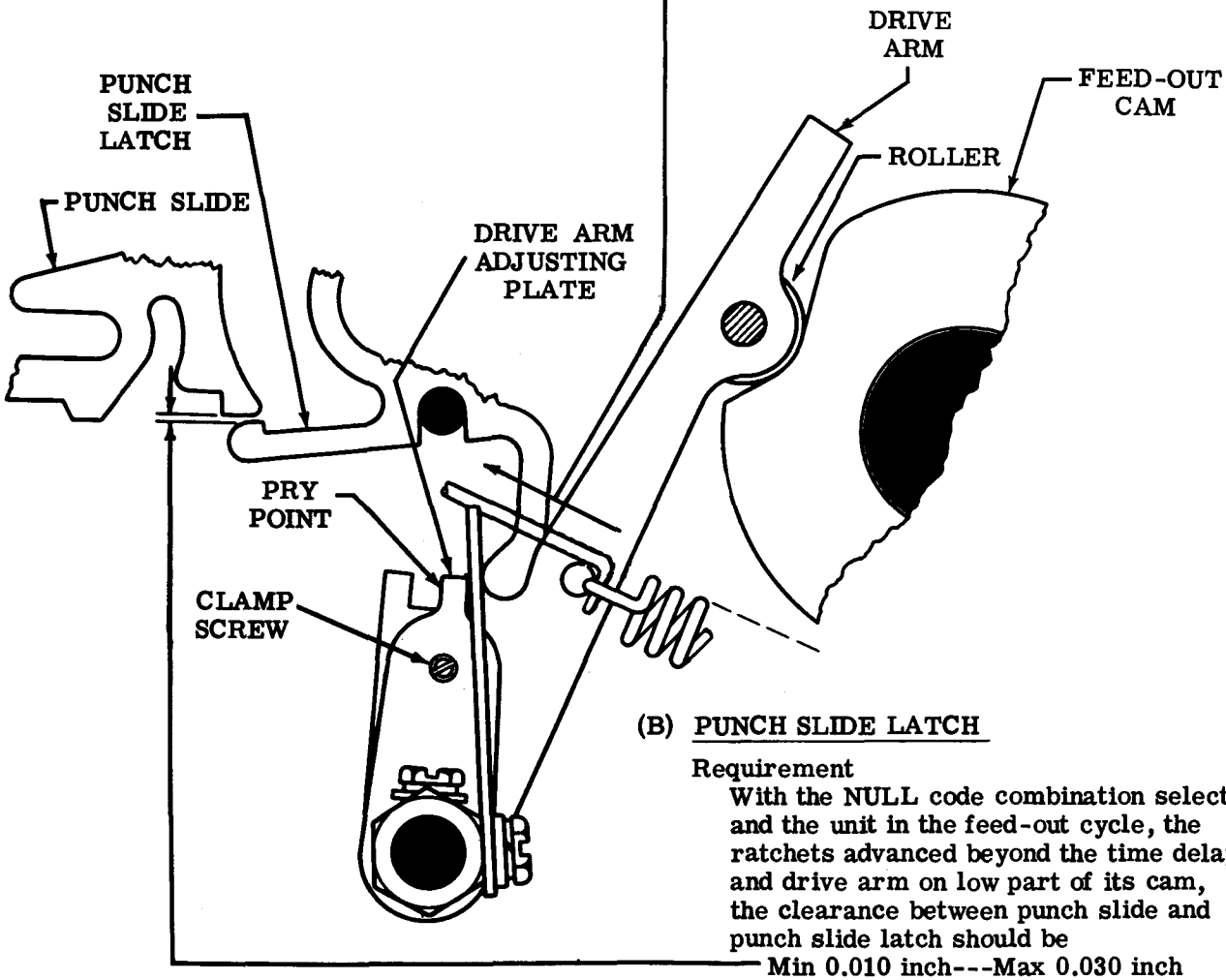

(B) PUNCH SLIDE LATCH

Requirement

With the NULL code combination selected and the unit in the feed-out cycle, the ratchets advanced beyond the time delay and drive arm on low part of its cam, the clearance between punch slide and punch slide latch should be

Min 0.010 inch---Max 0.030 inch

at slide where clearance is a minimum.

Note: See that the reset bail is tripped.

To Adjust

With clamp screw loosened, position drive arm adjusting plate by means of its pry point. Tighten screw.

3.09 Remote Control Noninterfering RUBOUT Tape Feed-Out Mechanism (continued)

(B) ADJUSTING LEVER

To Check

Place unit in feed-out cycle by positioning release lever on lower step of latch-lever and advancing high part of time delay cam beyond time delay lever. Position mainshaft so that drive arm roller is on low part of cam.

(1) Requirement

Min 0.010 inch--Max 0.030 inch between release and main trip lever.

(2) Requirement

Some clearance between main trip lever and downstop bracket.

To Adjust

Loosen the clamp screw on the adjusting lever and position, making sure the adjusting lever rides fully on the slide trip lever. Tighten screw.

(A) TRIP CAM FOLLOWER

(1) Requirement

With follower lever on high part of trip cam

Min 0.010 inch---Max 0.030 inch between release and main trip lever.

(2) Requirement

Some clearance between main trip lever and downstop bracket.

To Adjust

With locknut loosened, position adjusting arm by means of pry point. Tighten nut.

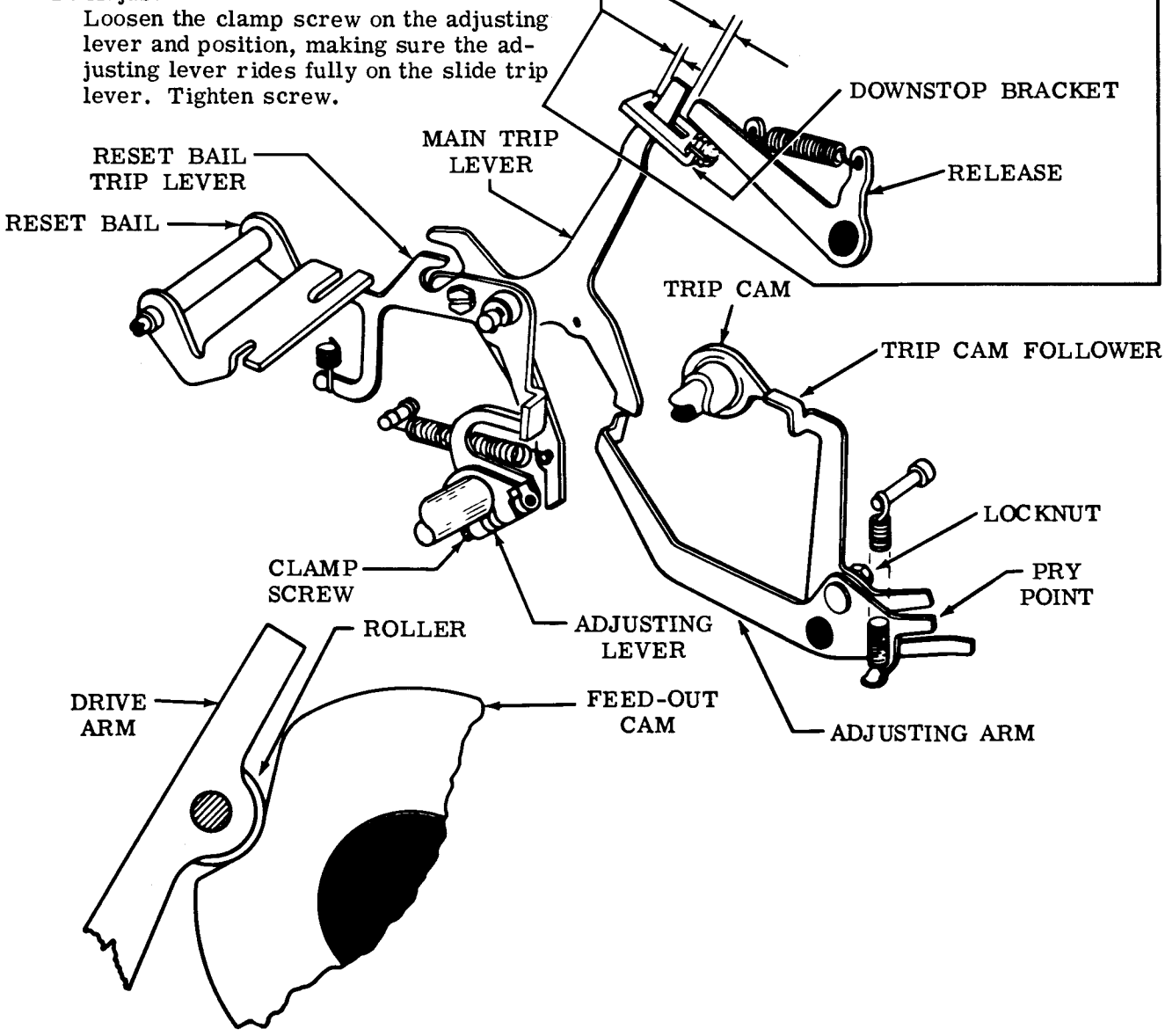

3.10 Remote Control Noninterfering RUBOUT Tape Feed-Out Mechanism (continued)

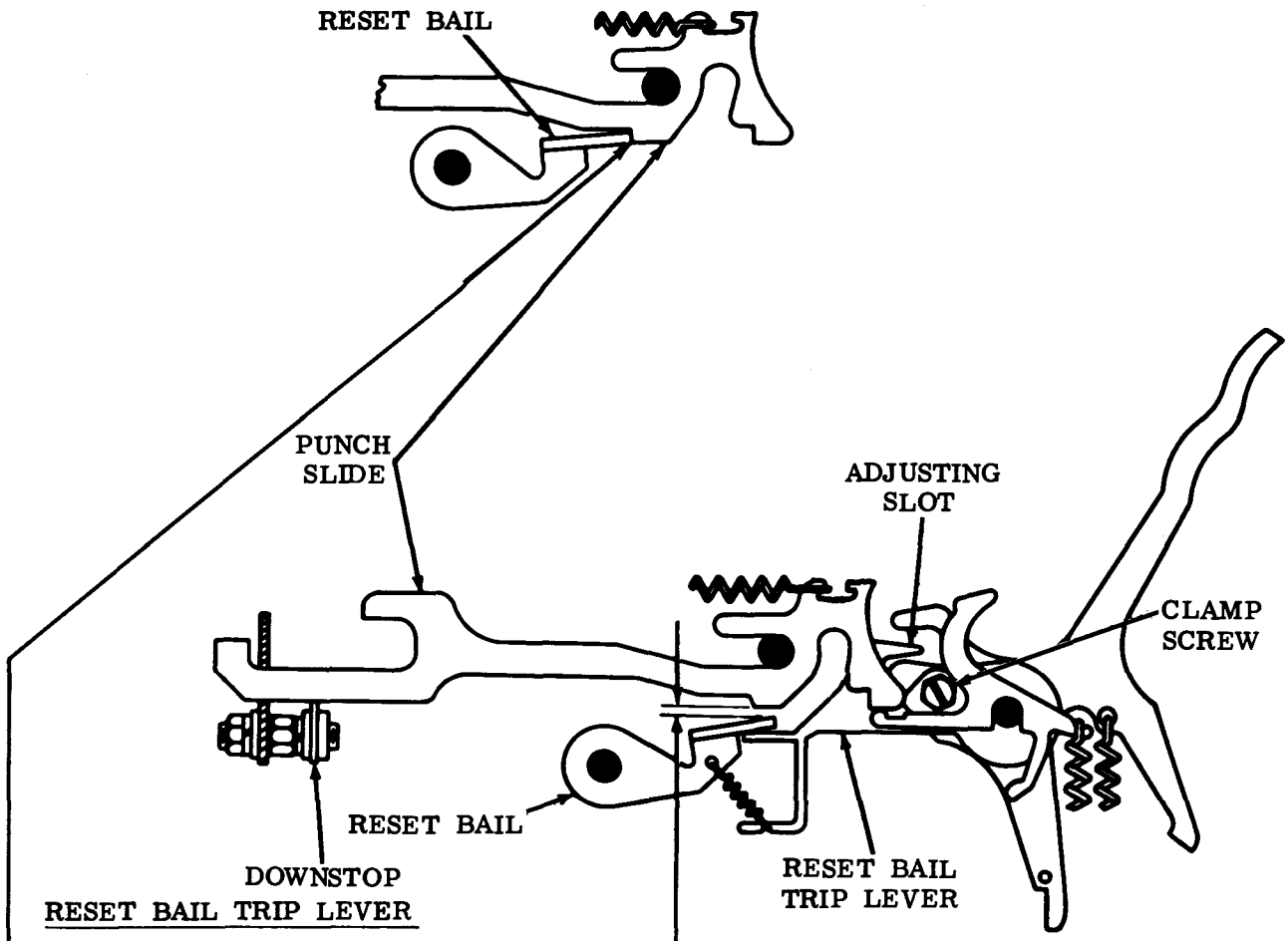

RESET BAIL TRIP LEVER

To Check

Select RUBOUT code combination (12345678). Rotate mainshaft until function clutch trips. Position punch slides against downstop. Trip cam follower on high part of cam.

(1) Requirement

Min 0.008 inch---Max 0.020 inch between punch slide and reset bail.

(2) Requirement

With clutches fully disengaged and latched, reset bail should fully engage notches in punch slides.

To Adjust

With clamp screw loosened, position reset bail trip lever by means of adjusting slot. Tighten screw.

3.11 Remote Control Noninterfering RUBOUT Tape Feed-Out Mechanism (continued)

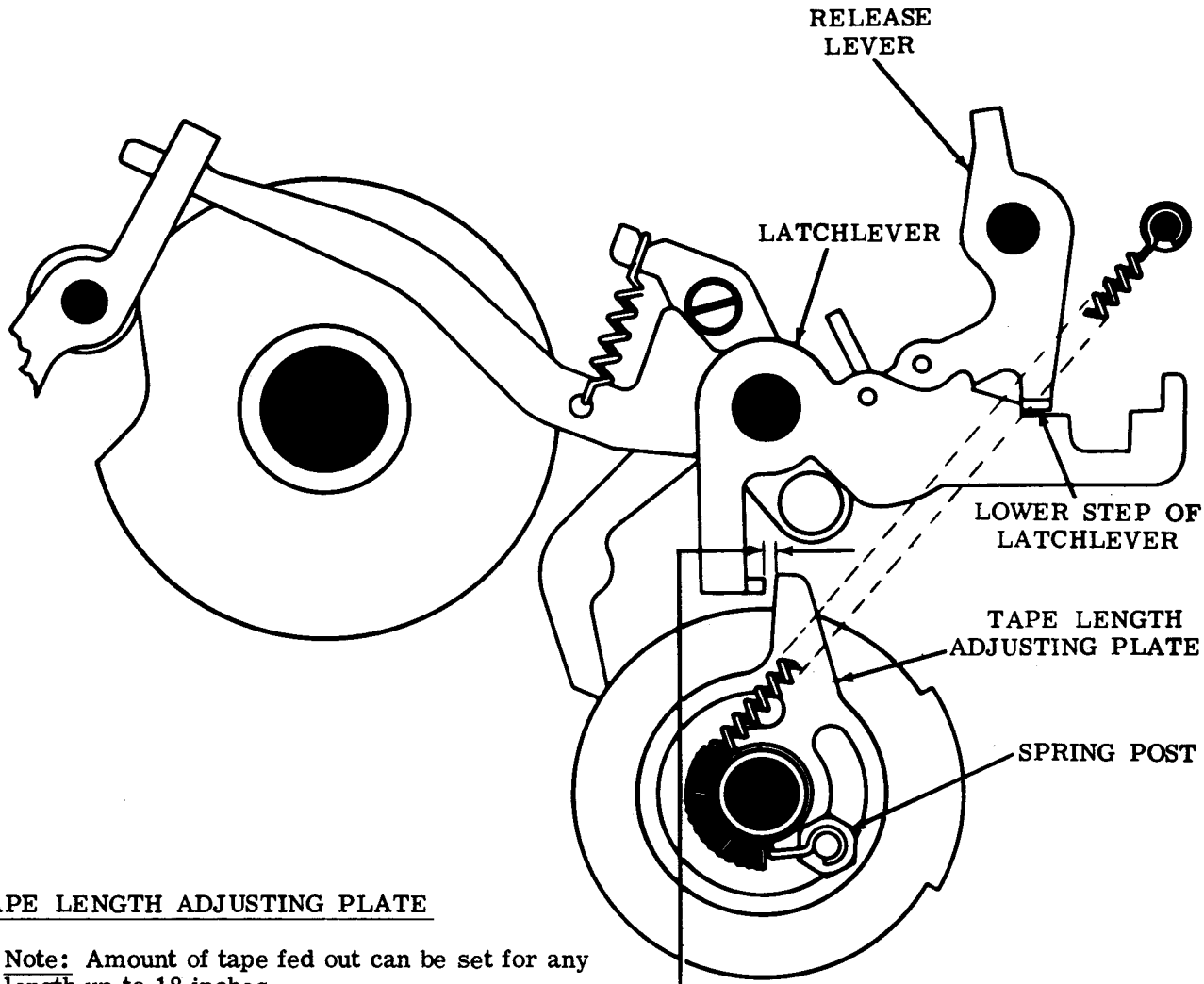

TAPE LENGTH ADJUSTING PLATE

Note: Amount of tape fed out can be set for any length up to 18 inches.

(1) Requirement
Place unit in feed-out cycle by positioning release lever on lower step of latchlever. Manually advance ratchets so that front ratchet is in the tooth preceding trip off. Rotate mainshaft until feed pawl is in the extreme left position. Clearance between adjusting plate and latchlever projection
Min 0.002 inch---Max 0.020 inch

(2) Requirement
When operating under power, unit should feed out correct length of tape.

To Adjust
With spring post friction tight. Position adjusting plate. Tighten post.

3.12 Remote Control Noninterfering RUBOUT Tape Feed-Out Mechanism (continued)

(B) RESET BAIL LATCH SPRING

Requirement
With unit in stop condition
Min 1 oz---Max 3 oz
to start reset bail latch moving.

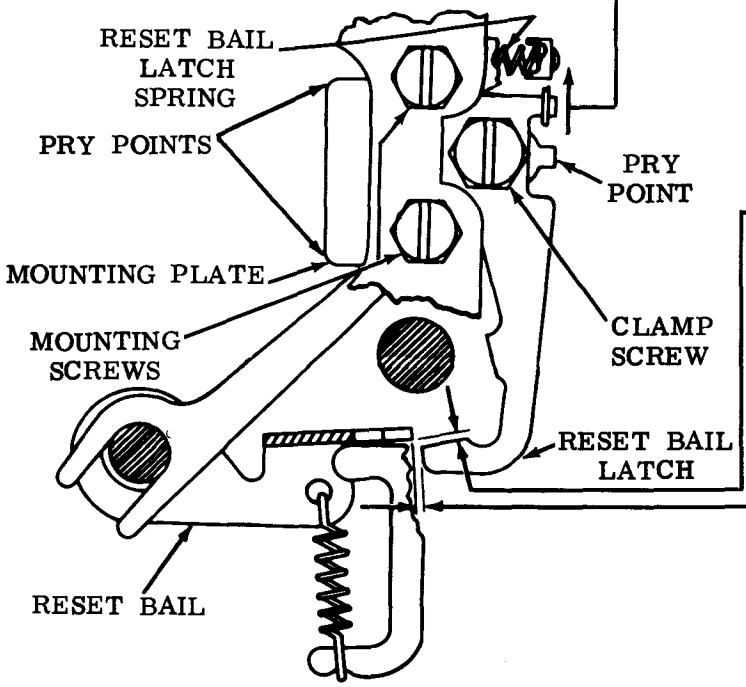

(A) RESET BAIL LATCH

(1) To Check (Vertical Clearance)
Select RUBOUT code combination (12345678). Rotate mainshaft until function clutch trips and punch slides are to extreme left. Manually set up the NULL code combination (--------) in selector. Rotate mainshaft until punch slides are just latched.

(1) Requirement
Min 0.008 inch---Max 0.020 inch between reset bail and reset bail latch.

To Adjust
With mounting screws loosened, position mounting plate by means of pry points. Tighten screws.

(2) Requirement (Horizontal Clearance)
With clutches disengaged,
Min 0.005 inch---Max 0.020 inch between reset bail and reset bail latch.

To Adjust
With a clamp screw loosened, position bail latch by means of its pry points so its latching surface is approximately at midpoint in thickness of the reset bail. Tighten screw.

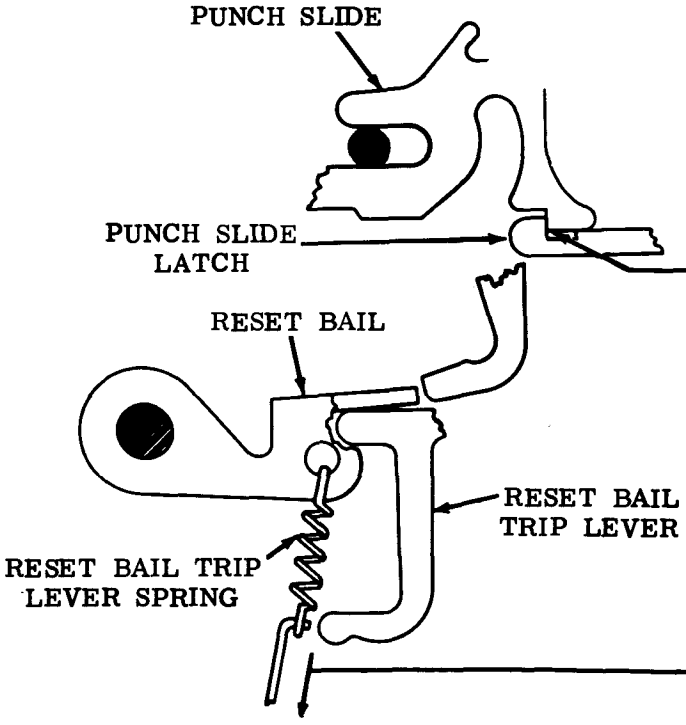

(2) To Check
Select RUBOUT code combination (12345678). Rotate mainshaft until function clutch trips. Manually set up the NULL code combination (--------). Rotate mainshaft to stop position.

Requirement
Punch slides latched by punch slide latches.

To Adjust
Refine requirements (1) and (2) above.

(C) RESET BAIL TRIP LEVER SPRING

To Check
Disengage both clutches. Trip function clutch by pivoting main trip lever counterclockwise. Hold reset bail trip lever up against reset bail.

Requirement
Min 18 oz---Max 24 oz
to pull spring to installed length.

3.13 End of Feed-Out Contacts for Noninterfering RUBOUT Tape Feed-Out Mechanism

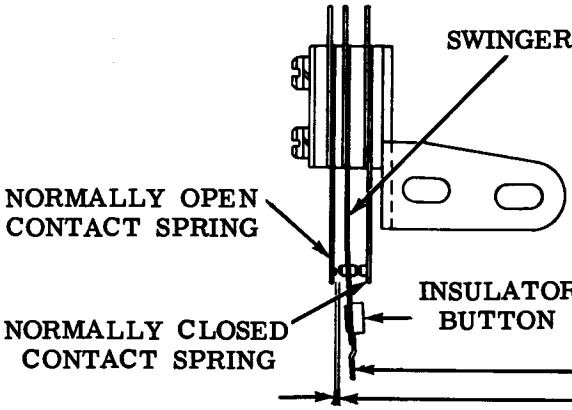

(A) CONTACT SWINGER (Preliminary)

Requirement
Min 25 grams---Max 40 grams to open normally closed contact.

To Adjust
Bend swinger.

(B) CONTACT SPRING GAP (Preliminary)

Requirement
Normally open contact gap
Min 0.012 inch---Max 0.020 inch

To Adjust
Bend contact spring.

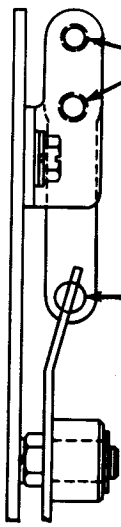

(C) CONTACT ASSEMBLY

Requirement
Insulator button on swinger should be centrally located in bail extension yoke.

To Adjust
With mounting screws loosened, position contact assembly. Tighten screws.

LATCHLEVER SPRING

Requirement
Trip selector and rotate mainshaft until stripper cam follower lies on high part of its cam
Min 9 oz---Max 12 oz
to stretch spring to its installed length.

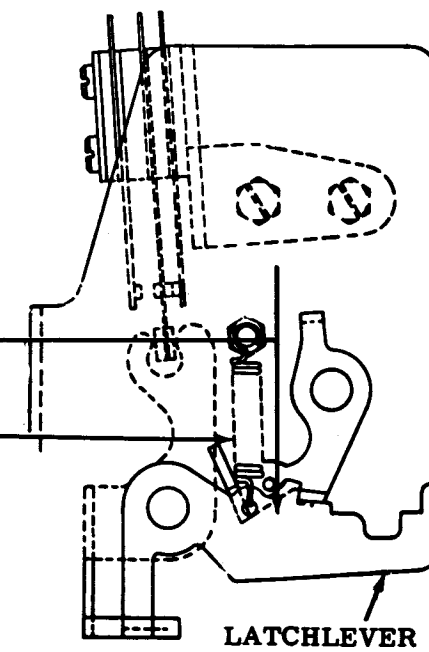

3.14 End of Feed-Out Contacts for Noninterfering RUBOUT Tape Feed-Out Mechanism (continued)

Note: See preliminary contact adjustments, 3.13.

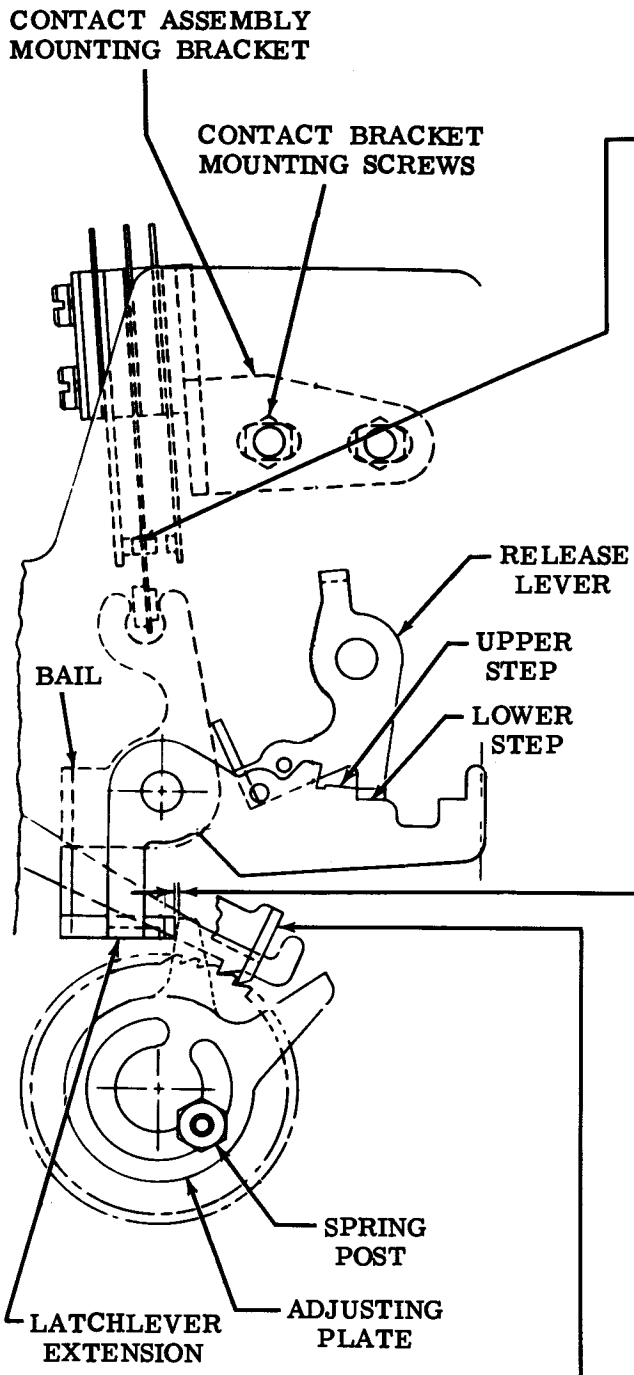

(D) CONTACT ASSEMBLY MOUNTING BRACKET

(1) Requirement (Unit in stop position)
When normally open contacts are used and release lever is above lower step of latchlever
— Min 0.005 inch
visible overtravel of swinger after it makes contact with normally open contact.

(2) Requirement
When normally closed contacts are used and release lever is on upper step of latchlever, the normally closed contacts should be closed and bail should not exert any force against swinger insulator button.

To Adjust
Position contacts with bracket mounting screws loosened. Tighten screws.

(E) TAPE LENGTH ADJUSTING PLATE

(1) Requirement
With unit in stop position and release lever on lower step of latchlever, manually advance ratchets so that feed pawl is in the front tooth preceding trip off (not in deep tooth of rear ratchet). Hold bail lightly against latchlever extension
— Min 0.002 inch---Max 0.020 inch
clearance between adjusting plate and bail.

(2) Requirement
When operating under power, unit should feed out correct length of tape.

To Adjust
Position adjusting plate with spring post loosened. Tighten post.

Note: Feed pawl in extreme left position and adjusting plate in dotted position for adjustment (B) only.

3.15 Manual Backspace Mechanism

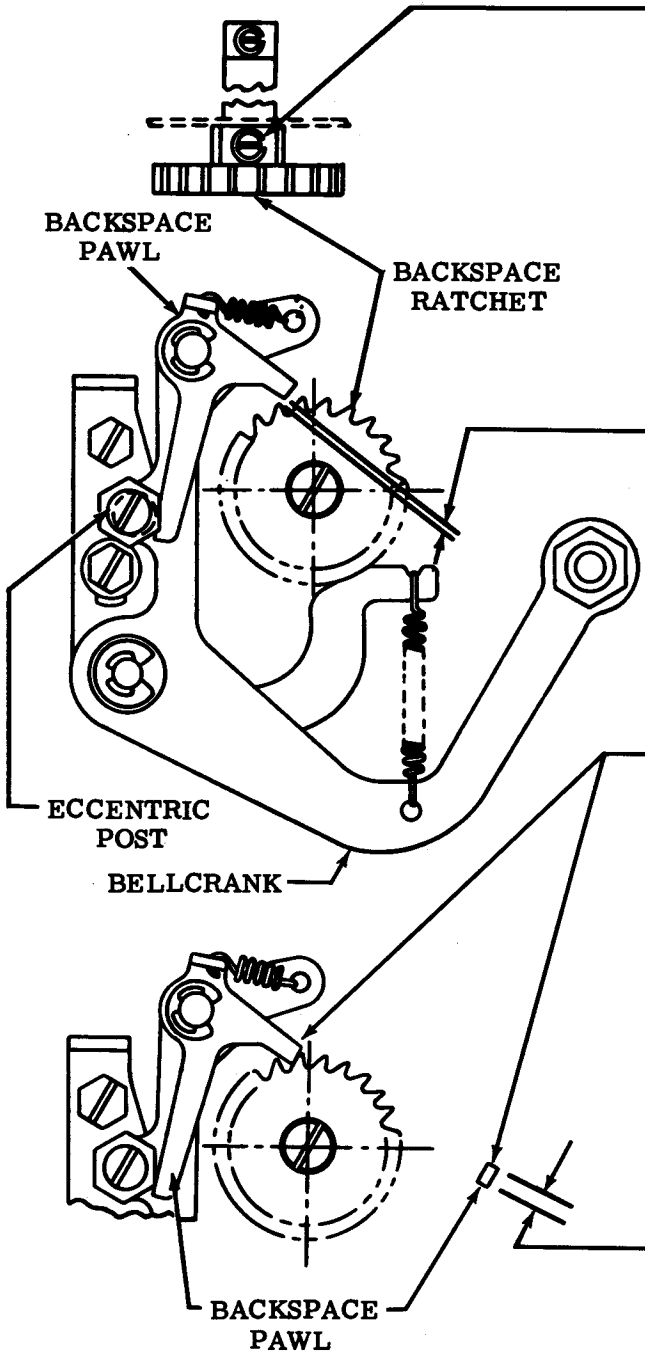

(A) BACKSPACE RATCHET

Requirement

Teeth of backspace and feed wheel ratchets to line up (visual alignment). Feed wheel ratchet to be in detented position.

To Adjust

With adjusting clamp mounting screw friction tight, rotate backspace ratchet to meet the requirement. Tighten screw.

(B) BACKSPACE PAWL CLEARANCE

(1) Requirement (Preliminary)

With backspace bellcrank rotated clockwise, the backspace pawl should miss the first tooth by a clearance of Min 0.003 inch---Max 0.010 inch at point of least clearance.

(2) Requirement (Final)

The backspace pawl should miss the first tooth and engage the second tooth by at least 1/2 of the right engaging surface of the backspace pawl (as gauged by eye) when backspace pawl first contacts the ratchet tooth.

To Adjust

Take up all rotational play of backspace ratchet in relation to feed ratchet by rotating it clockwise at same time rotate bellcrank clockwise. With mounting screw friction tight, rotate eccentric post to meet the requirements. Tighten screw.

Final minimum engagement: 1/2 of surface with second ratchet tooth at first point of contact.

3.16 Manual and Power Drive Backspace Mechanism (continued)

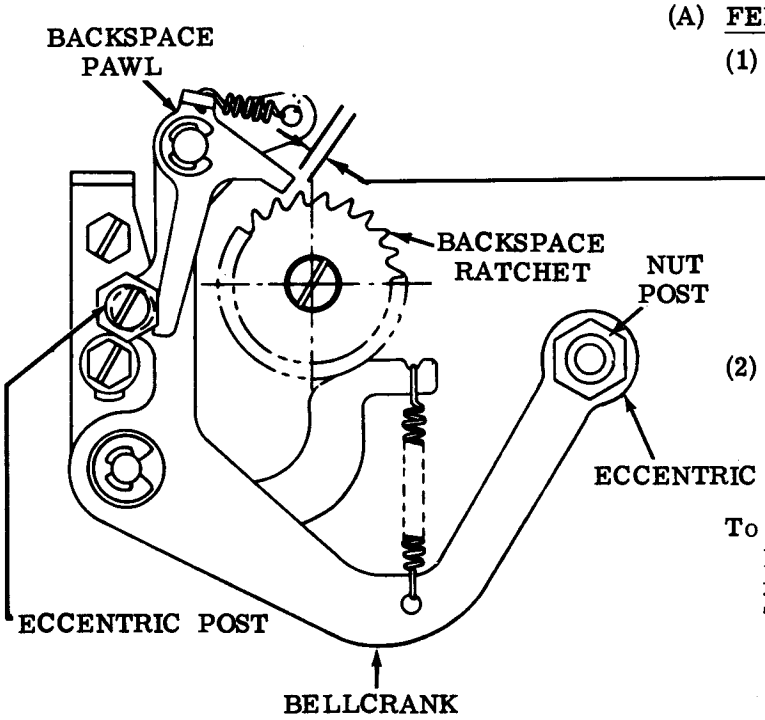

(A) FEED PAWL ECCENTRIC (Preliminary)

(1) Requirement (Manual Backspace)
With the backspace bellcrank assembly in its operated position and the feed wheel detented back one space.
Min some---Max 0.003 inch clearance between the backspace ratchet tooth and the backspace feed pawl with all the rotational play of the backspace ratchet taken up in a direction to make the clearance maximum.

(2) Requirement (Power Drive Backspace)
With the backspace bellcrank assembly in its operated position, the high side of the eccentric should be in its uppermost position.

To Adjust
Loosen the nut post (friction tight) and rotate the eccentric with an allen wrench. Tighten the nut post.

(B) ARMATURE HINGE (Early Design)

Requirement
With armature bail spring removed, armature held against the pole face, take up play at hinge in a downward direction. Clearance between the armature and magnet bracket.
Min some---Max 0.004 inch

To Adjust
With hinge mounting screws friction tight, position hinge. Armature should touch front and rear of pole face. Tighten screws and recheck adjustment.

Note: For dc operation, the armature should be positioned so that the side marked "C" faces pole face of magnet core. For ac operation, unmarked side faces pole.

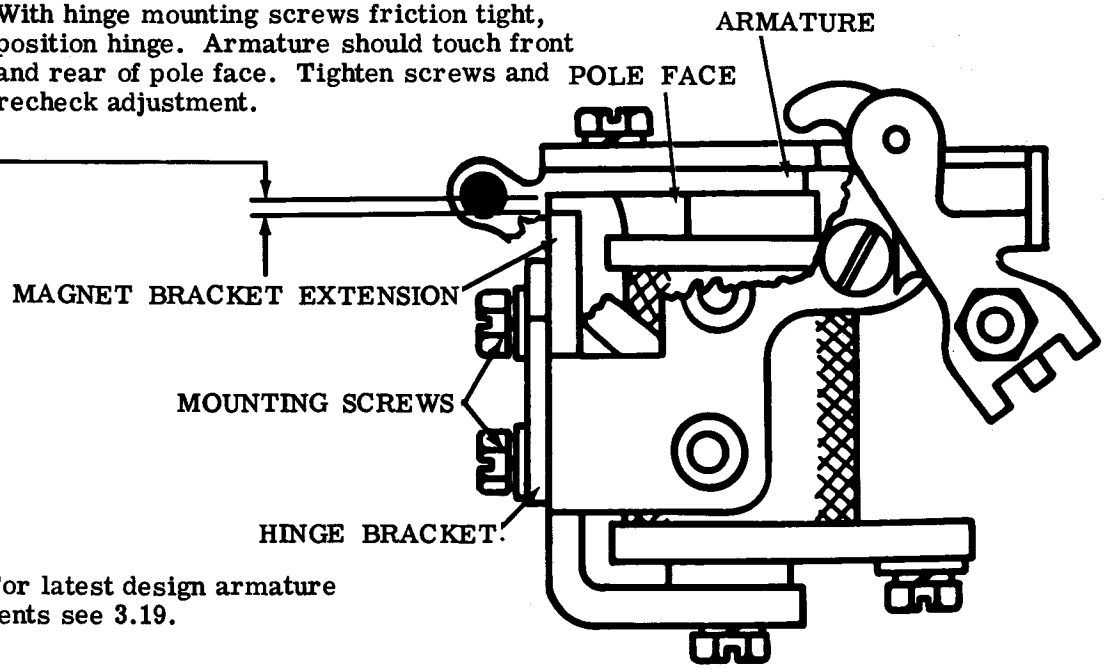

Note: For latest design armature adjustments see 3.19.

3.17 Power Drive Backspace Mechanism

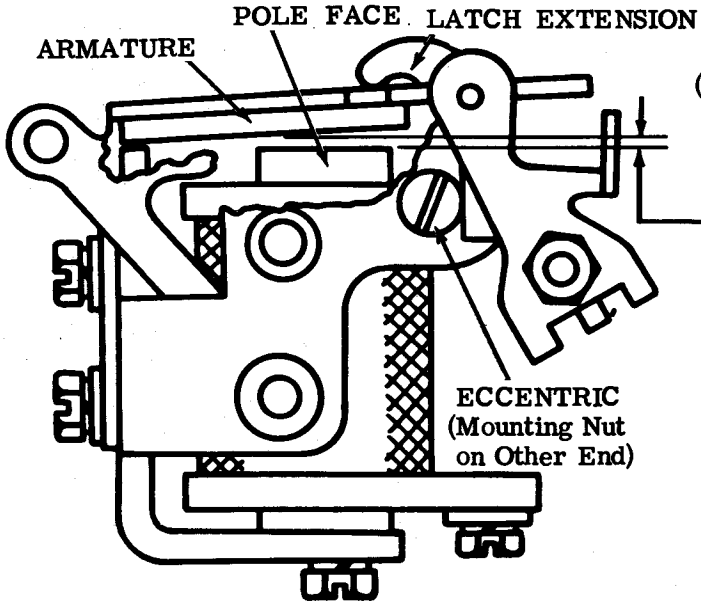

(A) ARMATURE UPSTOP (Early Design)

Requirement

Armature in unoperated position. Gap between armature and pole face Min 0.025 inch---Max 0.030 inch at closest point.

To Adjust

Rotate eccentric with mounting nut loosened. Keep high part of eccentric to left. Tighten nut.

(B) DRIVE LINK (Early Design)

Requirement

With high part of eccentric arm in left-hand position, armature against pole face to allow drive arm latchlever to rest against eccentric link

Min 0.040 inch---Max 0.045 inch clearance between step on eccentric arm and latchlever with play taken up to make gap a maximum.

To Adjust

With drive arm screw friction tight, position adjusting link. Tighten screw.

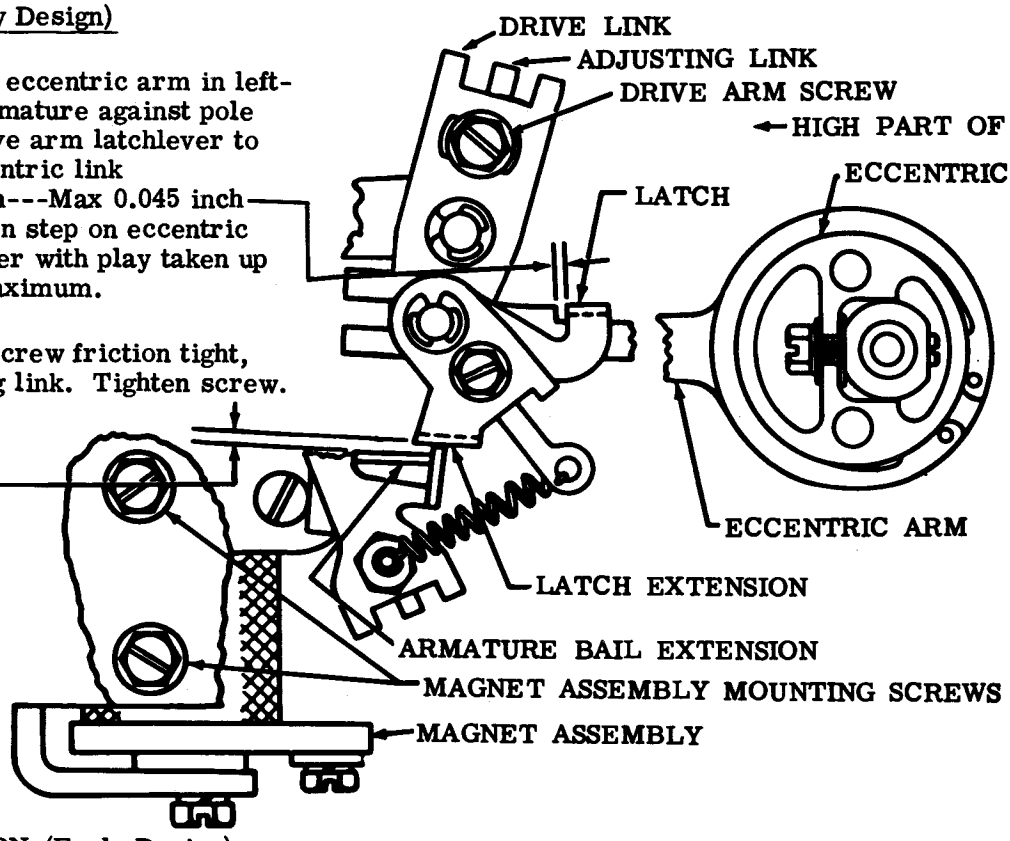

(C) LATCH EXTENSION (Early Design)

Requirement

With backspace mechanism in unoperated position, eccentric high part at the left, armature against the pole face, latch resting on the eccentric arm notch, clearance between top of armature extension and latch extension

Min 0.005 inch---Max 0.020 inch

To Adjust

With magnet mounting screws friction tight, swing magnet left or right. Tighten screws.

3.18 Power Drive Backspace Mechanism (continued)

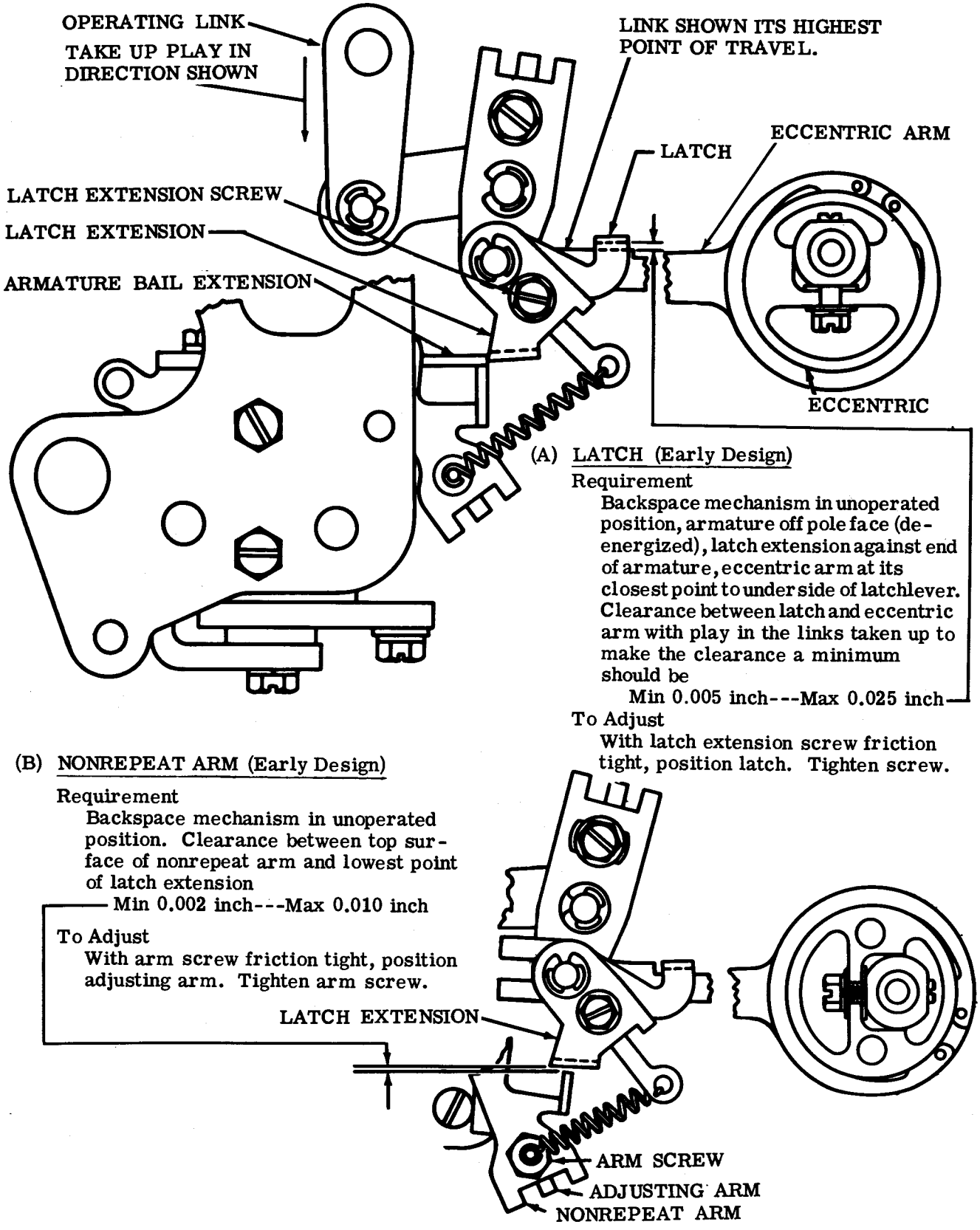

3.19 Power Drive Backspace Mechanism (continued)
(Nonadjustable Backspace Magnet Assembly)

Note 1: For early design adjustable magnet assembly see 3.16.

(A) ARMATURE SPRING (Latest Design)

Requirement
Min 15 oz---Max 20 oz to pull spring to installed length.

(B) LATCH EXTENSION SPRING (Latest Design)

Requirement
Min 1 oz---Max 2-1/4 oz to start latch moving.

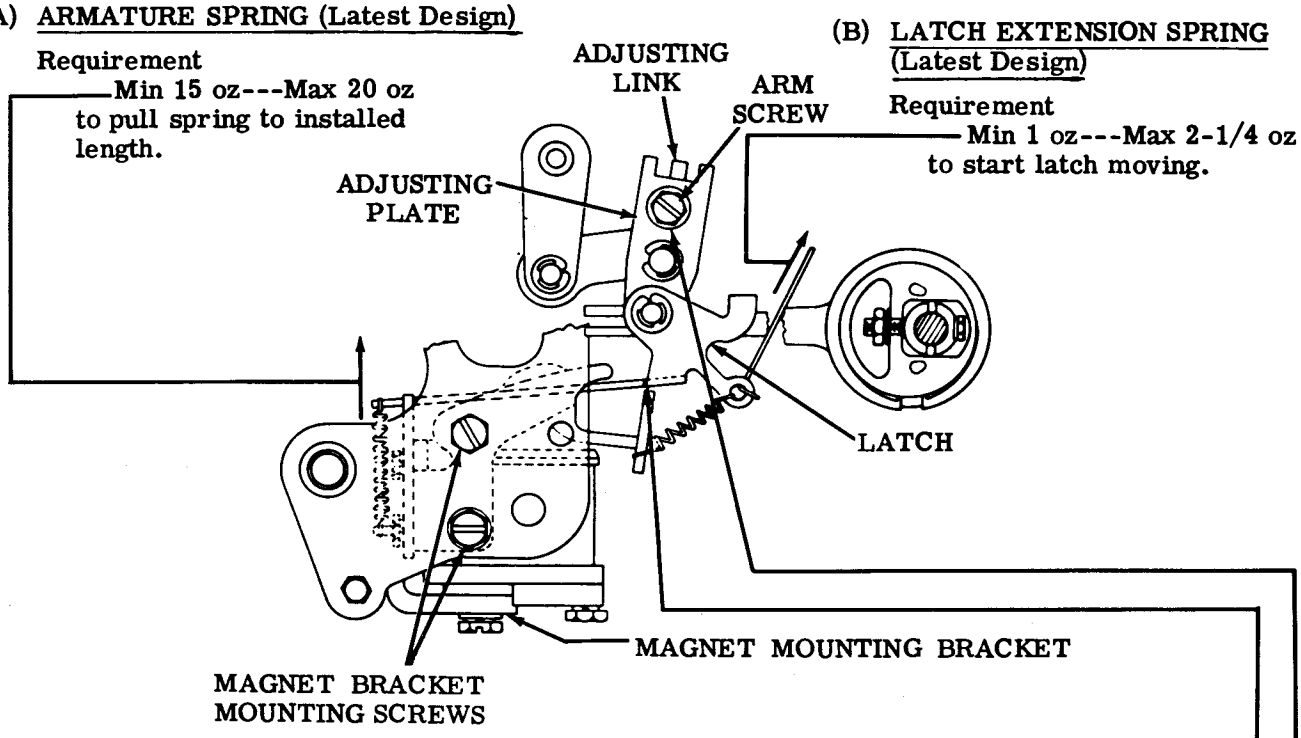

(C) MAGNET POSITION (Latest Design)

Requirement
The armature extension should engage the latch by approximately its full thickness when the magnet is de-energized.

To Adjust
Position the magnet assembly by means of its mounting screws. Tighten screws.

Note 2: The final adjustment requirement for all backspace mechanisms, manual or power drive, regardless of the type of unit will read as follows:

(D) FINAL MANUAL OR POWER ADJUSTMENT (Latest Design)

(1) Requirement
With tape in the unit, place the feed wheel shaft oil hole in its uppermost position, operate the backspace mechanism once. The ratchet wheel should be backed one space into a fully detented position.

Note 3: A fully detented position is defined as: With the detent roller in contact with the ratchet wheel the punch unit feed pawl should engage the first tooth below the horizontal centerline of the feed wheel ratchet with no perceptible clearance.

(2) Requirement
With the unit operating under power, perforate approximately two inches of tape with the RUBOUT combination selected. Backspace twelve characters in succession with the unit still under power. Again perforate approximately two inches of tape with the RUBOUT combination selected. Clipping of the code holes should be held to a minimum and should not exceed more than 0.005 inch, as gauged by eye.

To Adjust
On manual operated backspace mechanisms refine the FEED PAWL ECCENTRIC (Preliminary) (3.16) adjustment. On backspace mechanisms equipped with power drive, loosen the arm adjusting screw and position the adjusting plate. Tighten the arm adjusting screw.

3.20 Power Drive Backspace Mechanism (continued)

(A) FEED PAWL SPRING

Requirement
Backspace mechanism in unoperated position.
Min 4 oz---Max 6 oz
to start feed pawl moving.

Note: All spring tensions should be taken with the mechanism in unoperated position.

(B) BELLCRANK SPRING

Requirement
Min 9 oz---Max 12 oz
to pull spring to installed length.

(C) ARMATURE LATCH SPRING (Early Design)

Requirement
Min 1 oz---Max 2-1/4 oz
to pull armature latch spring
to installed length.

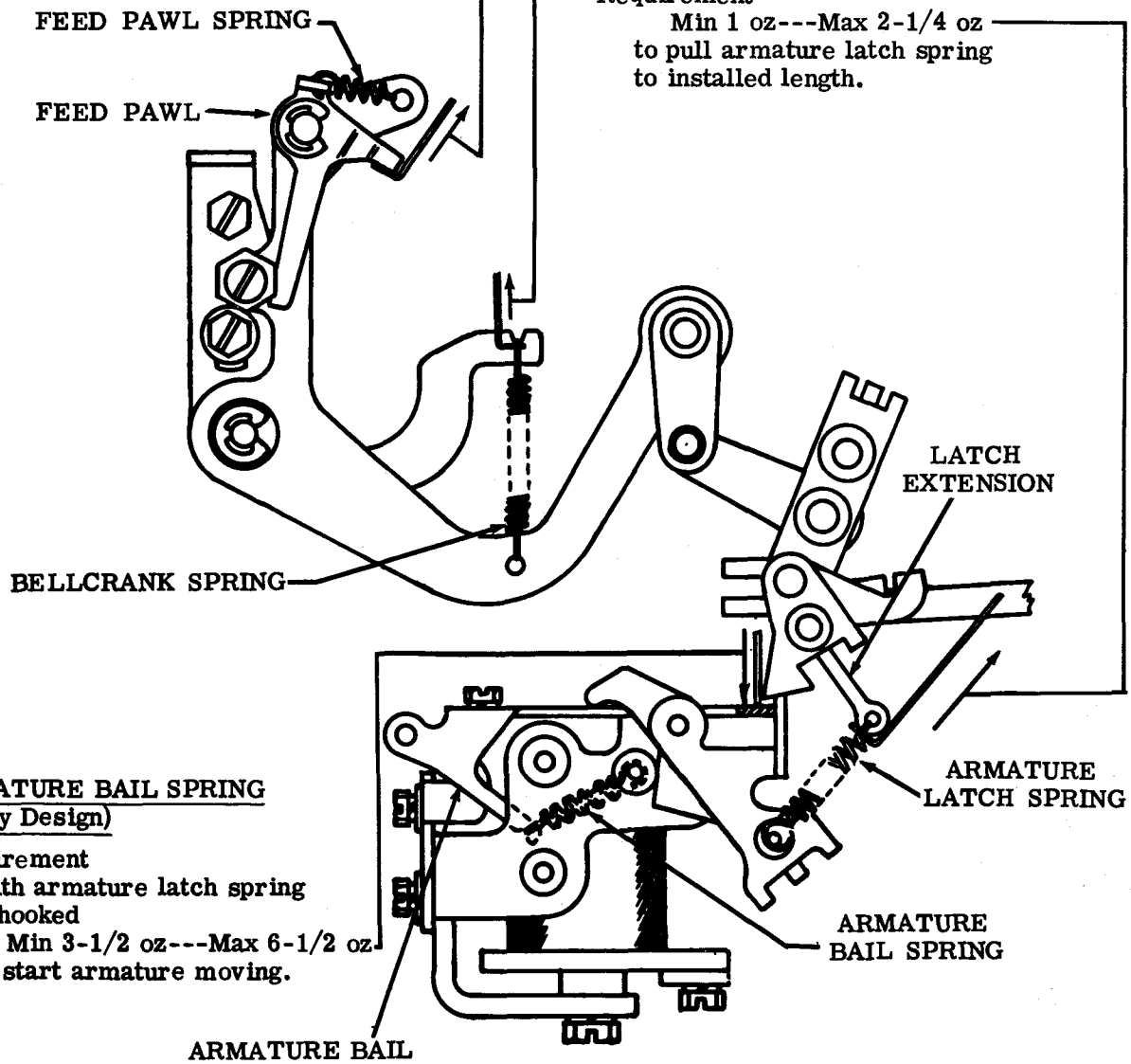

(D) ARMATURE BAIL SPRING (Early Design)

Requirement
With armature latch spring unhooked
Min 3-1/2 oz---Max 6-1/2 oz
to start armature moving.

3.21 Print Suppression Mechanism

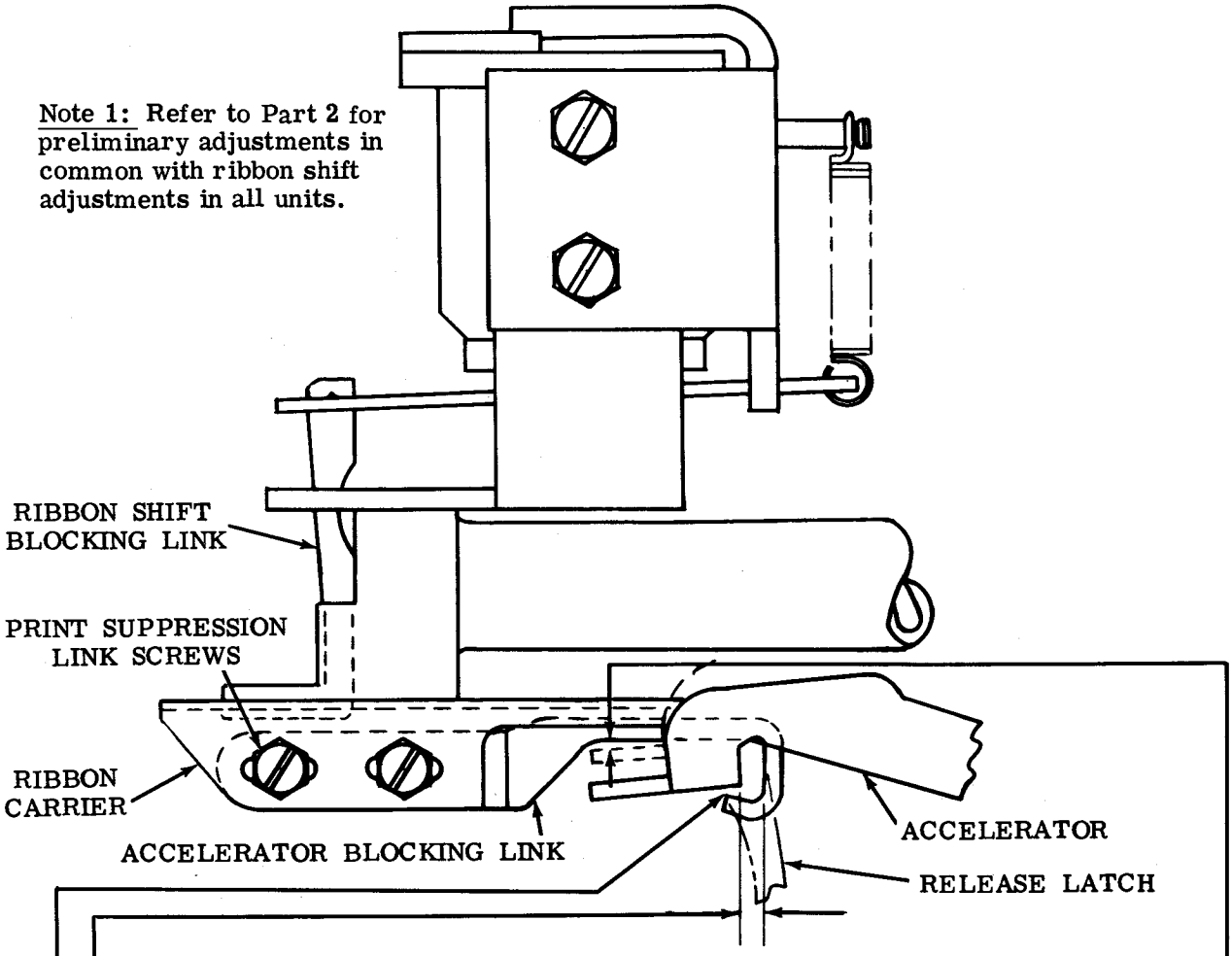

ACCELERATOR BLOCKING LINK (Latest Design)

(1) Requirement
With the rocker bail in the extreme left position, there should be
Min 0.075 inch---Max 0.095 inch
clearance between the accelerator lever and the accelerator blocking link.

(2) Requirement
With the unit in the stop position, there should be
Min some
clearance between the top surface of the accelerator and the blocking link.

(3) Requirement
With the ribbon shift magnet armature resting against its upstop screw and when the mainshaft is rotated through a complete revolution, there should be
Min some
clearance between the accelerator and blocking link at its closest point.

To Adjust
Loosen the two screws which mount the accelerator blocking link and position the link both horizontally and vertically to meet the requirements. Tighten screws.

3.22 Print Suppression Mechanism (continued)

Note 1: Refer to Part 2 for preliminary adjustments in common with ribbon shift adjustments in all units.

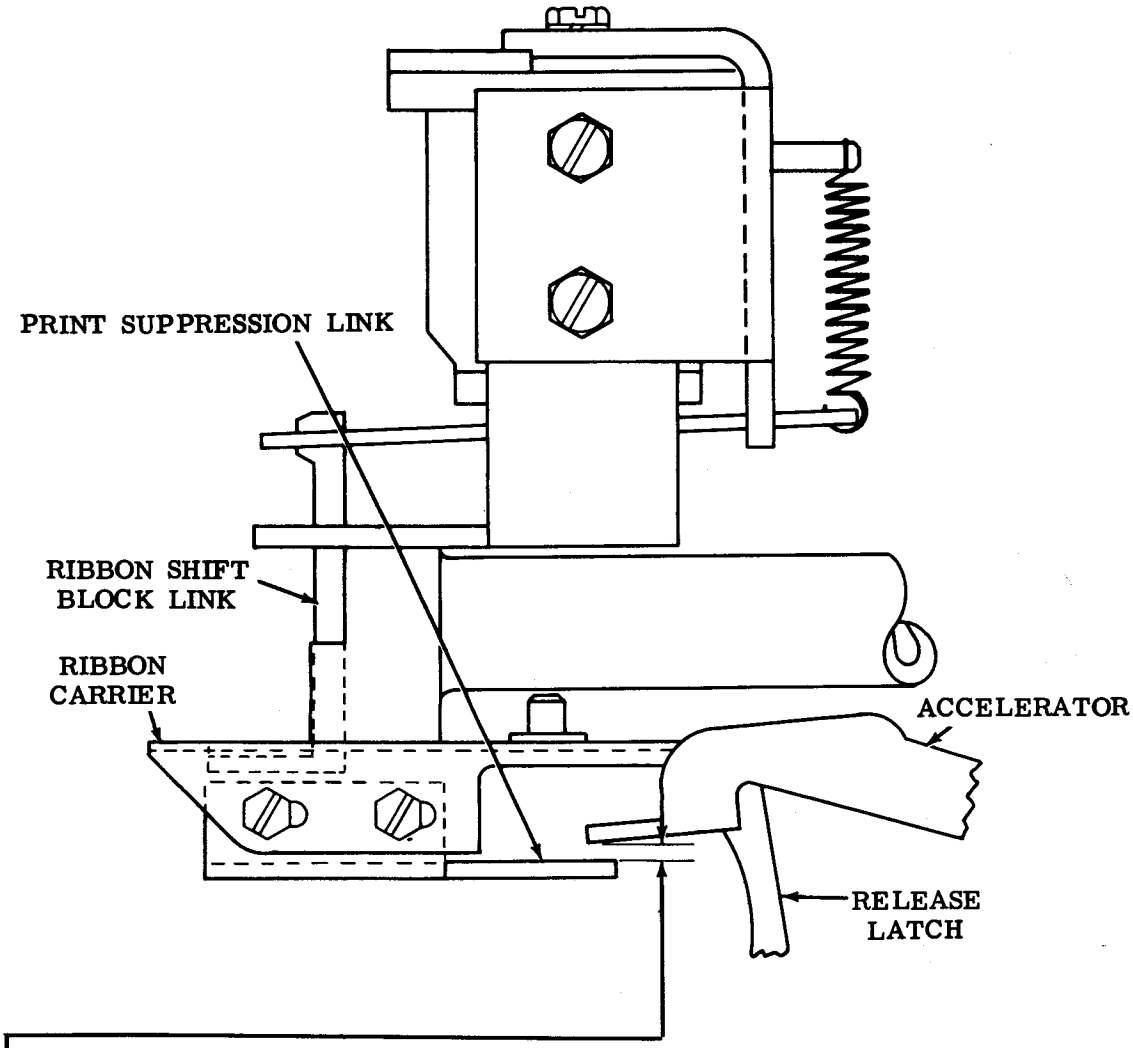

Note 2: The following adjustment pertains to units that block the ribbon carrier when the shift magnet armature is held attracted.

ACCELERATOR BLOCKING LINK (Early Design)

Requirement

Function clutch tripped and mainshaft rotated until print hammer trip lever just touches print release latch. There should be

Min 0.020 inch---Max 0.030 inch

clearance between the upper surface of the print suppression link and the lower surface of the print hammer accelerator.

To Adjust

Position the print suppression link all the way to the rear of the slots on the ribbon carrier. Position link in vertical direction with mounting screws loosened to meet requirement. Tighten screws.

3.23 Print Suppression Mechanism (continued)

CONTROL LEVER (Manual)

(1) Requirement
There should be a clearance of
Min 0.015 inch
between the print suppress lever and the print hammer when the lever extension is in the print position (down).

(2) Requirement
When the lever extension is in the nonprint position (up), the blocking extension should extend across the full thickness of the print hammer with a clearance of
Min 0.015 inch
at the side of the print hammer.

To Adjust
Loosen the eccentric bushing mounting nut and position the bushing until the requirements are met. The high part of the eccentric should be down and to the right as viewed from the rear of the unit. Tighten nut.

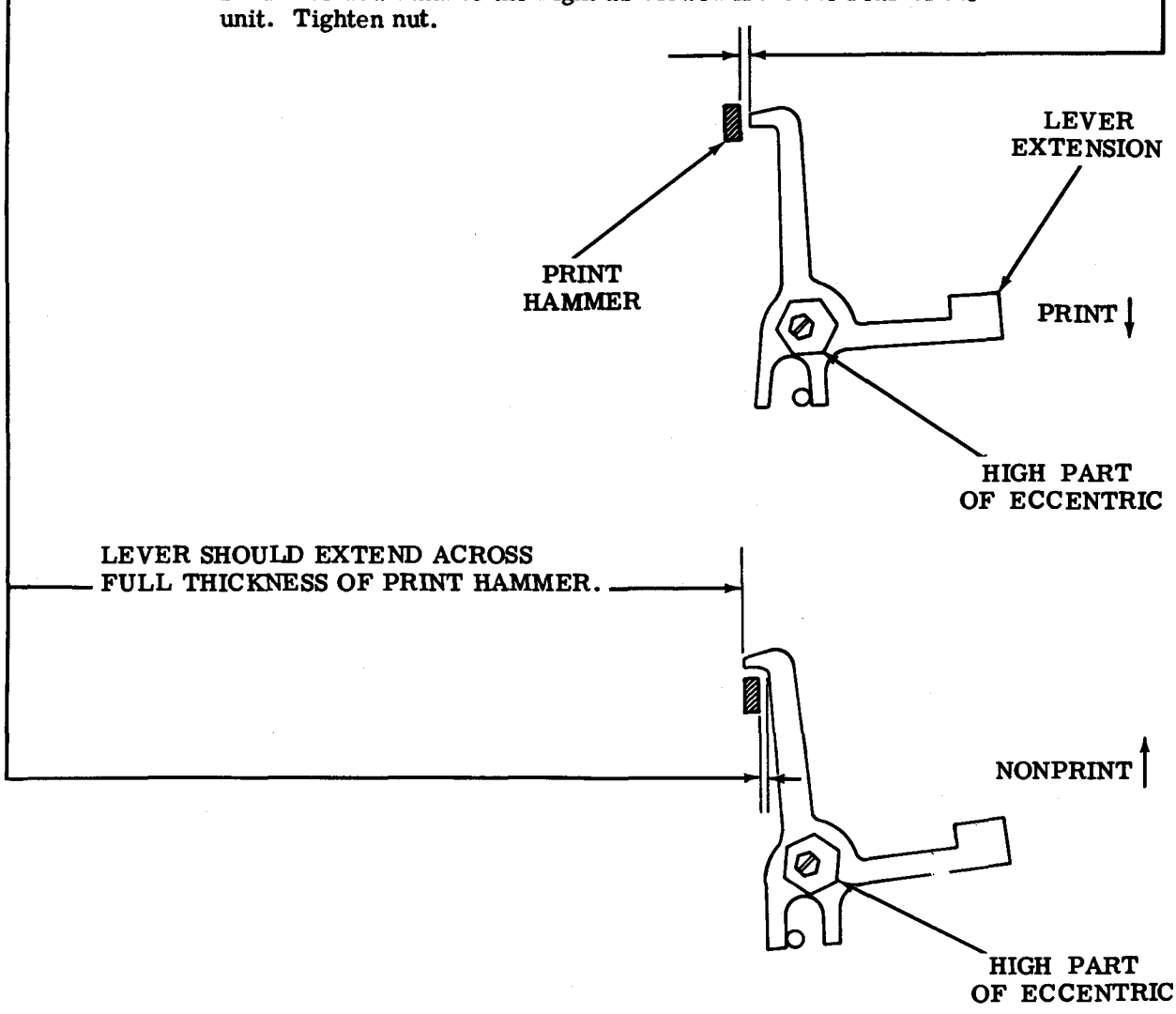

3.24 Signal Bell and EOT Contacts

Note 1: The following adjustments should be made prior to installing the contact bracket assembly on unit.

(A) NORMALLY OPEN CONTACT GAP

Requirement
Min 0.008 inch---Max 0.015 inch

To Adjust
Bend normally open contact spring.

(B) NORMALLY CLOSED CONTACT

Requirement
Min 8 grams---Max 15 grams to move the swinger contact away from the normally closed contact.

To Adjust
Bend normally closed contact spring.

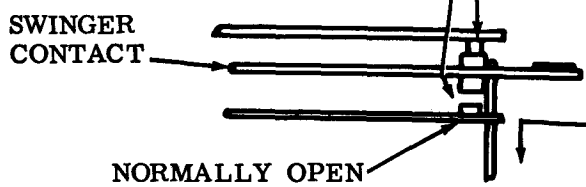

Note 2: The following adjustments should be made after the contact bracket assembly is mounted to the unit.

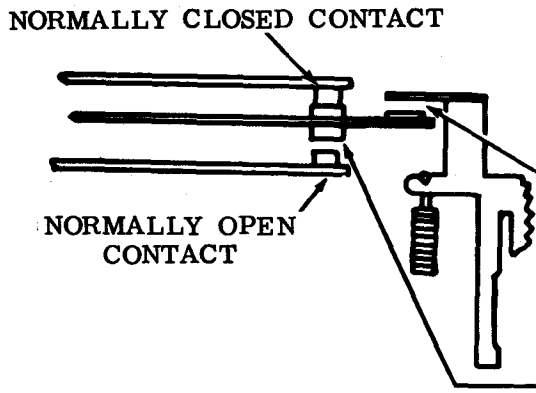

(C) NORMALLY OPEN CONTACT GAP

(1) Requirement
With the function blade in its lowest position in the nonselected condition, clearance between the contact swinger insulator button and the function blade
Min some

(2) Requirement
Contact gap
Min 0.008 inch---Max 0.015 inch

To Adjust
Bend normally closed contact spring.

(3) Requirement
With the function blade in its lowest position in the selected condition, gap between the swinger contact and normally closed (now open) contact
Min 0.015 inch
and some overtravel of the normally open contact.

To Adjust
Bend normally closed contact spring. Refine previous adjustments to maintain requirements.

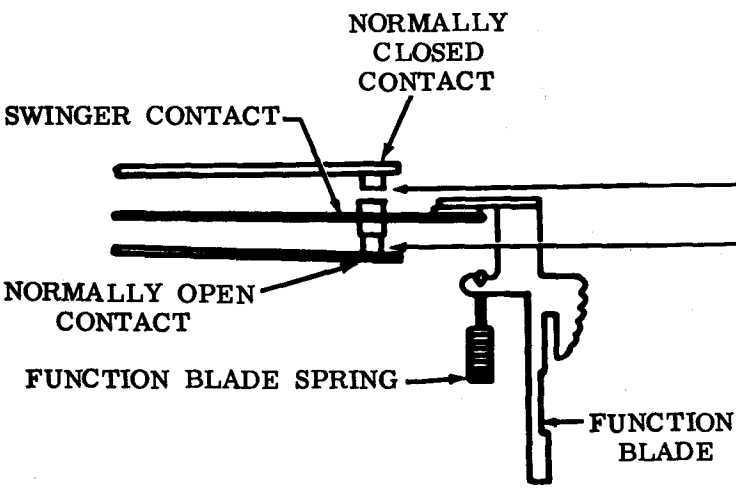

28 AND 35 ANSWER-BACK UNIT

ADJUSTMENTS

CONTENTS PAGE

1. GENERAL

1.01 This section is reissued to add coverage of the 5- and 8-level answer-back unit. Since this revision is of a general nature, marginal arrows have been omitted.

1.02 The adjustments in this section are arranged in a sequence that should be followed if a complete readjustment is undertaken. A complete adjusting procedure should be read before attempting to make the adjustment. After an adjustment is made, be sure to tighten any nuts or screws that may have been loosened, unless otherwise instructed.

1.03 The adjustment illustrations indicate tolerances, positions of moving parts, spring tensions, and the angle at which scales should be applied. The tools required to make adjustments and check spring tensions are not supplied with the equipment, but are listed in the appropriate section under separate cover. Springs which do not meet the requirements, and for which there are no adjusting procedures, should be discarded and replaced by new springs.

1.04 Where adjustment instructions call for removal of components, assemblies, subassemblies, or parts, all adjustments which the removal of these parts might facilitate should be made before the parts are replaced, or as the equipment is reassembled. When a part mounted on shims is removed, the number and location of shims should be noted so that the identical pile-up can be made when the part is replaced.

1.05 All electrical contact points should meet squarely. Contacts with the same diameter should not be out of alignment more than 25 per cent of the contact diameter. Check contacts for pitting and corrosion and clean or burnish them before making the specified adjustment or tolerance measurement. Avoid sharp kinks or bends in the contact springs.

Note: Keep all electrical contacts free of oil and grease.

1.06 References made to left or right, up or down, and front or rear apply to the answer-back unit as viewed from the side with

the answer-back mechanism to the left and the motor to the right.

1.07 Unless otherwise specified, where the stop position of the answer-back mechanism is referred to, the lugs of both the clutch release lever and shaft stop lever should be against the armature, with the armature extension resting in the stop indent of the code drum stop cam.

1.08 Instructions for coding the answer-back drum are not included in this section. Refer to the appropriate section covering installation of the answer-back unit for detailed coding instructions.

2. BASIC UNITS

2.01 Trip Mechanism

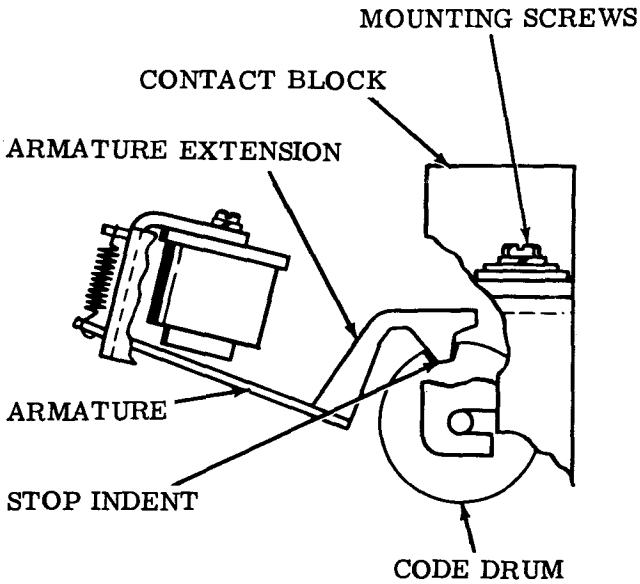

CONTACT BLOCK POSITION (PRELIMINARY)

Requirement
Answer back in stop position, armature extension must drop into stop indent in code drum stop cam.

To Adjust
Step code drum to last character. Rotate main shaft further until the motor hold cam allows armature to drop. Position the contact block until armature extension drops into indent with the contact block mounting screws loosened.

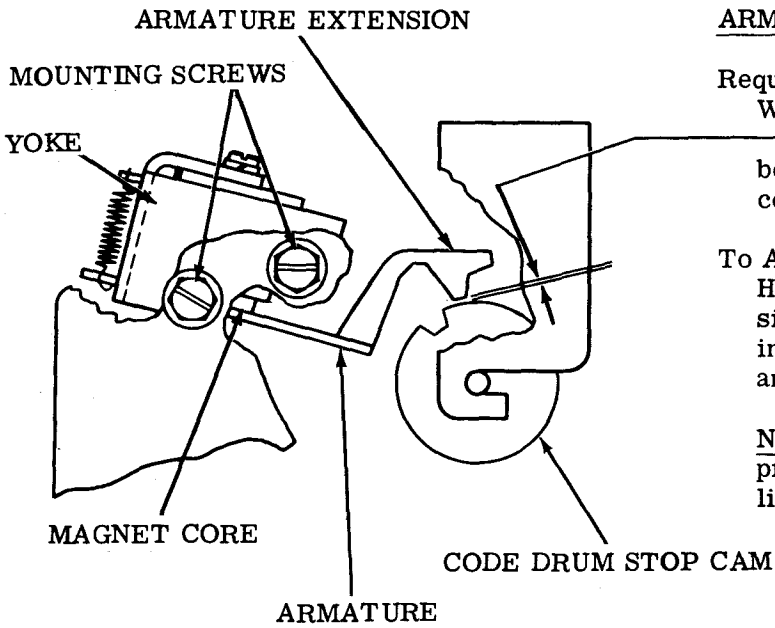

ARMATURE EXTENSION GAP

Requirement
With armature held against magnet core Min some---Max 0.015 inch between armature extension and high part of code drum stop cam.

To Adjust
Hold armature against magnet core and position magnet yoke assembly with its mounting screws friction tight. Recheck clearance after tightening screws.

Note: When holding armature against core, press between pivot and core to prevent lifting armature.

2.02 Trip Mechanism (continued)

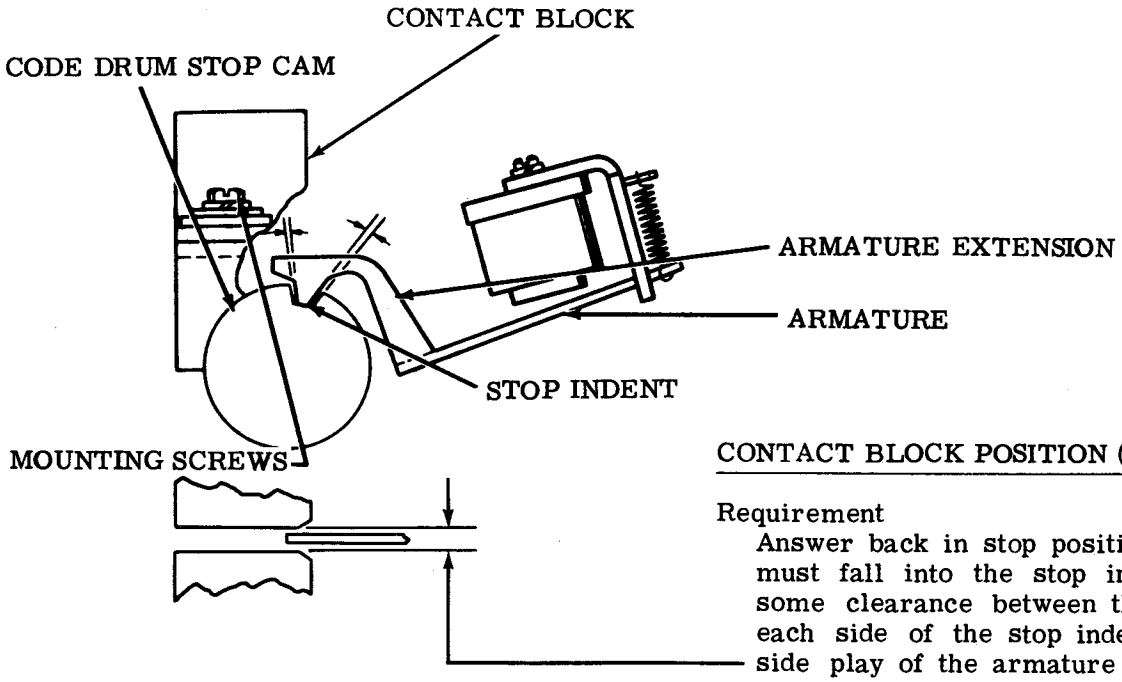

CONTACT BLOCK POSITION (FINAL)

Requirement

Answer back in stop position, the armature must fall into the stop indent freely with some clearance between the extension and each side of the stop indent. The side to side play of the armature must be limited by the width of the groove in the contact block rather than the edges of the yoke.

To Adjust

Position the contact block with its mounting screws loosened.

Note: Keep back of block approximately parallel and in line with back of frame.

CLUTCH TRIP MAGNET ARMATURE SPRING

Requirement

Min 7 oz---Max 9 oz
to start heel end of armature moving.

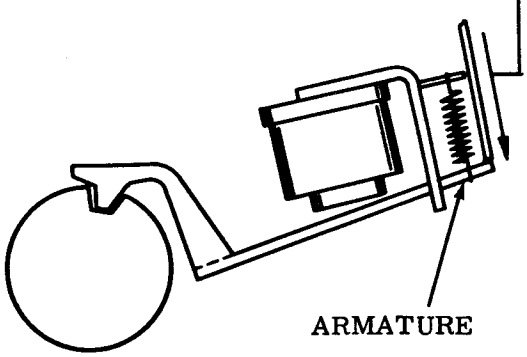

2.03 Feed Mechanism

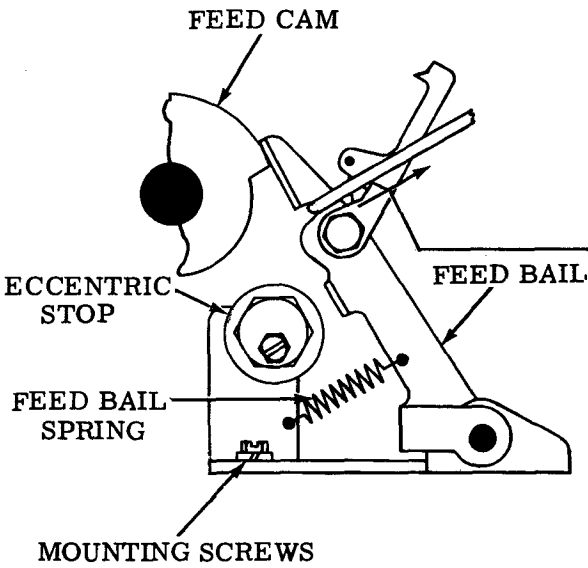

FEED BAIL SPRING

Requirement

With code drum removed and feed bail on high part of its cam to start bail moving. — Min 15 oz---Max 17 oz

To Adjust

With bracket mounting screws friction tight, position bracket to increase or decrease tension. Tighten screws.

Note: When new code drum is installed, refine spring tension toward 17 ozs.

FEED PAWL

Requirement

Answer back in stop position, clearance between feed pawl engaging surface and tooth on code drum. — Min 0.005 inch---Max 0.015 inch

To Adjust

Position feed pawl with its mounting nut loosened. Tighten nut and recheck.

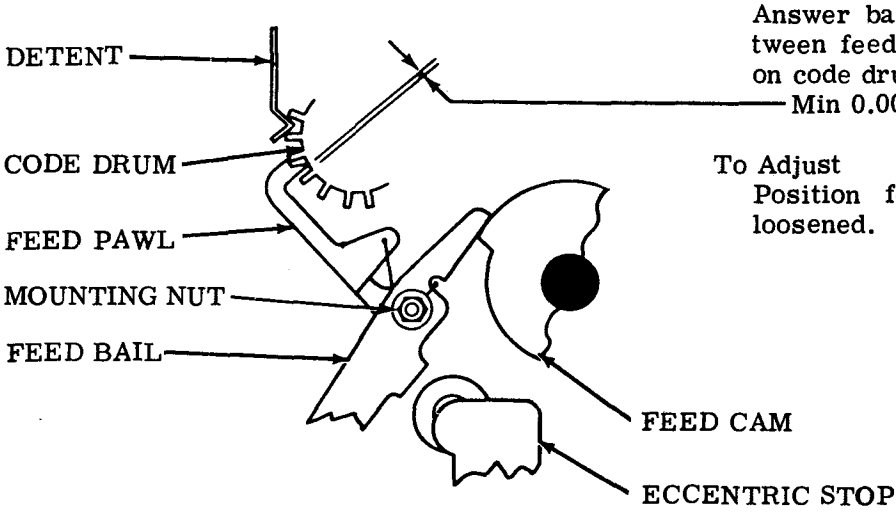

2.04 Feed Mechanism (continued)

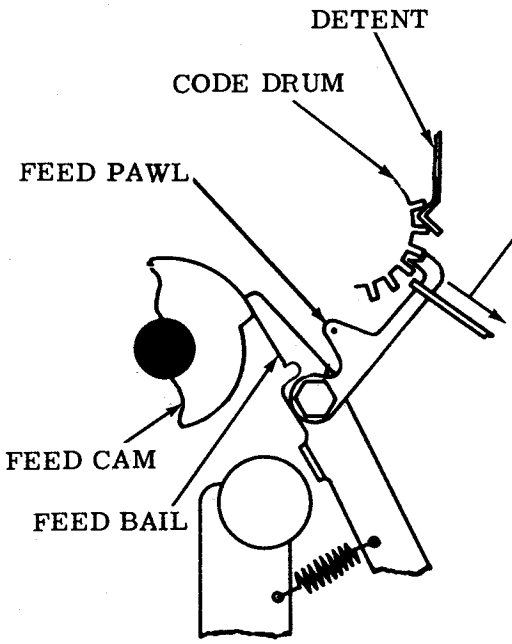

FEED PAWL SPRING

Requirement
With answer back in stop position and code drum in place
Min 1/2 oz---Max 1-1/2 oz
to start pawl moving.

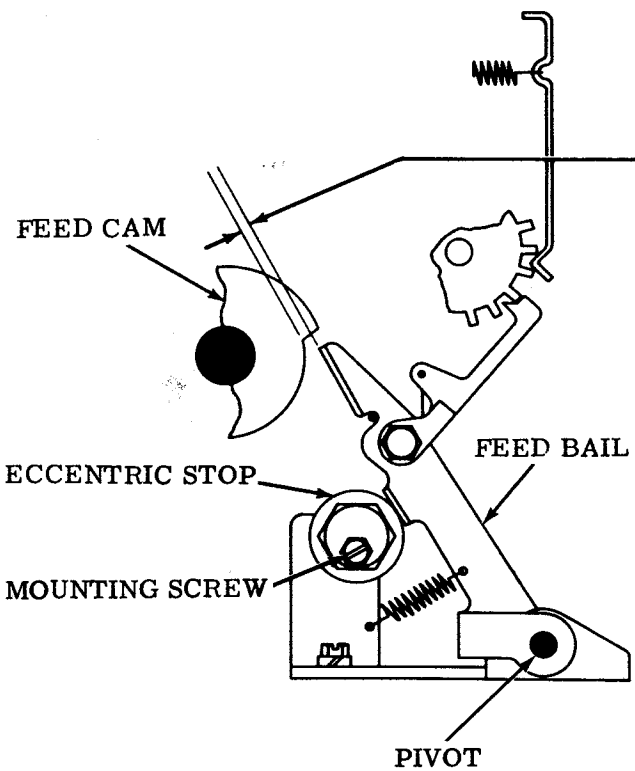

ECCENTRIC STOP POSITION

Requirement
With feed bail in lowest position of its travel opposite low part of its cam resting on eccentric stop, clearance between feed cam and feed bail.
Min 0.055 inch---Max 0.075 inch

To Adjust
Rotate eccentric with its mounting screw loosened.

Note: Keep high part of eccentric away from pivot point of feed bail to insure that eccentric stop bears against flat surface of bail extension and not on its lower edge.

2.05 Feed Mechanism (continued)

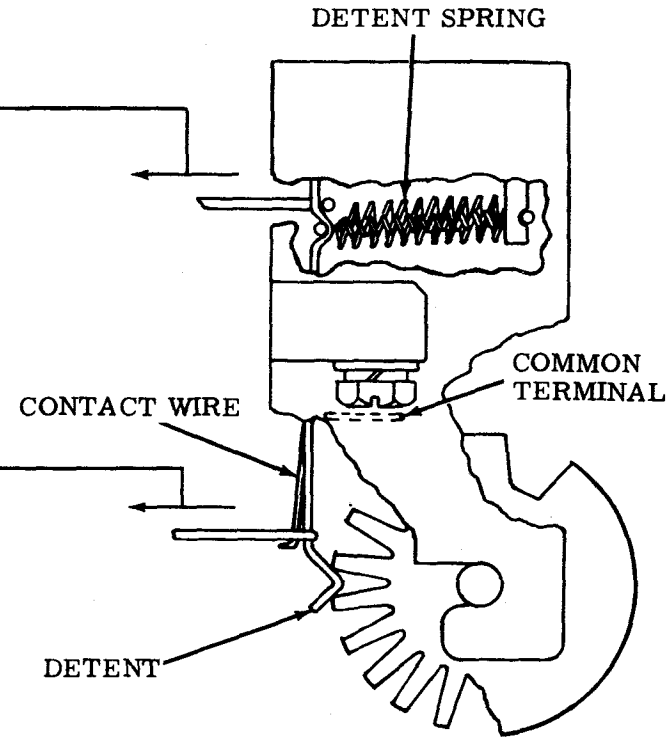

CODE DRUM CONTACT WIRE SPRING

Requirement
Min 1 oz.---Max 2 oz
to start contact wire moving away from common terminal.

CODE DRUM DETENT SPRING

Requirement
Min 9 oz---Max 11 oz
to start detent moving.

2.06 Relay Brackets and Contacts

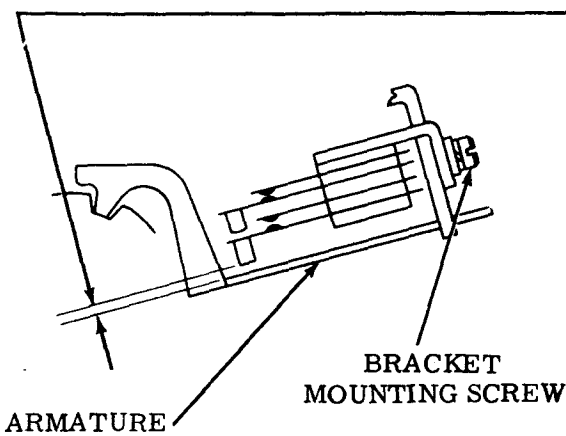

MOTOR HOLD AND RELAY PULL-UP CONTACT BRACKET

Requirement
Trip magnet armature released clearance between insulator on contact and armature
Min 0.015 inch---Max 0.030 inch

To Adjust
Position contact bracket with its mounting screw loosened.

Note: Keep bracket parallel with armature.

2.07 Relay Brackets and Contacts (continued)

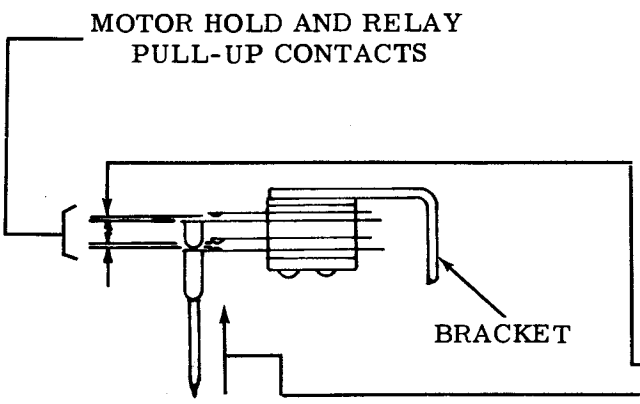

MOTOR HOLD AND RELAY PULL-UP CONTACT

Note: The adjustments are made before installation into the unit and should be checked or remade only in case of malfunction attributed to maladjustment of the contacts. If it should become necessary to remake the adjustment, the following procedure should be followed. Remove contact assembly with bracket from magnet yoke.

Requirements

(1) The gap between the contacts in the unoperated position should be
Min 0.020 inch---Max 0.030 inch

(2) Min 25 grams---Max 50 grams
to close both contacts.

To Adjust

Bend contacts to meet requirements.

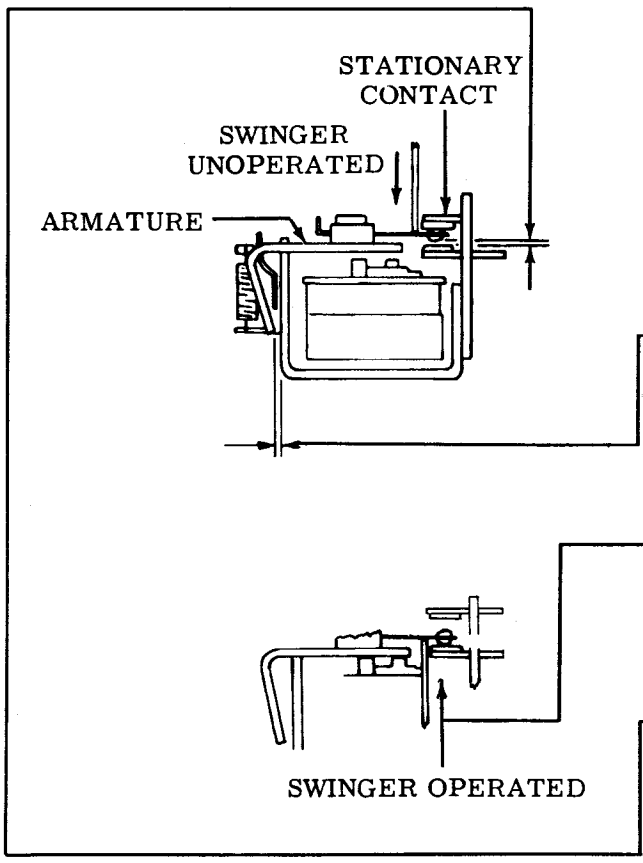

NONREPEAT RELAY

Note: These adjustments are made before installation into the unit and should be checked or remade only in case of malfunction attributed to maladjustment. If it should become necessary to remake the adjustment, the following procedure should be followed:

(1) Requirement
With armature released, clearance between armature stops and frame
Min 0.015 inch---Max 0.025 inch

(2) Requirement
The "make" contact (double) should close a minimum of 0.003 inch before the "break" (single) contact opens.

(3) Requirement
Minimum of 15 grams to move the swinger away from the stationary contacts when the armature is in either the operated or unoperated position.

(4) Requirement
The minimum contact gap should be 0.012 inch.

To Adjust

Bend armature stops, stationary contacts, and contact springs to meet requirements.

2.08 Distributor Brushes

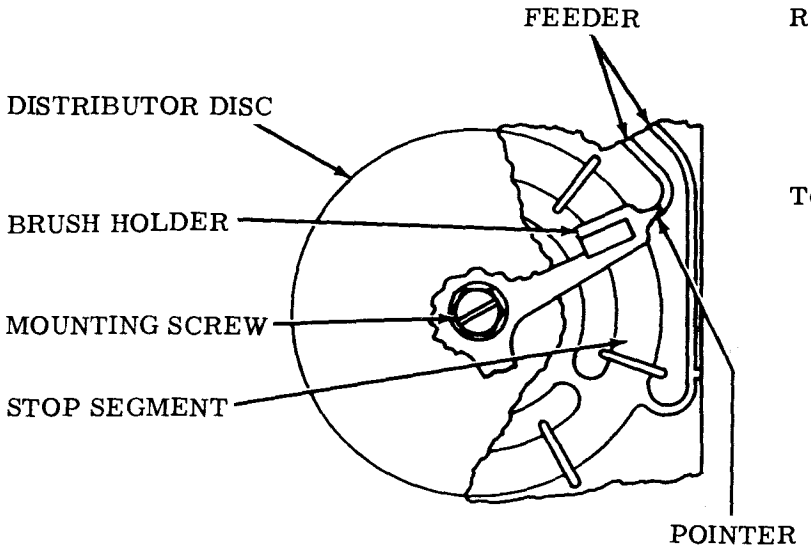

DISTRIBUTOR BRUSH HOLDER

Requirement

With answer back in stop position, the pointer on the brush holder should point to the feeder of the stop segment.

To Adjust

Turn brush holder clockwise with its mounting screw loosened.

CAUTION: DO NOT TURN BRUSH HOLDER COUNTERCLOCKWISE. DAMAGE TO BRUSHES MAY RESULT.

BRUSH HOLDER SPRING

Requirement

New brush

Min 10-1/2 oz---Max 13-1/2 oz

Brush worn to 1/4 in. length

Min 7-1/2 oz---Max 10-1/2 oz

to start outer brush spring moving.

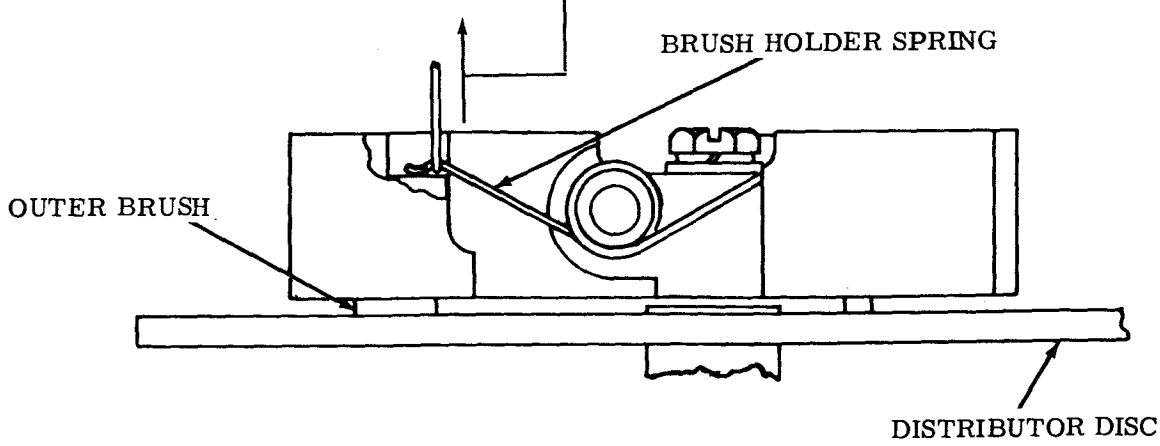

2.09 Gear Backlash

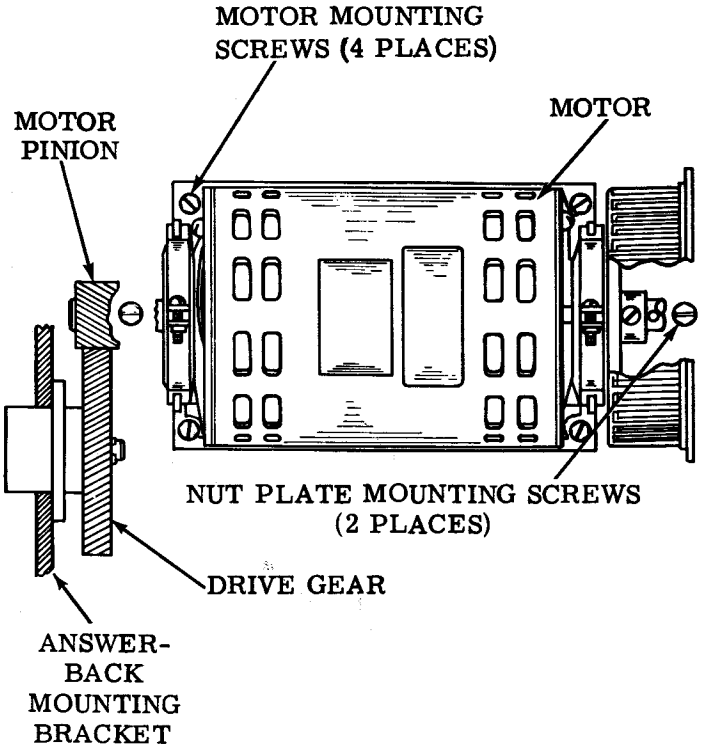

GEAR BACKLASH - SELF-CONTAINED UNIT

Requirements

(1) Backlash between motor pinion and drive gear should be
Min 0.004 inch---Max 0.008 inch

(2) Adjust for minimum noise.

To Adjust

With motor mounting and nut plate screws friction tight, position motor until requirements are met.

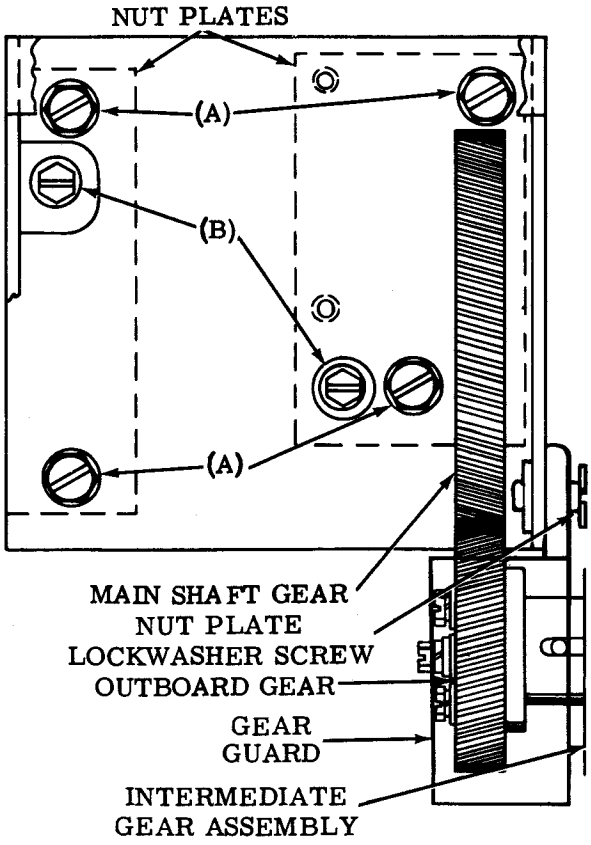

Note: The following adjustment is made after intermediate gear assembly to typing unit gear and motor pinion gear adjustments have been made.

GEAR BACKLASH - RO, KSR

Requirement

Backlash, at point of minimum clearance between answer-back main shaft gear and outboard gear of intermediate gear assembly on base
Min 0.004 inch---Max 0.008 inch
gauge by feel.

To Adjust

With two nut plate screws (B) friction tight, loosen four answer-back mounting screws (A). Move answer back all the way toward front in mounting holes. Tighten four answer-back mounting screws to friction tight and loosen two nut plate screws. Position assembly. Tighten all screws.

2.10 Gear Backlash (continued)

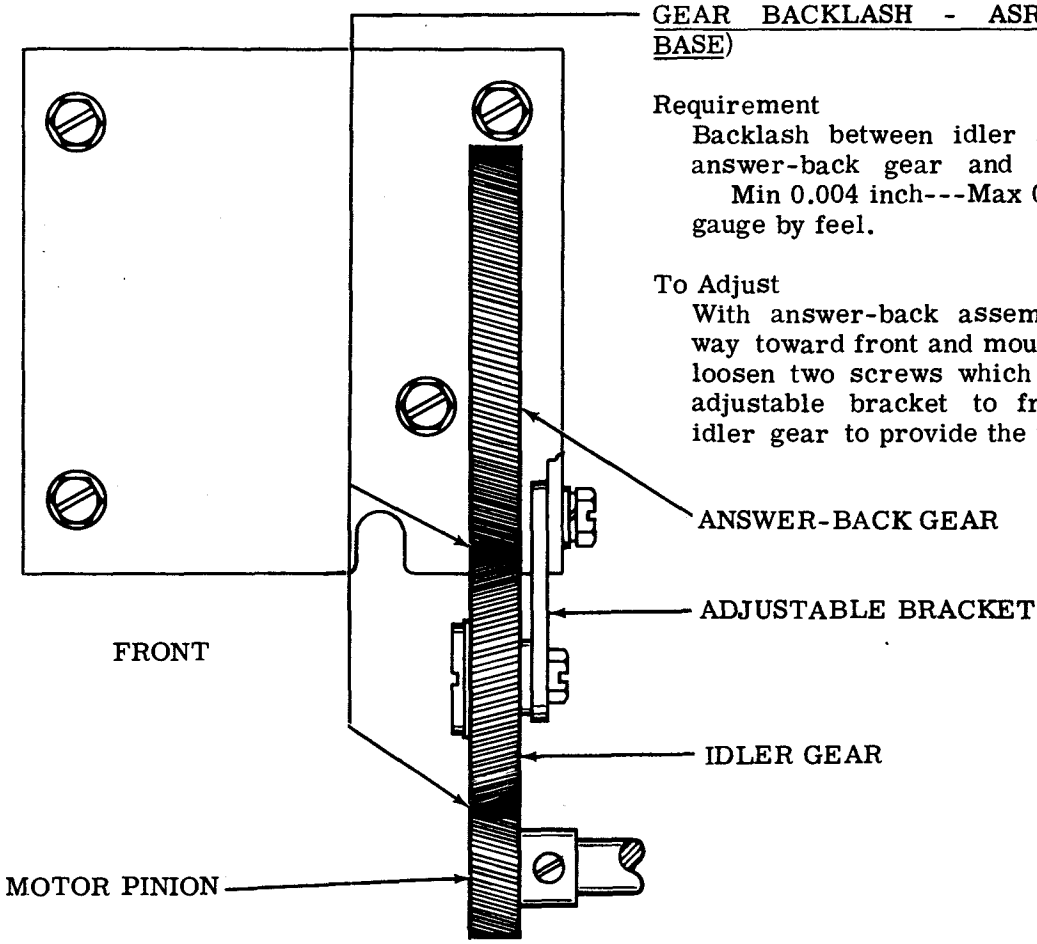

GEAR BACKLASH - ASR (TRANSMITTER BASE)

Requirement

Backlash between idler gear and both the answer-back gear and the motor pinion
Min 0.004 inch---Max 0.008 inch
gauge by feel.

To Adjust

With answer-back assembly moved all the way toward front and mounting screws tight, loosen two screws which secure idler gear adjustable bracket to frame and position idler gear to provide the required backlash.