RevNo	Revision note	Date	By	Checked
–	–	–	–	–

Notes –					
1	#	Exchange operands	4	–	Negate entry
2	I II III *	Recall (clears memory)			
3	▽	Recall only			

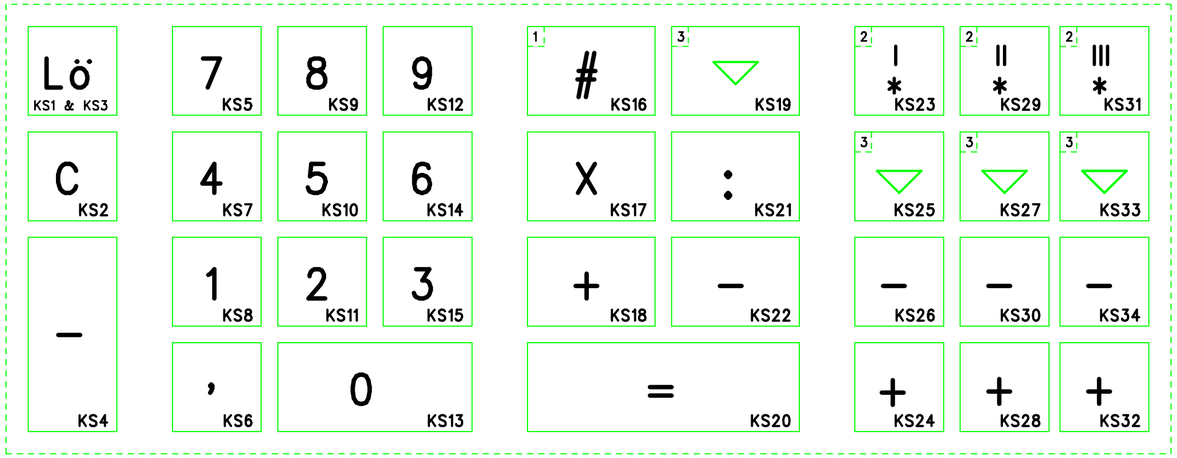

Keyboard Physical Layout

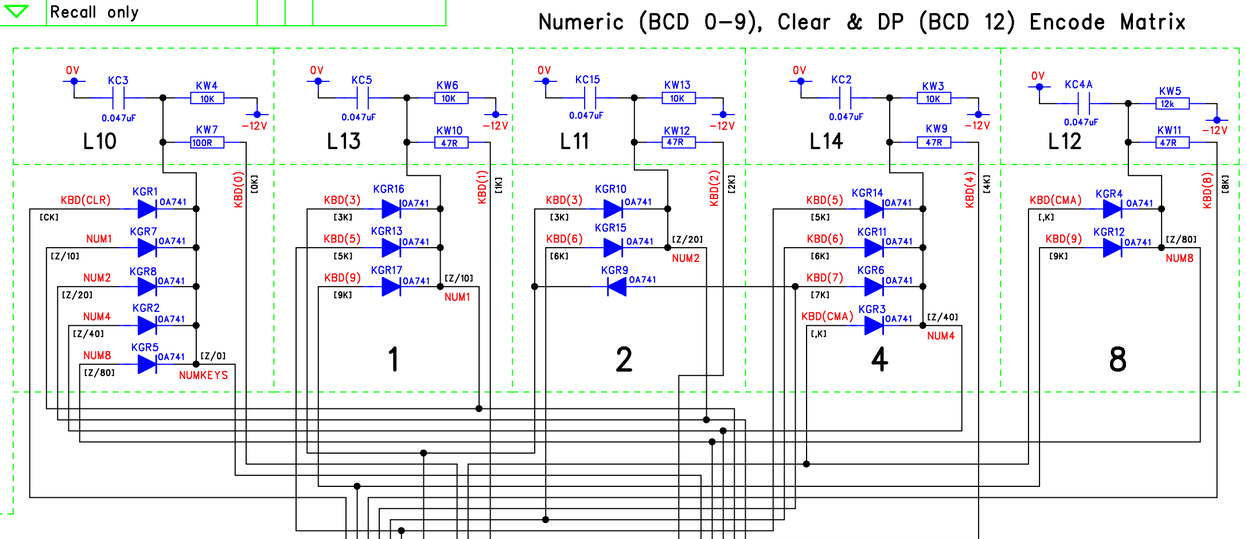

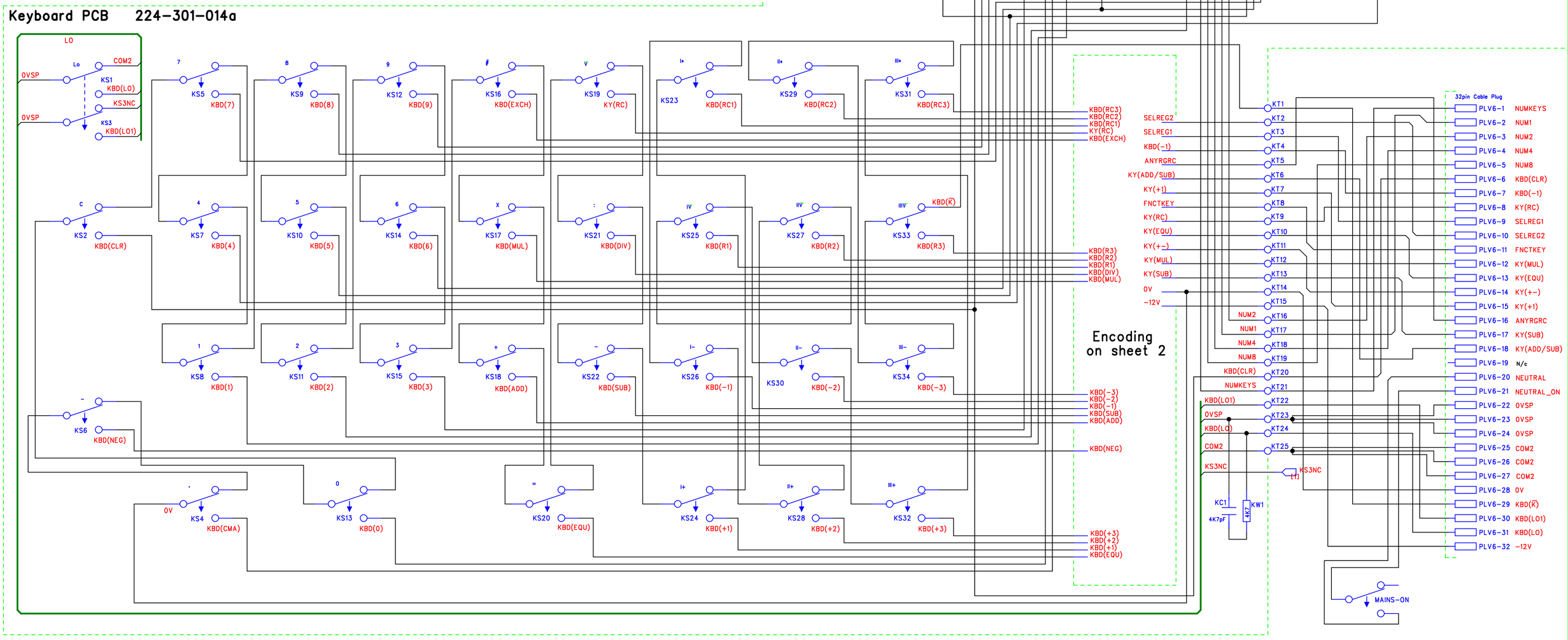

Keyboard & Digit Key Encoder

These diagrams are referenced to 0V – Logical 1 = –12V, logical 0 = 0V

© 2017 Mike Hatch. (www.soemtron.org)

DM Associates
33, Northbrook Road
Aldershot, Hampshire. GU11 3HE
Email: mike@soemtron.org
www.soemtron.org

Pcb Dwg # =			Scale	Nts
	Name	Date	Sheet	1
Drawn	MD Hatch	15/8/2017	Next Sheet	2
Checked	–	–	Drawing Number	Soemtron 222

Title: Soemtron ETR 222 Calculator [Keyboard Circuit & Layout] [PCB = 224–301–014a]

A2 Issue A

RevNo	Revision note	Date	By	Checked
–	–	–	–	–

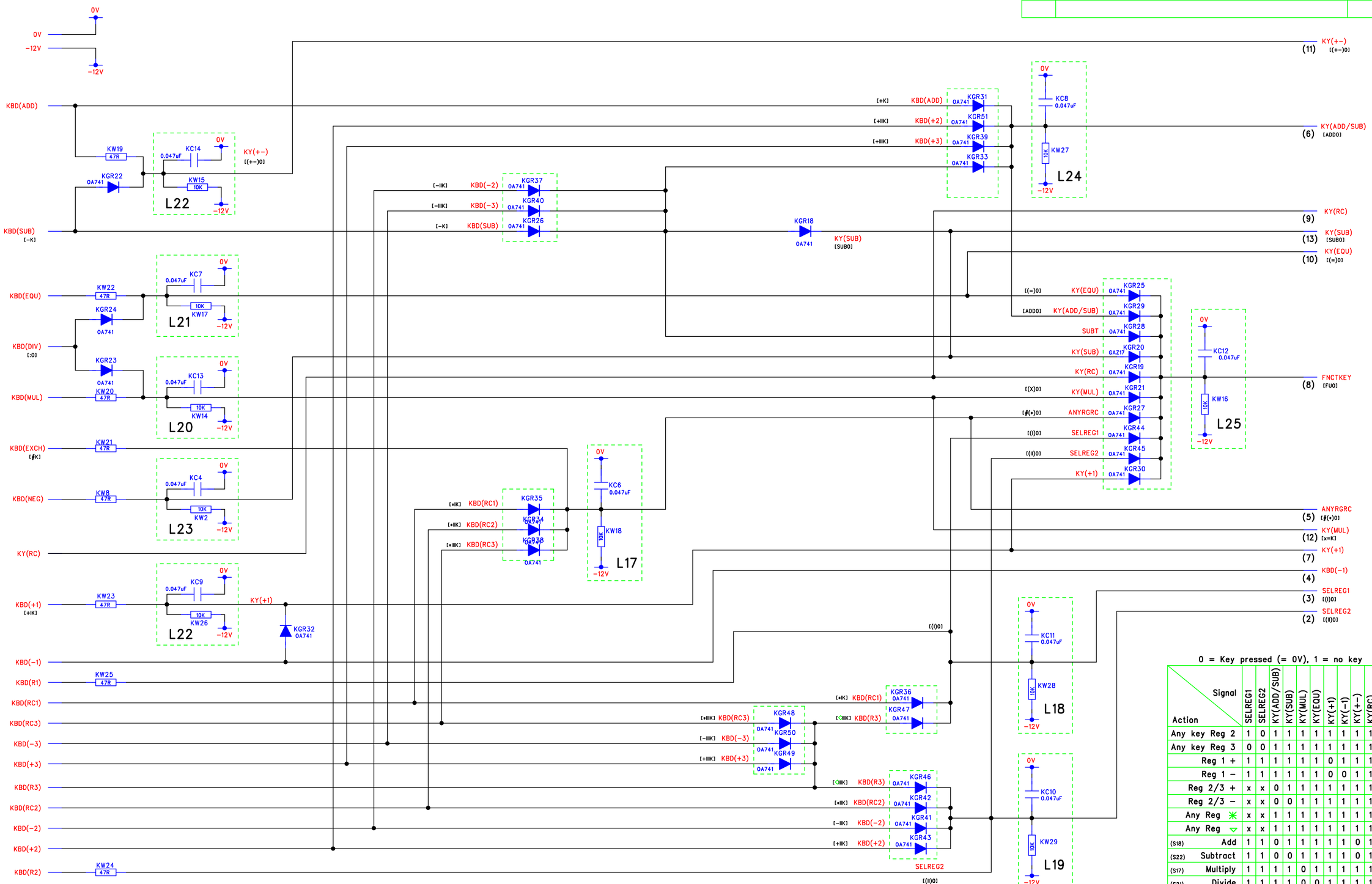

0 = Key pressed (= 0V), 1 = no key

Action \ Signal	SELREG1	SELREG2	KY(ADD/SUB)	KY(SUB)	KY(MUL)	KY(EQU)	KY(+1)	KY(−1)	KY(+−)	KY(RC)	ANYRGRC	FNCTKEY
Any key Reg 2	1	0	1	1	1	1	1	1	1	1	1	0
Any key Reg 3	0	0	1	1	1	1	1	1	1	1	1	0
Reg 1 +	1	1	1	1	1	1	0	1	1	1	1	0
Reg 1 −	1	1	1	1	1	1	0	0	1	1	1	0
Reg 2/3 +	x	x	0	1	1	1	1	1	1	1	1	0
Reg 2/3 −	x	x	0	0	1	1	1	1	1	1	1	0
Any Reg ✳	x	x	1	1	1	1	1	1	1	1	0	0
Any Reg ▽	x	x	1	1	1	1	1	1	1	1	1	0
(S18) Add	1	1	0	1	1	1	1	1	0	1	1	0
(S22) Subtract	1	1	0	0	1	1	1	1	0	1	1	0
(S17) Multiply	1	1	1	1	0	1	1	1	1	1	1	0
(S21) Divide	1	1	1	1	0	0	1	1	1	1	1	0
(S4) Negate	1	1	1	0	1	1	1	1	1	1	1	0
(S19) Recall	1	1	1	1	1	1	1	1	1	0	1	0
(S16) Exchange	1	1	1	1	1	1	1	1	1	1	0	0
(S20) Equal	1	1	1	1	1	0	1	1	1	1	1	0

Function & Register Key Encoder

These diagrams are referenced to 0V – Logical 1 = −12V, logical 0 = 0V

© 2017 Mike Hatch. (www.soemtron.org)

DM Associates
33, Northbrook Road
Aldershot, Hampshire. GU11 3HE
Email: mike@soemtron.org
www.soemtron.org

Pcb Dwg # =			Scale	Nts
	Name	Date	Sheet	2
Drawn	MD Hatch	28/02/2024	Next Sheet	3
Checked	–	–	Drawing Number	Soemtron 222

Title: Soemtron ETR 222 Calculator
Keyboard Function Encoding
Circuit Diagram

A2 | Issue | A